Honeywell

krom schroder

Burner control unit BCU 440

Technical Information · GB
6 Edition 01.17

- Automatic burner control unit, ignition transformer, indicators and operating controls in a space-saving metal housing which replaces the local burner control cabinet
- For directly ignited burners of up to 350 kW in continuous operation pursuant to EN 746-2
- Display of the program status, unit parameters and flame signal; Manual mode for burner adjustment and for diagnostic purposes
- Visualisation and adaptation to the specific application via the PC programming and diagnostic software BCSoft to simplify logistics management.

ПРОМЭЛЕКТРОНИКА / sales@prom-elec.com

Contents

Burner control unit BCU 440 1
Contents 2
1 Application 4
1.1 Examples of application 6
1.1.1 Atmospheric burners 6
1.1.2 BCU 440: Modulating-controlled burner 7
2 Certification 8
3 Function 9
3.1 Connection diagram 9
3.1.1 Zonal series wiring 10
3.2 Program sequence 11
3.3 Program status and fault messages 12
4 Parameters 13
4.1 Scanning the parameters 13
4.2 Flame control 14
4.2.1 Burner flame signal 14
4.2.2 Switch-off threshold of the flame amplifier 14
4.3 Behaviour during start-up 14
4.3.1 Safety time on start-up t_{SA} 14
4.4 Behaviour during operation 15
4.4.1 Safety time during operation t_{SB} 15
4.4.2 Fault lock-out or restart 15
4.4.3 Program status when the most recent fault occurred 17
5 Selection 18
5.1 Selection table 18
5.1.1 Type code 18
6 Project planning information 19
6.1 Cable selection 19
6.1.1 Ionization cable 19
6.1.2 Ignition cable 19
6.2 Spark electrode 19
6.2.1 Electrode gap 19
6.2.2 Star electrodes 19
6.3 Calculating the safety time t_{SA} 20
6.4 Safety interlocks (Limits) 21
6.5 Protection of safety-relevant outputs 21
6.6 Reset 22
6.6.1 Parallel reset 22
6.6.2 Permanent remote reset 22
6.6.3 Automatic remote reset (PLC) 22
6.6.4 Burner start 22
6.6.5 Restart and start-up attempts 22
6.7 Emergency stop 23
6.7.1 In the event of fire or electric shock 23
6.7.2 Triggered by the safety interlock (limits) 23
6.8 Fault signalling 23
6.9 Overload protection 23
6.10 Installation 23
6.11 Wiring 24
6.12 BCU switched off 24
6.13 Furnace control 24
6.14 Mains switch 24
6.15 Note on EC type-examination 24
6.16 Changing parameters 25
7 Flame control 26
8 Accessories 27
8.1 High-voltage cable 27
8.2 “Changed parameters” stickers 27
8.3 Radio interference suppressed electrode plugs 27
8.4 BCSoft 27
8.4.1 Opto-adapter PCO 200 27
8.4.2 Bluetooth adapter PCO 300 27
8.5 External securing bar 28
8.6 Fastening set 28

▼ = To be continued

9 Technical data 29
9.1 Safety-specific characteristic values 31
9.2 Housing dimensions 32
9.3 Operating controls 32
9.4 Installation 32
10 Legend 33
11 Glossary 34
11.1 Waiting time t_W 34
11.2 Safety time on start-up t_{SA} 34
11.3 Ignition time t_Z 34
11.4 Flame simulation/Flame simulation delay time t_{LV} 34
11.5 Safety time during operation t_{SB} 35
11.6 Flame signal 35
11.7 Fault lock-out 35
11.8 Safety interlocks (Limits) 35
11.9 Gas valve V1 35
11.10 Continuous operation 35
11.11 Diagnostic coverage DC 36
11.12 Operating mode 36
11.13 Safe failure fraction SFF 36
11.14 Probability of dangerous failure PFH_D 36
11.15 Mean time to dangerous failure $MTTF_d$ 36
Feedback 37
Contact 37

▼ = To be continued

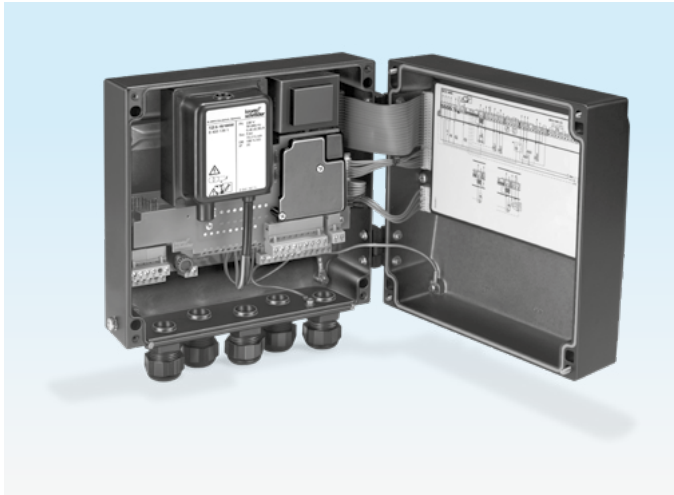

The BCU unites the functionally interrelated components of automatic burner control unit, ignition transformer, Manual/Automatic mode and display of operating and fault statuses in a compact metal housing.

1 Application

Burner control unit BCU 440 controls, ignites and monitors gas burners in Continuous operation.

It can be used for directly ignited industrial burners of up to 350 kW. The BCU is installed near the burner to be monitored.

The program status, the unit parameters and the level of the flame signal can be read directly from the unit.

If the local requirements on the burner control unit change, the PC software BCSoft can be adjusted to the unit parameters of the application by using the optical interface.

The service personnel is supported by a convenient visualisation system of the input and output signals and the error history.

Roller hearth kiln in the ceramics industry

Chamber kiln

Roller hearth kiln

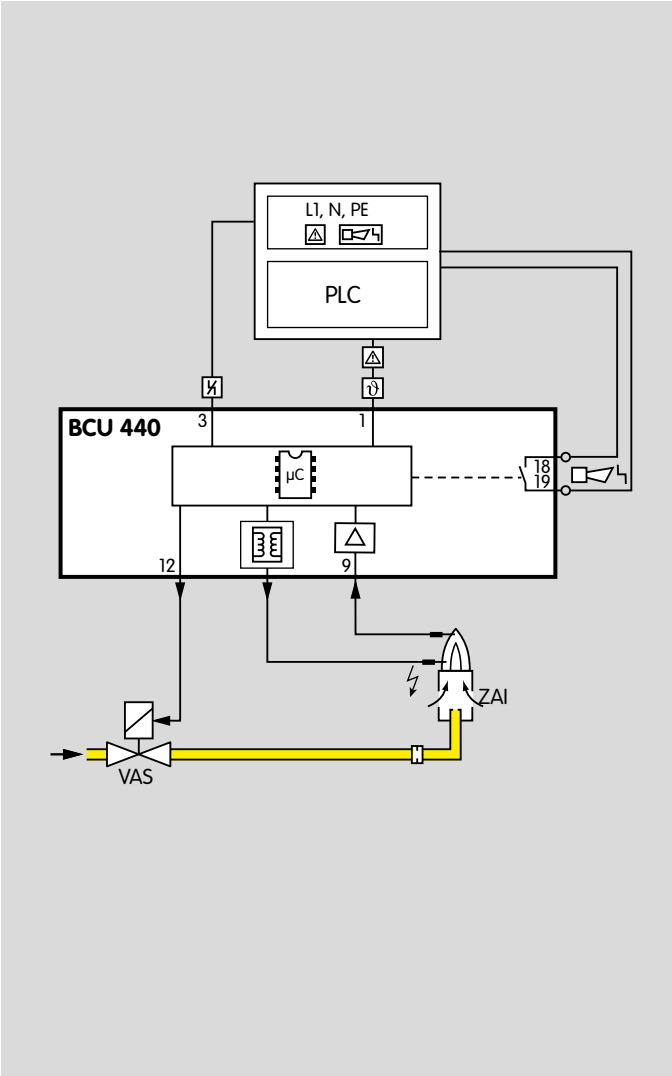

1.1 Examples of application

1.1.1 Atmospheric burners

Control: ON/OFF

The burner is ignited by the spark electrode and is monitored by the flame rod. In the event of a flame failure during start-up, an immediate fault lock-out occurs. In the event of a flame failure during operation, an immediate fault lock-out or a restart occurs, depending on the unit parameter settings.

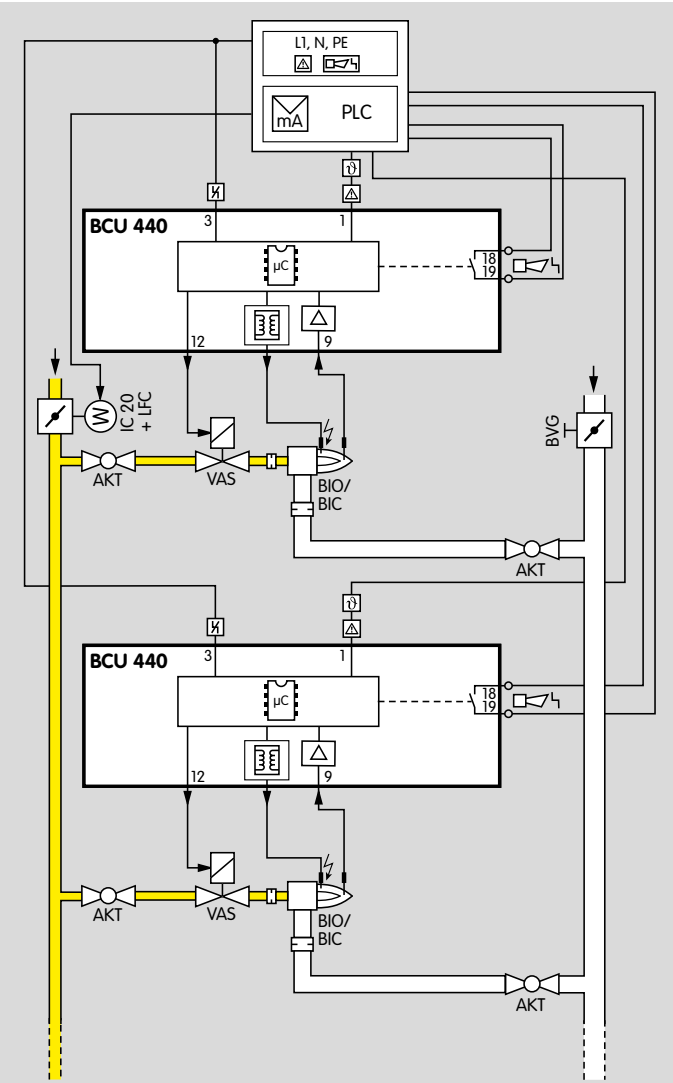

1.1.2 BCU 440: Modulating-controlled burner

Control: continuous.

Modulating control of the gas flow rate with a constant air flow rate. The burners start at low-fire rate, and the actuator IC 20 controls the burner capacity via the linear flow control LFC after the operating state has been signalled.

2 Certification

Certificates – see Docuthek.

Certified pursuant to SIL

For systems up to SIL 3 pursuant to EN 61508.

Pursuant to EN ISO 13849-1:2006, the BCU can be used up to PL e.

EU certified pursuant to

- Gas Appliances Directive (2009/142/EC) in conjunction with EN 298:2012

Meets the requirements of the

- Low Voltage Directive (2014/35/EU),
- EMC Directive (2014/30/EU).

ANSI/CSA approved

American National Standards Institute/Canadian Standards Association – ANSI Z21.20/CSA C22.2, No. UL 199/UL 372

www.csagroup.org – Class number: 3335-01 and 3335-81.

FM approved

Factory Mutual Research Class: 7610 “Combustion Safeguards and Flame Sensing Systems”.

Suitable for applications pursuant to NFPA 86.

www.approvalguide.com

AGA approved

Australian Gas Association, Approval No.: 6478

http://www.aga.asn.au/product_directory

Eurasian Customs Union

The product BCU 440 meets the technical specifications of the Eurasian Customs Union.

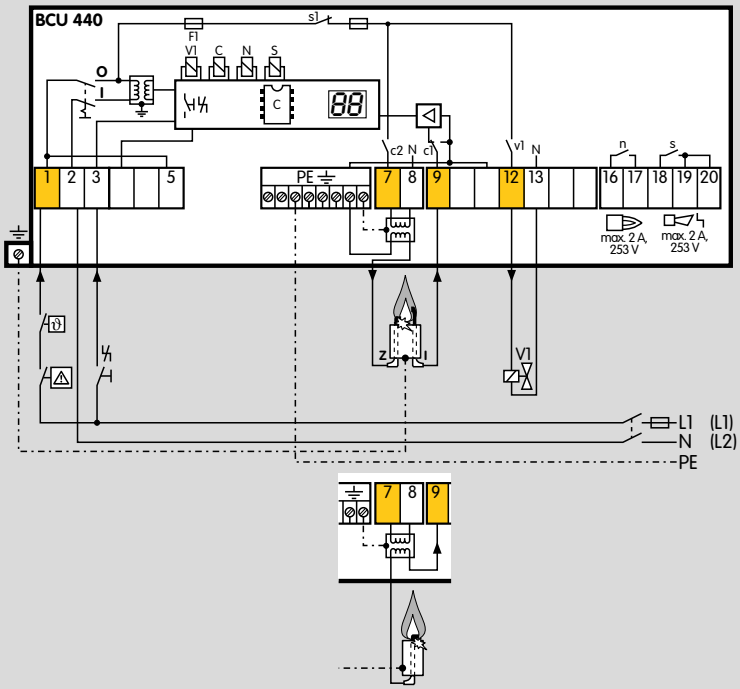

3 Function

3.1 Connection diagram

For cable selection and wiring, see page 19 (Project planning information).

For the explanation of symbols, see page 33 (Legend).

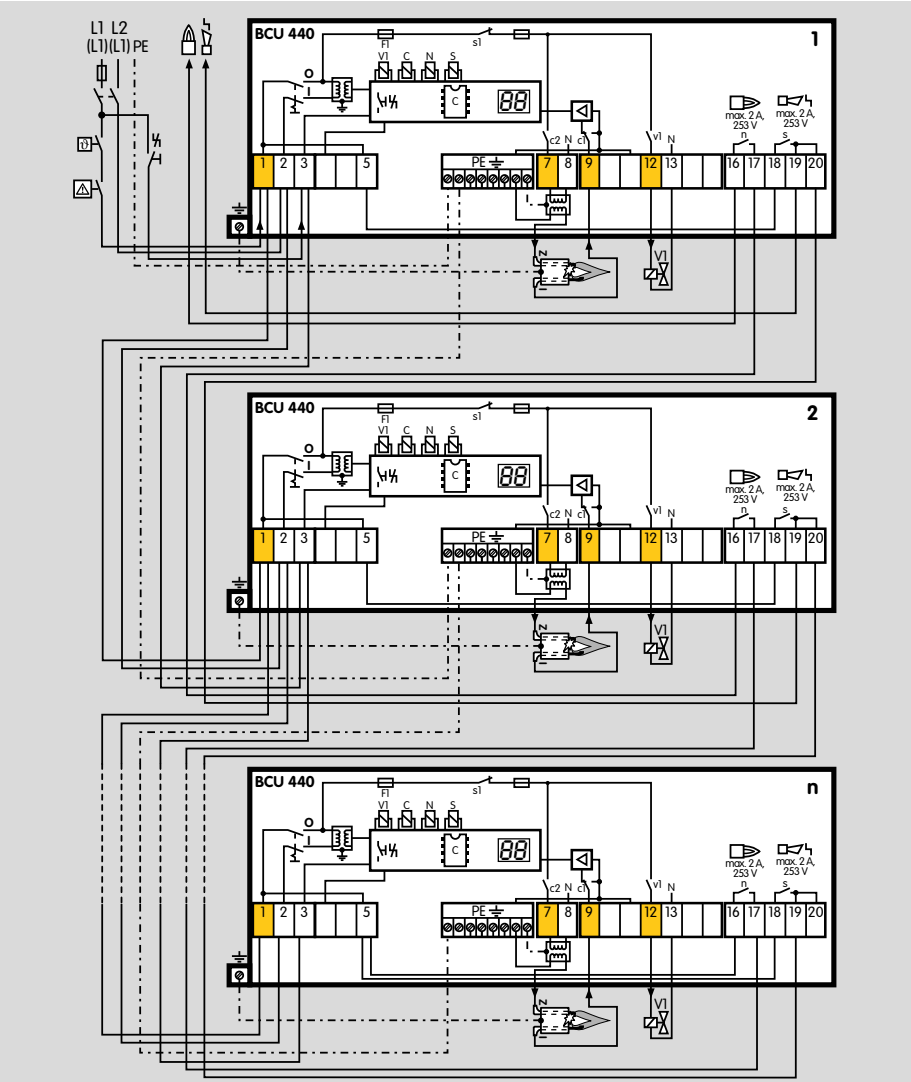

3.1.1 Zonal series wiring

For cable selection and wiring, see page 19 (Project planning information).

For the explanation of symbols, see page 33 (Legend).

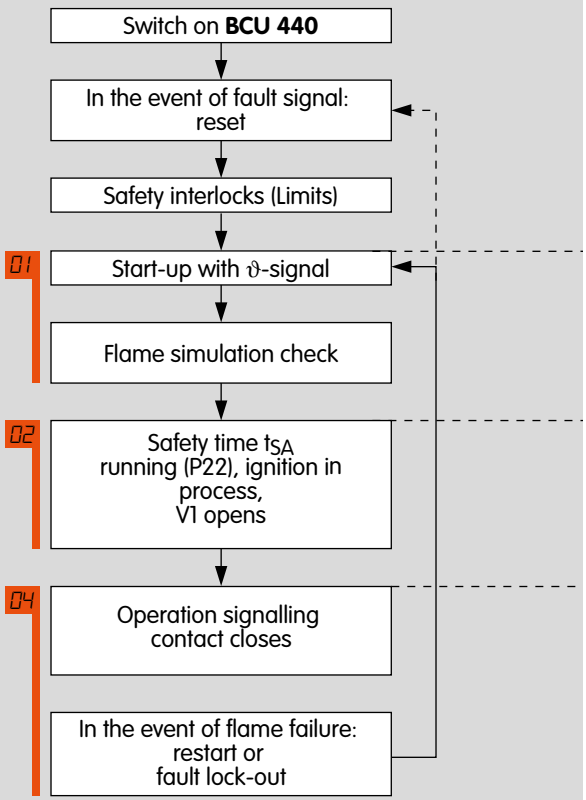

3.2 Program sequence

Normal start-up

If an "old" fault is still being signalled after switching on, it will be necessary to reset this first.

When the safety interlocks are closed, the burner can be started with the start-up signal (ϑ).

The flame simulation check is conducted during the waiting time, once mains voltage has been applied.

After the waiting time, the BCU opens valve V1 and ignites the burner. The ignition time t_Z is constant.

If a flame is detected during the safety time t_{SA}, the operation signalling contact between terminals 16 and 17 closes. This completes start-up.

The burner can also be started manually with the aid of the switch on the BCU. Voltage must be applied continuously to terminal 1 in order for this to occur.

Start-up without flame signal

If no flame is detected during the safety time t_{SA}, a fault lock-out occurs.

Behaviour in the event of flame failure during operation

If the flame fails during operation, either an immediate fault lock-out or a restart occurs. This procedure can be set via the optical interface (parameter 12, "Burner restart").

3.3 Program status and fault messages

During operation, the 7-segment display shows the program status. In the event of a fault, the BCU halts the program run, the display blinks and it then displays the cause of the fault. The burner control unit can be reset using the Reset button or the remote reset.

Program status	DISPLAY	Fault message (blinking)
Waiting time/Pause time	01	Flame simulation
Safety time on start-up	02	Start-up without flame signal
Operation	04	Flame failure during operation
	10	Too many remote resets
	50	Fuse F1 defective
	52	Permanent remote reset

4 Parameters

Description	Parameter	Value range	Factory default setting	Adjustable*
Burner flame signal	01	0 – 99 µA		
Program status when the most recent fault occurred	03	x0 – x8		
Switch-off threshold of the flame amplifier	04	1 – 20 µA	1 µA	●
Fault lock-out or restart	12	0; 1	0	●
Safety time during operation t_{SB}	14	1; 2 s	1 s	
Safety time on start-up t_{SA}	22	3; 5; 10 s		

** Adjustable using BCSoft software and a PC opto-adapter.*
0 = Function inactive
1 = Function active

On parameterisation, ensure that the program sequence started matches the application. This parameter may be set in this way only if the burner can restart as intended in all operating phases.

4.1 Scanning the parameters

During operation, the 7-segment display shows the program status, see page 12 (Program status and fault messages)

The flame signal and all following parameters of the BCU can be scanned one after the other by repeatedly pressing the Reset/Information button (for 2 s).

In the event of a fault, the BCU halts the program run, the display blinks and it then displays the cause of the fault in coded form.

4.2 Flame control

4.2.1 Burner flame signal

Parameter 01

Flame signal of the burner, display in µA, measuring range: 0 – 30 µA.

4.2.2 Switch-off threshold of the flame amplifier

Parameter 04

The sensitivity at which the burner control unit still detects a flame can be set between 1 and 20 µA.

The measured flame signal of the system's "own" burner should be at least 3 µA (empirical value) higher than the set switch-off threshold.

4.3 Behaviour during start-up

4.3.1 Safety time on start-up t_{SA}

Parameter 22

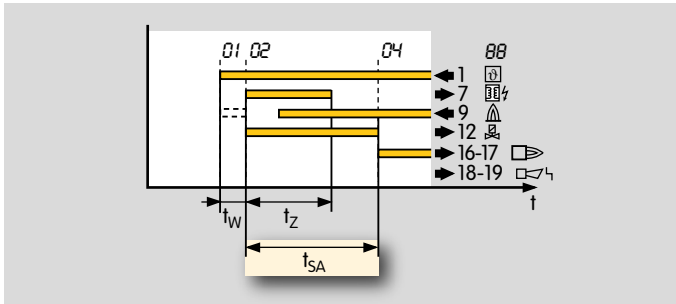

This indicates the safety time on start-up t_{SA} for the burner.

4.4 Behaviour during operation

4.4.1 Safety time during operation t_{SB}

Parameter 14

This indicates the safety time during operation t_{SB} for valve V1.

The default in accordance with EN 298 is 1 s.

The BCU has also the available option of t_{SB} of 2 s. Prolonging the time increases the installation availability in the case of brief-duration signal fades (e.g. fades of the flame signal).

In accordance with EN 746-2, the safety time of the installation during operation (including closing time of the valves) may not exceed 3 s.

Note the requirements of the Standards!

4.4.2 Fault lock-out or restart

Parameter 12

This parameter determines whether the BCU starts a one-off restart or performs an immediate fault lock-out for the burner after an installation fault (flame failure or failure of air flow).

Immediate fault lock-out after installation fault

Parameter 12 = 0: Fault lock-out after installation fault.

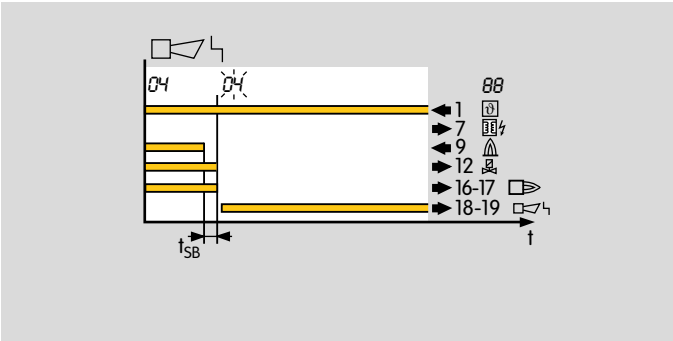

After an installation fault (flame failure), the burner control unit performs a fault lock-out within the safety time during operation t_{SB}. This involves disconnecting the power from the gas valve and, if applicable, the ignition transformer. The fault signalling contact closes, the display blinks and shows the current program status, see table on page 12 (Program status and fault messages).

After a fault lock-out, the burner control unit can be reset, either with the button on the front panel or using an external button. Several burner control units can be reset in parallel using the external button.

The BCU cannot be reset by mains failure. The fault signalling contact does, however, open as soon as the mains voltage fails.

Restart following flame failure

Parameter 12 = 1: Restart after installation fault.

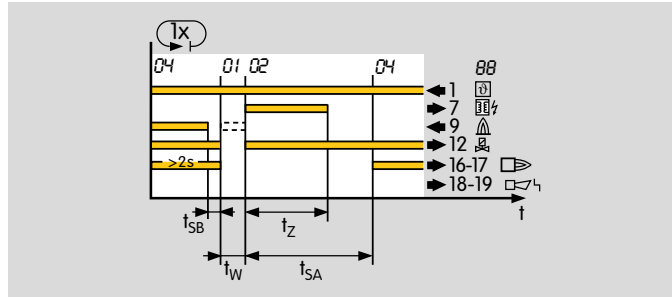

If the BCU detects an installation fault (flame failure) after a minimum operating time of 2 s, the valves are closed and the operation signalling contact is opened within time t_{SB}.

The burner control unit now attempts to restart the burner once. If the burner does not function, a fault lock-out occurs. The display blinks and shows the cause of the fault.

In accordance with EN 746-2, a restart may be conducted only if the safety of the installation is not impaired. Restart is recommended for burners which occasionally display unstable behaviour during operation.

The precondition for a restart is that activation of the restart allows the burner to restart as intended (in all operating phases). In this case, it must be ensured that the program sequence started by the BCU matches the application.

4.4.3 Program status when the most recent fault occurred

Parameter 03

This indicates the program status in which the last burner fault occurred.

Example: The unit indicates that fuse F1 is defective with a blinking 50.

Parameter 03 can now be used to scan in what program status the BCU was when the fault was detected.

5 Selection

5.1 Selection table

	-3	-5	-10	/1	/2	W	R	1	2	3	4	GB
BCU 440	●	●	●	●	●	●	●	●	●	●	●	●

● = *standard*, ○ = *available*

Order example

BCU 440-3/1W1GB

5.1.1 Type code

Code	Description
BCU	Burner control unit
4	Series 4
40	Basic version 40
	Safety time on start-up tSA [s]
-3	3
-5	5
-10	10
	Safety time in operation [s]
/1	1
/2	2
	Mains voltage
W	230 V AC, -15/+10%, 50/60 Hz
R	115 V AC, -15/+10%, 50/60 Hz
	Ignition transformer
1	TZI 5-15/100
2	TZI 7-25/20
3	TZI 7,5-12/100
4	TZI 7,5-20/33
GB	Front film in English with additional stickers in D, F, I, NL, E

6 Project planning information

6.1 Cable selection

Use mains cable suitable for the type of operation and complying with local regulations.

Signal and control line: max. 2.5 mm^2.

Cable for burner ground/PE wire: 4 mm^2.

Burner ground connector may also be located outdoors.

Do not route BCU cables in the same cable duct as frequency converter cables or cables emitting strong fields.

6.1.1 Ionization cable

Use unscreened high-voltage cable, see page 27 (Accessories).

Recommended cable length: max. 50 m.

Lay cable individually and, if possible, not in a metal conduit.

Install well away from mains cables and interference from electro-magnetic sources.

Do not lay together with ignition cable.

6.1.2 Ignition cable

Use unscreened high-voltage cable, see page 27 (Accessories).

Cable length for internal ignition: max. 5 m (16.4 ft).

External electrical interference must be avoided. The longer the ignition cable, the lower the ignition capacity.

Lay cable individually and, if possible, not in a metal conduit.

Do not lay UV/ionization cable and ignition cable together and lay them as far apart as possible.

Screw the ignition cable securely into the ignition transformer and feed it out of the unit on the shortest possible route (no loops) – use the left-hand M20 plastic cable gland.

Only use radio interference suppressed terminal boots (with 1 kΩ resistor) for spark electrodes, see page 27 (Accessories).

6.2 Spark electrode

6.2.1 Electrode gap

Gap between electrode and burner ground:

2 mm ± 0.5 mm.

6.2.2 Star electrodes

We recommend using 7.5 kV ignition transformers on burners with star electrodes.

6.3 Calculating the safety time t_{SA}

6.4 Safety interlocks (Limits)

The limiters in the safety interlock (linking of all the relevant safety control and switching equipment for the use of the application, e.g. safety temperature limiter, minimum and maximum gas pressure, tightness control) must isolate terminal 1 from the voltage supply. If fuse F1 has tripped, this is indicated by a blinking 50 on the display.

If the safety interlocks fail, an immediate program abort with switch-off of all outputs occurs (even during the safety time). If the safety interlocks are operational again or the unit is switched back on, the program run is restarted in standby.

6.5 Protection of safety-relevant outputs

When commissioning, do not switch the safety-relevant outputs to a short-circuit.

Before switching on, ensure that outputs 7 and 12 are not overloaded (> 3 A), using an ohmmeter, for example.

All safety-relevant outputs of the BCU are fused with an internal, non-replaceable fuse see, 9 (Connection diagram). This affects the outputs for ignition and gas valve V1. In the event that the internal fuse for these outputs blows, the unit must be sent to the manufacturer for repair.

6.6 Reset

6.6.1 Parallel reset

Several burner control units can be reset in parallel using the external button. The BCU cannot be reset by mains failure.

6.6.2 Permanent remote reset

Permanent remote reset gives rise to a malfunction. If a remote reset signal is permanently applied to terminal 3, 52 flashes on the display to indicate a fault.

Reset with a pulse < 1 s.

6.6.3 Automatic remote reset (PLC)

In the case of automatic remote reset (PLC), the reset pulse duration should not exceed 1 second. Check compliance with Standards.

If a fault is acknowledged by remote reset too often, error 10 (Too many remote resets) is displayed. The error can only be acknowledged with the Reset/Information button on the unit.

The burner malfunction must be remedied. The malfunction can not be remedied by changing the method of activation.

6.6.4 Burner start

A furnace start may only be initiated, if it has been ensured using an appropriate procedure that there is no combustible mixture in the burner tile/processing chamber, in the connected areas or in the exhaust gas system (heat exchanger, dust collector). This can be achieved by pre-purge, which occurs immediately before ignition or within the period specified in the operating instructions.

In the case of multiple burner applications, pre-purge is not necessary after a controlled burner shut-down.

Note the requirements of the Standards. For exceptions, see Standards.

6.6.5 Restart and start-up attempts

The precondition for a restart/start-up attempt is that activation of the restart allows the burner to restart as intended (in all operating phases). In this case, it must be ensured that the program sequence started by the BCU matches the application.

Note the requirements of the Standards. For exceptions, see Standards.

6.7 Emergency stop

6.7.1 In the event of fire or electric shock

If there is a risk of fire, electric shock or similar, inputs L1 and N of the BCU should be disconnected from the electrical power supply – this should be reflected in the wiring on site.

6.7.2 Triggered by the safety interlock (limits)

The safety interlock turns off the power to the input 1, such as in the event of low air pressure or similar.

6.8 Fault signalling

The fault signalling contact opens, as soon as the mains voltage fails.

6.9 Overload protection

To protect the unit against overload by frequent cycling, only a specific number of start-up attempts can be carried out by the BCU 440. On the BCU 440, a minimum timing cycle of 2 minutes must be ensured on site.

6.10 Installation

Recommended installation position: vertical (cable glands pointing downwards).

When installing, ensure that there is sufficient space to open the BCU.

From inside

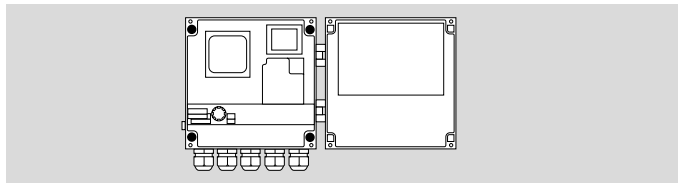

Open BCU and screw on with four screws (Ø 4 mm, min. length 15 mm).

From outside

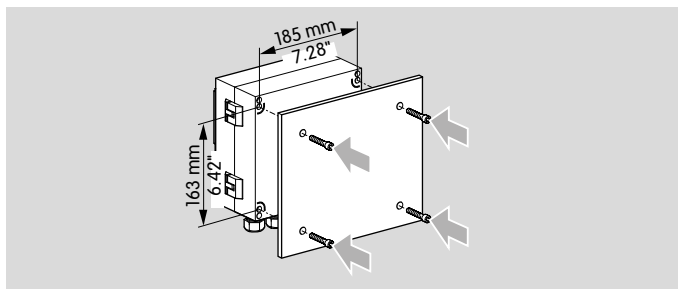

Screw on the closed unit to the rear with 4 self-tapping screws (enclosed).

Otherwise, mount with external securing bars or fastening set, see page 27 (Accessories).

6.11 Wiring

Electrical connection via plug-in connection terminals (2.5 mm²) and plug-in cable glands. The latter can be removed in order to facilitate installation. The BCU is suitable for hard wiring only. Do not reverse phase and neutral conductor. Different phases of a three-phase current system must not be installed at the BCU. No voltage may be connected to the valve and ignition outputs.

6.12 BCU switched off

In general, the BCU cannot be activated when no mains voltage is applied or the burner control unit is switched off. The fault signalling contact is only closed when the unit is supplied with voltage and switched on.

If the unit is switched off, an immediate program abort with switch-off of all outputs occurs (even during the safety time). When the unit is switched on, the program run is restarted in standby.

6.13 Furnace control

Switch on the system to start up the furnace, then release the burner start via the safety interlocks and afterwards start the burner control so that the burner control unit may monitor the burners as intended. To shut down the furnace, first disconnect the burner control unit from the temperature control (burner ON signal), then disconnect the safety interlocks and finally switch off the system.

6.14 Mains switch

The mains switch in the unit isolates the BCU on two poles from the mains. It does not meet the requirements of
EN 50156-1:2004 for a device to disconnect the power supply.

Although the mains switch cannot be used for disconnecting from the electrical power supply in accordance with EN 50156, it does allow the burner to be isolated functionally from the central control system. This function is required for manual operation.

Disconnection for electrical maintenance work is to be implemented with an external switch per unit or group only, in accordance with Standard EN 50156.

6.15 Note on EC type-examination

Since EN 298 (1993) does not describe all functions of the BCU, the operator is responsible for ensuring that all parameters and functions are matched to the respective application.

6.16 Changing parameters

In certain cases, it may be necessary to change the default settings. Using a separate software package and a PC opto-adapter, it is possible to modify certain parameters on the BCU, such as the switch-off threshold of the flame amplifier or the behaviour in the event of a flame failure.

The software package with PC opto-adapter, as well as "Changed parameters" stickers, are available as accessories, see page 27 (Accessories).

The unit parameters set at the factory are specified in the enclosed delivery note.

Document changed parameters in BCSoft using the protocol function and enclose the protocol with the plant documentation.

If a replacement is ordered for a BCU with changed parameters, refer to the protocol for details.

7 Flame control

With ionisation sensor

The BCU generates an alternating voltage (230 V AC) between the sensing electrode and burner ground. The flame rectifies this voltage. Only the DC signal (> 1 µA) is detected by the burner control unit.

A flame cannot be simulated. Ignition and monitoring with a single electrode is possible.

8 Accessories

8.1 High-voltage cable

FZLSi 1/7 up to 180°C,
Order No. 04250410.

FZLK 1/7 up to 80°C,
Order No. 04250409.

8.2“Changed parameters” stickers

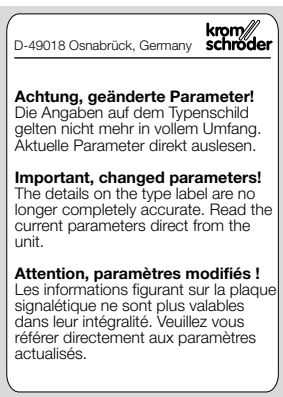

Affix below the type label on the BCU following changes to unit parameters set at the factory.

100 pcs,
Order No. 74921492.

8.3 Radio interference suppressed electrode plugs

Right-angle terminal boot, 4 mm, interference-suppressed, Order No.: 04115308.

Straight terminal boot, 4 mm, interference-suppressed, Order No.: 04115307.

Straight terminal boot, 6 mm, interference-suppressed, Order No.: 04115306.

8.4 BCSoft

The current software can be downloaded from our Internet site at www.docuthek.com. To do so, you need to register in the DOCUTHEK.

8.4.1 Opto-adapter PCO 200

Including BCSoft CD-ROM,
Order No.: 74960625.

8.4.2 Bluetooth adapter PCO 300

Including BCSoft CD-ROM,
Order No.: 74960617.

8.5 External securing bar

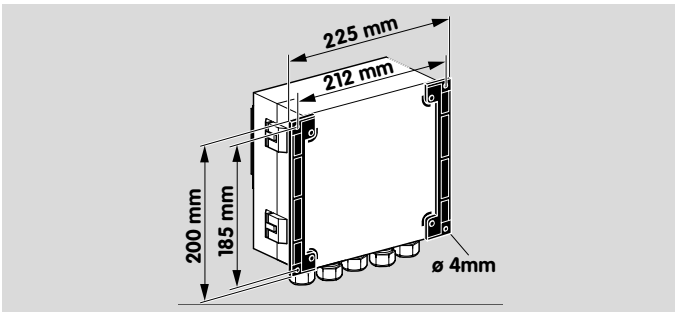

Order No. 74960414

8.6 Fastening set

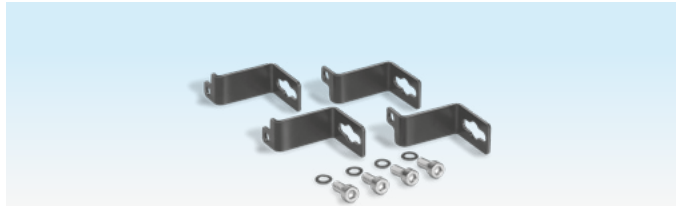

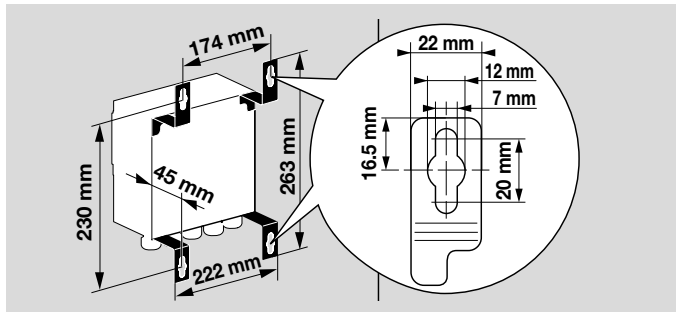

Order No. 74960422

9 Technical data

Mains voltage:
230 V AC. -15/+10%. 50/60 Hz.
115 V AC. -15/+10%. 50/60 Hz.
for grounded and ungrounded mains.

Voltage to inputs and valve = mains voltage.

Signal and control line: max. 2.5 mm^2 (AWG 14).

Cable for burner ground/PE wire: 4 mm^2 (AWG 12).

Cable gland: 5 cable glands with multiple seal inserts for cable diameters of up to 7 mm,
Each BCU is supplied for two cable glands with one seal insert each for cable diameters between 7 and 12 mm.

Input voltage of signal inputs:

Rated value	115 V AC	230 V AC
Signal „1“	80 – 126,5	160 – 253
Signal „0“	0 – 20	0 – 40
Frequenz	50/60 Hz	50/60 Hz

Inherent current:

Signal „1“	typ. 2 mA

Power consumption: approx. 9 VA plus inherent consumption of the integrated ignition transformer (50/60 Hz).

Inherent consumption of ignition transformer:

Ignition transformer	Input			Output	
	V AC	Hz*	A*	V	mA*
TZI 5-15/100W	230	50 (60)	0,45 (0,35)	5000	15 (11)
TZI 7-25/20W	230	50 (60)	1,1 (0,8)	7000	25 (18)
TZI 7,5-12/100W	230	50 (60)	0,6 (0,45)	7500	12 (9)
TZI 7,5-20/33W	230	50 (60)	0,9 (0,7)	7500	20 (15)
TZI 5-15/100R	115	50 (60)	0,9 (0,7)	5000	15 (11)
TZI 7-25/20R	115	50 (60)	2,2 (1,6)	7000	25 (18)
TZI 7,5-12/100R	115	50 (60)	1,2 (0,9)	7500	12 (9)
TZI 7,5-20/33R	115	50 (60)	1,8 (1,35)	7500	20 (15)
** Values in ( ) apply to 60 Hz.*					

Output current:

max. 1 A, cos φ = 1, for the valve outputs (or SRC outputs), but total current for valves and ignition transformer: max. 2.5 A.

Fail-safe inputs and outputs:

All the inputs and outputs marked “■”, see page 9 (Connection diagram) may be used for safety tasks.

Operation and fault signalling contacts:

Signalling contact for mains voltage, max. 2 A, 253 V, not internally fused.

Flame control: sensor voltage approx. 230 V AC,
sensor current > 1 µA.

Length of sensor cable: max. 5 m (16.4 ft).

Fuses in unit:
F1: 3.15 A, slow-acting, H, pursuant to IEC 127-2/5,
Fuse for protecting the safety-relevant ignition and
valve 1 outputs (terminals 7 and 12):

Ambient temperature: -20 to +60°C (-4 to +140°F),
climate: no condensation permitted.

Enclosure: IP 54 pursuant to IEC 529.

Number of operating cycles:
Relay outputs: 250,000 pursuant to EN 298,
Mains switch: 1,000,
Reset/Information button: 1,000.

Weight: approx. 5 kg (11 lb) depending on version.

9.1 Safety-specific characteristic values

In the case of ionization control, suitable for Safety Integrity Level	SIL 3
Diagnostic coverage DC	92.7%
Type of subsystem	Type B to EN 61508-2, 7.4.3.1.4
Operating mode	High demand mode pursuant to EN 61508-4, 3.5.12
Mean probability of dangerous failure PFH_D	1.92×10^{-8} 1/h
Mean time to dangerous failure $MTTF_d$	$MTTF_d = 1/PFH_D$
Safe failure fraction SFF	98.8%

The specified values apply for the combination with flame rod (sensor) and a unit of the BCU 400 series.

No characteristic values are available for flame control with UVS sensor.

For flame control in continuous operation using a UV sensor UVD 1 or a flame detector UVC 1, safety-specific characteristic values are available for the Safety Integrity Level SIL. Further information can be found in TI UVD 1 or TI UVC 1 in the Docuthek.

Relationship between the Performance Level (PL) and the Safety Integrity Level (SIL)

PL	SIL
a	–
b	1
c	1
d	2
e	3

Pursuant to EN ISO 13849-1:2006, Table 4, the BCU can be used up to PL e.

Max. service life under operating conditions:
20 years after date of production.

For a glossary of terms, see page 34 (Glossary).

For further information on SIL/PL, see www.k-sil.de

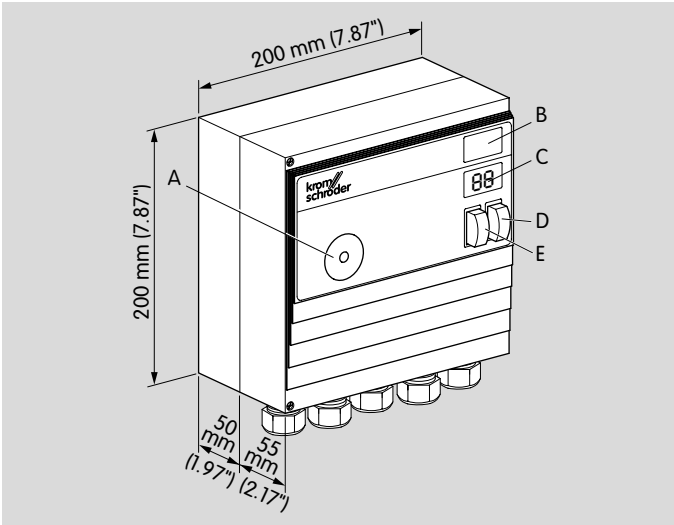

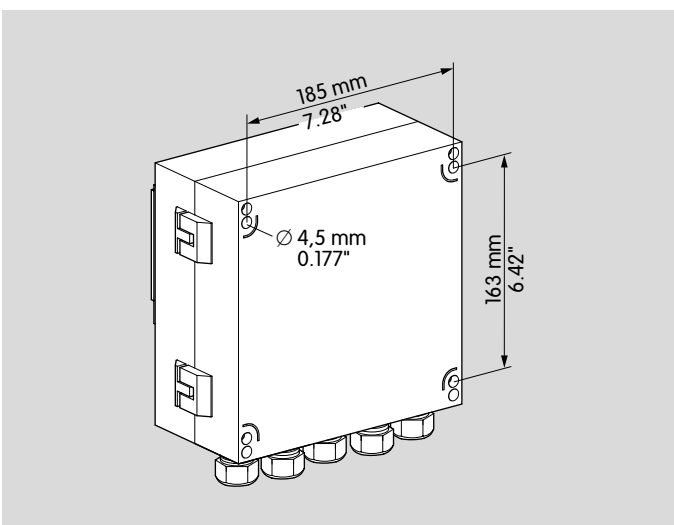

9.2 Housing dimensions

Die-cast aluminium housing with plug-in terminal blocks and plug-in M20 cable glands or (16-pin) plug connector for input signals and optionally pre-assembled cables for output signals.

9.3 Operating controls

A: Optical interface.

B: Labelling field for individual labelling of the system components.

C: 2-digit 7-segment display.

D: Mains switch to isolate the BCU on two poles from the mains.

E: Reset/Information button to reset the system after a fault or to scan parameters on the display.

9.4 Installation

Recommended installation position: vertical (cable glands pointing downwards).

Open the BCU and attach with four screws Ø 4 mm or screw on the closed unit using the external securing bar, see page 27 (Accessories).

Electrical connection via plug-in connection terminals (2.5 mm²) and plug-in cable glands. The latter can be removed in order to facilitate installation. When installing, ensure that there is sufficient space to open the BCU.

10 Legend

88	Display
88	Blinking display
	Ready
	Safety interlocks (Limits)
	Burner start-up signal
	Ignition transformer
	Gas valve
	Air valve
P	Purge
A	Ext. air valve control
	Flame signal
	Burner operating signal
	Fault signal
	Reset
	Input signal
	Output signal
	Flame simulation check
t_W	Waiting time ≥ 2 s
t_{SA}	Safety time on start-up 3 s, 5 s or 10 s
t_{SB}	Safety time during operation < 1 s or < 2 s
t_Z	Ignition time 2 s, 3 s or 6 s
t_{LV}	Flame simulation delay time 25 s
	Input/Output safety circuit

11 Glossary

11.1 Waiting time t_W

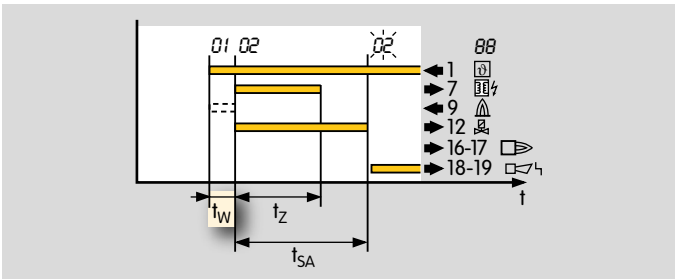

Once the start-up signal ϑ has been applied, the waiting time t_W starts to elapse. During this time, a self-test is conducted to detect errors in internal and external circuit components. If no malfunction is detected, the burner will start up.

11.2 Safety time on start-up t_{SA}

This refers to the period of time between switching on and switching off of the pilot gas valve V1, when no flame signal is detected. The safety time on start-up t_{SA} (3, 5 or 10 s) is the minimum operating time of the burner and burner control unit.

11.3 Ignition time t_Z

If no malfunction is detected during the waiting time t_W, the ignition time t_Z then starts to elapse. Voltage is supplied to the pilot gas valve V1 and the ignition transformer and the burner is ignited. The duration of the ignition time is either 2, 3 or 7 seconds, depending on safety time t_{SA} selected.

11.4 Flame simulation/Flame simulation delay time t_{LV}

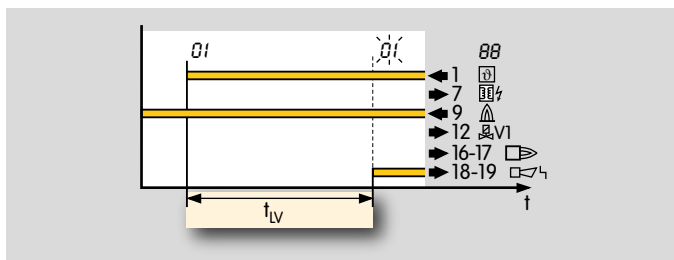

An extraneous signal (flame simulation) is a flame signal that is detected, although there should be no flame according to the program sequence. If such an extraneous signal is detected, the flame simulation delay time t_{LV} starts to elapse. If the flame simulation is discontinued during the flame simulation delay time t_{LV}, start-up can be initiated or operation continued. Otherwise, a fault lock-out occurs.

11.5 Safety time during operation t_{SB}

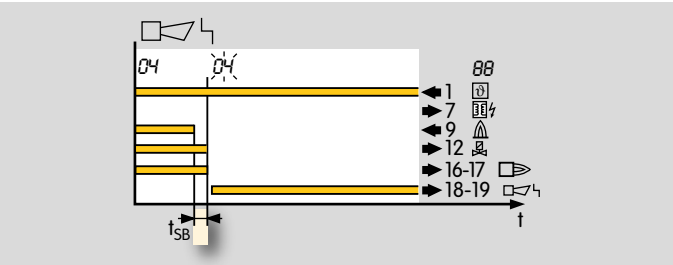

If the flame fails during operation, the valve outputs are disconnected within the safety time t_{SB}.

The default safety time during operation t_{SB} in accordance with EN 298 is 1 second. In accordance with EN 746-2, the safety time of the installation during operation (including closing time of the valves) may not exceed 3 s. Note the requirements of the Standards!

11.6 Flame signal

If a flame is detected, the flame detector will supply a flame signal.

11.7 Fault lock-out

In the event of a fault lock-out, the valve and the ignition transformer are disconnected from the electrical power supply, and a fault is signalled. Resetting must take place manually following a fault lock-out.

11.8 Safety interlocks (Limits)

The limiters in the safety interlock (linking of all the relevant safety control and switching equipment for the use of the application, e.g. safety temperature limiter, minimum/maximum gas pressure) must isolate input ⚠ from the voltage supply.

11.9 Gas valve V1

The start fuel flow rate for the burner is released by gas valve V1. It opens when the safety time on start-up t_{SA} starts to elapse. It remains open until the burner is switched off again by a controlled shut-down or fault lock-out.

11.10 Continuous operation

The gas burner runs continuously for more than 24 hours.

11.11 Diagnostic coverage DC

Measure of the effectiveness of diagnostics, which may be determined as the ratio between the failure rate of detected dangerous failures and the failure rate of total dangerous failures

NOTE: Diagnostic coverage can exist for the whole or parts of a safety-related system. For example, diagnostic coverage could exist for sensors and/or logic system and/or final elements. Unit: %.

from EN ISO 13849-1:2008

11.12 Operating mode

High demand mode or continuous mode

Operating mode, where the frequency of demands for operation made on a safety-related system is greater than one per year or greater than twice the proof-test frequency

from EN 61508-4:2001

11.13 Safe failure fraction SFF

Fraction of safe failures related to all failures, which are assumed to appear

from EN 13611/A2:2011

11.14 Probability of dangerous failure PFH_D

Value describing the likelihood of dangerous failure per hour of a component for high demand mode or continuous mode. Unit: 1/h.

from EN 13611/A2:2011

11.15 Mean time to dangerous failure $MTTF_d$

Expectation of the mean time to dangerous failure

from EN ISO 13849-1:2008

Feedback

Finally, we are offering you the opportunity to assess this “Technical Information (TI)” and to give us your opinion, so that we can improve our documents further and suit them to your needs.

Clarity

- ○ Found information quickly
- ○ Searched for a long time
- ◉ Didn’t find information
  - What is missing? dfbdfb
- ○ No answer

Comprehension

- ○ Coherent
- ○ Too complicated
- ○ No answer

Scope

- ○ Too little
- ◉ Sufficient
- ○ Too wide
- ○ No answer

Use

- ☐ To get to know the product
- ☐ To choose a product
- ☑ Planning
- ☐ To look for information

Navigation

- ○ I can find my way around
- ○ I got “lost”
- ◉ No answer

My scope of functions

- ○ Technical department
- ○ Sales
- ○ No answer

Remarks

dfbdfbdfb

Contact

Elster GmbH
Postfach 2809 · 49018 Osnabrück
Strotheweg 1 · 49504 Lotte (Büren)
Germany
Tel +49 541 1214-0
Fax +49 541 1214-370
hts.lotte@honeywell.com
www.kromschroeder.com

The current addresses of our international agents are available on the Internet:
www.kromschroeder.de/Weltweit.20.0.html?&L=1

We reserve the right to make technical modifications in the interests of progress.

Copyright © 2018 Elster GmbH
All rights reserved.

03250814