Baumer
Passion for Sensors

Profile sensors

OXH7-Z0150.HI0720.VI

Height Tool

Article number: 11159406

Overview

- height
- 100 … 150 mm
- pulsed red laser diode
- analog and RS 485
- Touch Display, RS485
- connector M12 8 pin
- -10 … 50 °C
- IP 67

Picture similar

Technical data

General data	
Type	Height
Version	PosCon OXH7
Measuring range (width)	48 … 72 mm
Measuring range (distance)	100 … 150 mm
Measuring frequency	570 Hz
Resolution	2 … 4 µm
Linearity error	± 30 … 90 µm
Temperature drift	± 0,04 % Sde/K
Power on indication	LED green
Light source	Pulsed red laser diode
Wave length	656 nm
Laser class	1
Optical peak power max.	2,4 mW
Adjustment	Touch Display, RS485
Electrical data	
Response time / release time	3,5 ms
Voltage supply range +Vs	15 … 28 VDC
Current consumption max. (no load)	120 mA
Output circuit	Analog and RS 485
Output signal	4 ... 20 mA / 0 ... 10 VDC
Switching output	Push-pull
Output function	Out 1 / Alarm
Output current	< 100 mA

Electrical data	
Baud rate	115200, adjustable
Reverse polarity protection	Yes, Vs to GND
Short circuit protection	Yes
Mechanical data	
Width / diameter	26 mm
Height / length	74 mm
Depth	55 mm
Type	Rectangular, front view
Housing material	Aluminum
Front (optics)	Glass
Connection types	Connector M12 8 pin
Weight	130 g
Ambient conditions	
Ambient light immunity	< 35 kLux
Operating temperature	-10 … +50 °C
Protection class	IP 67
Storage temperature	-25 … +75 °C
Vibration (sinusoidal)	IEC 60068-2-6:2008 1.5 mm p-p at f = 10 - 57 Hz, 10 cycles per axis 10 g at f = 58 - 2000 Hz, 10 cycles per axis

2020-12-16 The product features and technical data specified do not express or imply any warranty. Technical modifications subject to change.

ПРОМЭЛЕКТРОНИКА / sales@prom-elec.com

OXH7-Z0150.HI0720.VI

Height Tool

Article number: 11159406

Technical data

Ambient conditions

Shock (semi-sinusoidal)	IEC 60068-2-27:2009 50 g / 11 ms resp. 100 g / 6 ms, 10 jolts per axis and direction 100 g / 2 ms, 5000 jolts per axis and direction

Remarks

- Conditions for the following characteristics:
- Measuring frequency 2) 3)
- Resolution 1) 2) 4) 5)
- Linearity error 1) 2) 4)
- Temperature drift 1) 2) 4)
- Response time / release time 2) 3)
- 1) Measurement with Baumer standardized measuring equipment and targets depending on measuring range (distance)
- 2) Measurement on 90% remission (white)
- 3) Measurement with reduced Field of View (start of measurement range 140 mm, end of measurement range 150 mm)
- 4) Measurement with measuring type average
- 5) Measurement with filtering

Laser warning

CLASS 1 LASER PRODUCT

IEC 60825-1/2014
Complies with 21 CFR 1040.10 and 1040.11 except for conformance with IEC 60825-1 Ed. 3., as described in Laser Notice No. 56, dated May 8, 2019

Dimension drawing

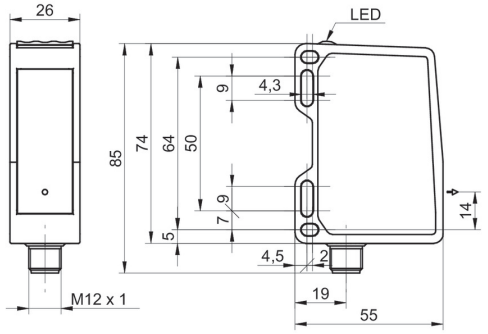

Pin assignment

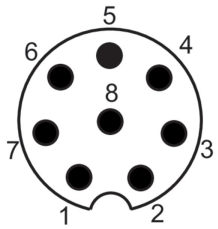

Connection diagram

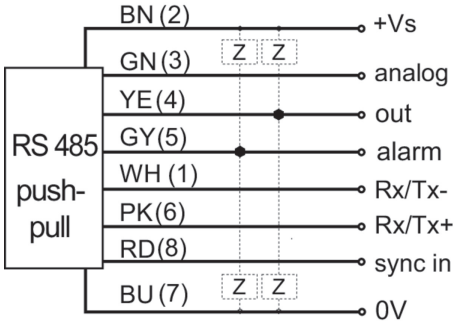

2020-12-16 The product features and technical data specified do not express or imply any warranty. Technical modifications subject to change.