EZ-LIGHT Indicators for 3-Color, 7-Function

more sensors, more solutions

Datasheet

DC-operated LED indicators with solid ON or flashing capability and a Euro-style integral QD[1]. Choose from red, yellow, or green ON, flashing, or rotating (depending on wiring). [2]

Models		Construction	Inputs
	M18GRY2PQ	Nickel-plated brass housing, M18x1 thread; thermoplastic diffuser. Fully encapsulated; IP67.	PNP
	M18GRY2NQ		NPN
	T30GRY2PQ	Thermoplastic polyester housing, thermoplastic diffuser. Fully encapsulated; IP67.	PNP
	T30GRY2NQ		NPN
	K50LGRY2PQ	30 mm threaded polycarbonate base, translucent polycarbonate dome. Fully encapsulated; IP67, IP69K.	PNP
	K50LGRY2NQ		NPN
	K50FLGRY2PQ	Polycarbonate base, translucent polycarbonate dome. Fully encapsulated; IP67, IP69K.	PNP
	K50FLGRY2NQ		NPN
	K80LGRY2PQ [3]	ABS and polycarbonate base, translucent polycarbonate dome. Electronics fully encapsulated; IP67.	PNP
	K80LGRY2NQ		NPN

Other Models: Standard integral QD models only are listed (mating cordset required). To order 2 m (6.5 ft) cable models, omit suffix **Q** from model number (example, M18GRY2P). To order models with 150 mm (6 inch) PVC pigtail with 5-pin Euro QD connector, replace suffix **Q** with **QP** (example, M18GRY2PQP).

Specifications

Supply Voltage and Current

M18 Models: 10 to 30 V dc at 40 mA max.
T30 Models: 10 to 30 V dc at 50 mA max.
K50L, K50FL and K80L Models: 18 to 30 V dc at 50 mA max.

Indicators

Entire translucent diffuser or dome provides indication.
LEDs are independently selected: Green, Red, Yellow, ON steady or flashing.
For other colors/combinations, contact Factory for availability

Input Response Time

Indicator ON: 250 ms (max.)
Indicator OFF: 10 ms (max.)

Indicator Flash Rate

Single Color: 1 second flash rate (500 ms ON)
Three Color: 1.5 second rotation rate (500 ms per color)

Connections

K80L Models: 5-pin Euro-style integral QD (Q) standard. Terminal-wired models available for use with bulk cable; compression fitting optional. Contact Factory for cable information.
Other Models: 5-pin Euro-style integral QD (Q); 6" pigtail QD (QP), (do not use center pin 5); or 5-wire, 2 m (6.5') integral cable

Operating Conditions

Temperature: –40 °C to 50 °C (–40 °F to 122 °F)

Environmental Rating

Rated IEC IP67. K80L has encapsulated electronics only; other models fully encapsulated.
K50L, and K50FL quick-disconnect models meet IP69K per DIN 40050-9
Cabled models also meet IP69K if the cable and cable entrance are protected from high-pressure spray.

---

[1] Pin 5 is not used; connects to 4-wire QD cordset. If a cordset other than those specified in this document is used, use a 5-pin mating cordset.
[2] Contact Factory for other colors/color combinations, including: blue, white, orange.
[3] K80L Models: Standard 5-pin Euro integral QD connector models only are listed (mating cordset required). For terminal-wired model, omit suffix Q (example, K80LGRY2P).

Original Document
121902 Rev. K

22 April 2019

121902

ПРОМЭЛЕКТРОНИКА / sales@prom-elec.com

Dimensions

M18 Models

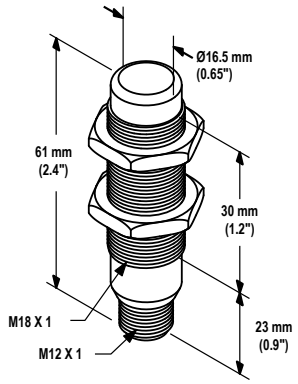

T30 Models

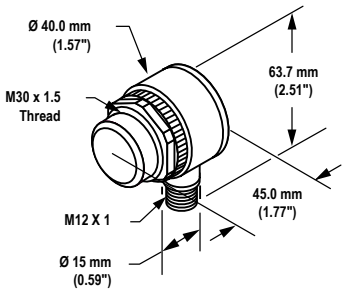

K50L Models

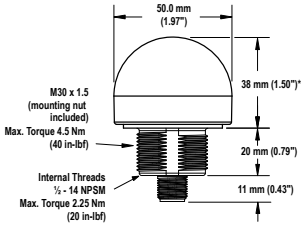

K50FL Models

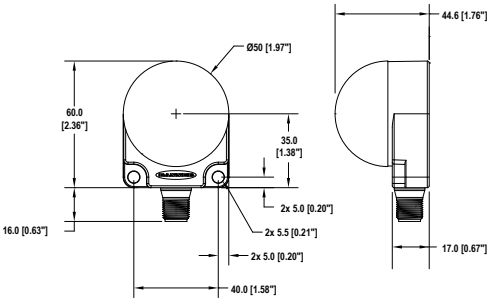

K80L Models

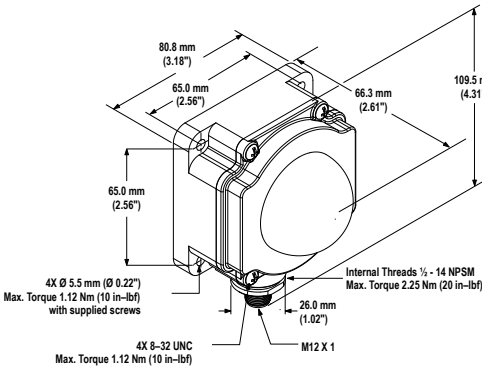

Wiring

Table 1: Select from 7 operating schemes, depending on wiring

LED Function	PNP Models				NPN Models			
	Brown Wire	White Wire	Black Wire	Blue Wire	Blue Wire	White Wire	Black Wire	Brown Wire
Red ON	+V dc			0 V dc	0 V dc			+V dc
Red Flashing	+V dc		+V dc	0 V dc	0 V dc		0 V dc	+V dc
Yellow ON		+V dc		0 V dc		0 V dc		+V dc
Yellow Flashing	+V dc	+V dc		0 V dc	0 V dc	0 V dc		+V dc
Green ON			+V dc	0 V dc			0 V dc	+V dc
Green Flashing		+V dc	+V dc	0 V dc		0 V dc	0 V dc	+V dc
Rotating Red-Green-Yellow	+V dc	+V dc	+V dc	0 V dc	0 V dc	0 V dc	0 V dc	+V dc

Table 2: Only QD wiring is shown; cabled wiring is functionally identical.

PNP Models	NPN Models
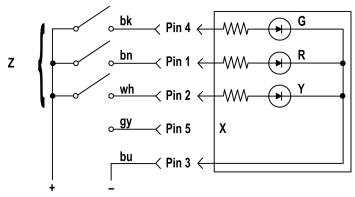	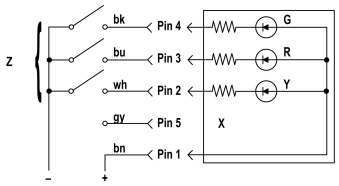
G = Green R = Red Y = Yellow X = Not Used	

Accessories

4-Pin Threaded M12/Euro-Style Cordsets—Single Ended				
Model	**Length**	**Style**	**Dimensions**	**Pinout (Female)**
MQDC-406	1.83 m (6 ft)	Straight	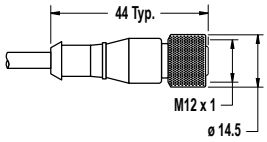	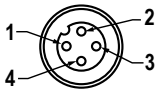 1 = Brown 2 = White 3 = Blue 4 = Black
MQDC-415	4.57 m (15 ft)			
MQDC-430	9.14 m (30 ft)			
MQDC-450	15.2 m (50 ft)			
MQDC-406RA	1.83 m (6 ft)	Right-Angle	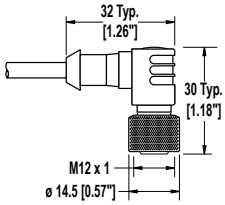	
MQDC-415RA	4.57 m (15 ft)			
MQDC-430RA	9.14 m (30 ft)			
MQDC-450RA	15.2 m (50 ft)			

To order bulk cable for terminal-wired K80L models, contact the factory. If cables other than those listed are used, use a 5-pin mating cable.

Brackets		
SMB18A • Right-angle mounting bracket with a curved slot for versatile orientation • 12-ga. stainless steel • 18 mm sensor mounting hole • Clearance for M4 (#8) hardware **Hole center spacing:** A to B = 24.2 **Hole size:** A = ø 4.6, B = 17.0 × 4.6, C = ø 18.5	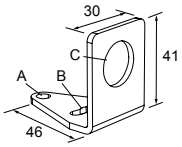	For use with M18 and T18 models or base-mount T30 models. Other available 18 mm dia. brackets: SMB1815SF SMB18Q SMB18SF SMB312PD SMBAMS18RA SMBAMS18P

Brackets		
SMB30A • Right-angle bracket with curved slot for versatile orientation • Clearance for M6 (¼ in) hardware • Mounting hole for 30 mm sensor • 12-ga. stainless steel **Hole center spacing:** A to B=40 **Hole size:** A=ø 6.3, B= 27.1 x 6.3, C=ø 30.5	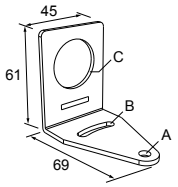	For use with T30 models or base-mount K50L models. Other available 30 mm diameter brackets are: SMBAMS30RA SMBAMS30P SMB30SC SMB30SC SMB30MM SMB3018SC
SMBDX80DIN • Black reinforced thermoplastic • Bracket for mounting on a 35 mm DIN rail	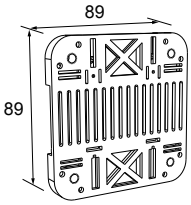	K50FL models include a 48 mm (1.9 inch) circular velcro mounting kit for easy mounting with no additional hardware

Banner Engineering Corp Limited Warranty

Banner Engineering Corp. warrants its products to be free from defects in material and workmanship for one year following the date of shipment. Banner Engineering Corp. will repair or replace, free of charge, any product of its manufacture which, at the time it is returned to the factory, is found to have been defective during the warranty period. This warranty does not cover damage or liability for misuse, abuse, or the improper application or installation of the Banner product.

THIS LIMITED WARRANTY IS EXCLUSIVE AND IN LIEU OF ALL OTHER WARRANTIES WHETHER EXPRESS OR IMPLIED (INCLUDING, WITHOUT LIMITATION, ANY WARRANTY OF MERCHANTABILITY OR FITNESS FOR A PARTICULAR PURPOSE), AND WHETHER ARISING UNDER COURSE OF PERFORMANCE, COURSE OF DEALING OR TRADE USAGE.

This Warranty is exclusive and limited to repair or, at the discretion of Banner Engineering Corp., replacement. IN NO EVENT SHALL BANNER ENGINEERING CORP. BE LIABLE TO BUYER OR ANY OTHER PERSON OR ENTITY FOR ANY EXTRA COSTS, EXPENSES, LOSSES, LOSS OF PROFITS, OR ANY INCIDENTAL, CONSEQUENTIAL OR SPECIAL DAMAGES RESULTING FROM ANY PRODUCT DEFECT OR FROM THE USE OR INABILITY TO USE THE PRODUCT, WHETHER ARISING IN CONTRACT OR WARRANTY, STATUTE, TORT, STRICT LIABILITY, NEGLIGENCE, OR OTHERWISE.

Banner Engineering Corp. reserves the right to change, modify or improve the design of the product without assuming any obligations or liabilities relating to any product previously manufactured by Banner Engineering Corp. Any misuse, abuse, or improper application or installation of this product or use of the product for personal protection applications when the product is identified as not intended for such purposes will void the product warranty. Any modifications to this product without prior express approval by Banner Engineering Corp will void the product warranties. All specifications published in this document are subject to change; Banner reserves the right to modify product specifications or update documentation at any time. Specifications and product information in English supersede that which is provided in any other language. For the most recent version of any documentation, refer to: *www.bannerengineering.com*.

For patent information, see *www.bannerengineering.com/patents*.

more sensors, more solutions

© Banner Engineering Corp. All rights reserved