IABU Headquarters
Delta Electronics, Inc.
Taoyuan3
No.18, Xinglong Rd., Taoyuan City,
Taoyuan County 330, Taiwan, R.O.C.
TEL: 886-3-362-6301 / FAX: 886-3-371-6301

Asia
Delta Electronics (Jiangsu) Ltd.
Wujiang Plant3
1688 Jiangxing East Road,
Wujiang Economic Development Zone
Wujiang City, Jiang Su Province,
People's Republic of China (Post code: 215200)
TEL: 86-512-6340-3008 / FAX: 86-769-6340-7290

Delta Greentech (China) Co., Ltd.
238 Min-Xia Road, Cao-Lu Industry Zone,Pudong, Shanghai,
People's Republic of China
Post code : 201209
TEL: 021-58635678 / FAX: 021-58630003

Delta Electronics (Japan), Inc.
Tokyo Office
2-1-14 Minato-ku Shibadaimon,
Tokyo 105-0012, Japan
TEL: 81-3-5733-1111 / FAX: 81-3-5733-1211

Delta Electronics (Korea), Inc.
234-9, Duck Soo Building 7F, Nonhyun-Dong,
Kangnam-Gu, Seoul, Korea 135-010
TEL: 82-2-515-5305 / FAX: 82-2-515-5302

Delta Electronics Int'l (S) Pte Ltd
4 Kaki Bukit Ave 1, #05-05, Singapore 417939
TEL: 65-6747-5155 / FAX: 65-6744-9228

Delta Electronics (India) Pvt. Ltd.
Plot No. 43, Sector – 35, HSIIDC,
Gurgaon122001, Haryana, India
TEL: 1-919-767-3800 / FAX: 91-124-403-6045

Americas
Delta Products Corporation (USA)
Raleigh Office
P.O. Box 12173,5101 Davis Drive,
Research Triangle Park, NC 27709, U.S.A.
TEL: 1-919-767-3813 / FAX: 1-919-767-3969

Delta Greentech (Brasil) S.A
Sao Paulo Office
Rua Itapeva, 26-30 Andar Edificio Itapeva One-Bela Vista
01332-000-Sao Paulo-SP-Brazil
TEL: +55 11 3568-3850/FAX: +55 11 3568-3865

Europe
Deltronics (The Netherlands) B.V.
Eindhoven Office
De Witbogt 15, 5652 AG Eindhoven, The Netherlands
TEL: 31-40-2592850 / FAX: 31-40-2592851

Version: V2.1
DELTA_IA-ASDA_B2_UM_EN_20141218

*We reserve the right to change the information in this manual without prior notice.

Delta Standard AC Servo Drive for General Purpose Applications ASDA-B2 Series User Manual

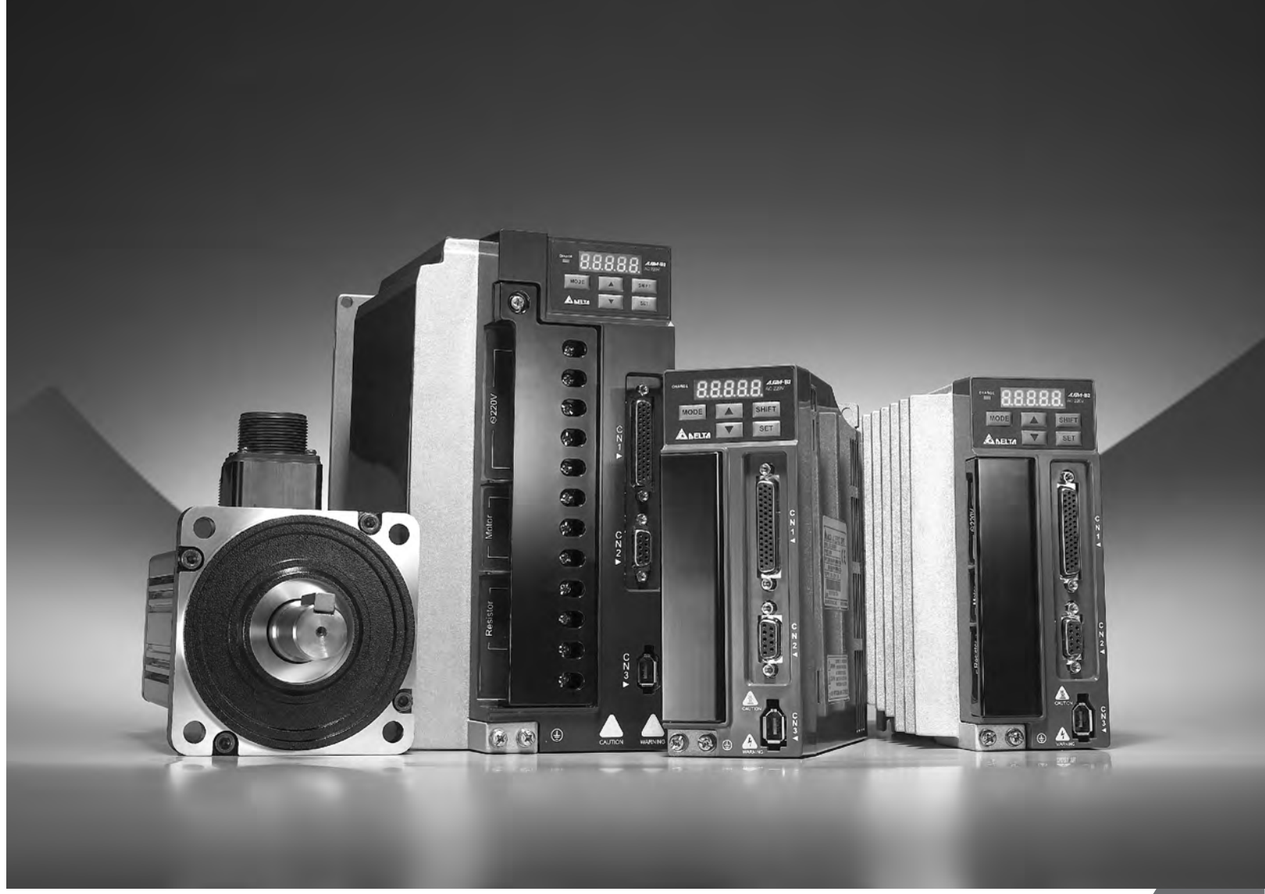

Delta Standard AC Servo Drive for General Purpose Applications ASDA-B2 Series User Manual

ПРОМ ЭЛЕКТРОНИКА
www.importsnab24.ru

ПРОМЭЛЕКТРОНИКА / sales@prom-elec.com

Preface

Thank you for purchasing ASDA-B2. This user manual provides the related information of ECMA series servo motors. This manual includes:

- Installation and inspection of servo drive and servo motor
- The configuration of servo drive
- Procedures of trial run
- Control functions and adjustment methods of servo drives
- Parameter
- Communication protocol
- Inspection and maintenance
- Troubleshooting

This manual addresses personnel with the following qualifications:

- Servo system designers
- Installation or wiring personnel
- Trial and tuning personnel
- Maintenance and inspection personnel

Before using the product, please read through this manual carefully in order to ensure the correct use of the product. In addition, please place this manual safely for quick reference whenever is needed. Please follow the rules below if you have not finished reading this manual yet.

- No water, corrosive gas and inflammable gas are allowed in installation environment.
- Three-phase power is prohibited to connect to U, V and W connector when wiring. It is possible to damage the servo drive.
- Ensure that the motor and drive are correctly connected to a ground. The grounding method must comply with the electrical standard of the country (Please refer to NFPA 70: National Electrical Code, 2005 Ed.).
- Do not disconnect the servo drive, motor or change the wiring when connecting to the power.
- Be ensured that the emergency stop can be activated anytime before connecting to the power and operation.

- Do not touch the heat sink to avoid scald before connecting to the power and operation.

If you have any enquiry, please contact the distributors or DELTA customer service center.

Safety Precautions

ASDA-B2 series is the high resolution and open type servo drive. It should be installed in a shielded control box during operation. This servo drive uses precise feedback control and the digital signal processor with high-speed calculation function to control the current output which generated by IGBT so as to operate three-phase permanent magnet synchronous motors (PMSM) and to achieve precise positioning.

ASDA-B2 is applicable on industrial application and is suggested to be installed in the panel-board of the user manual. (Servo drives, wire rod and motors all should be installed in the environment which complies with the minimum requirement of UL Level 1 or NEMA 250 Type 1.)

Pay special attention to the following safety precautions anytime during inspection, installation, wiring, operation and examination.

The symbol of **danger**, **warning** and **stop** represent:

DANGER	It indicates the potential hazards. It is possible to cause severe injury or fatal harm if not follow the instructions.
WARNING	It indicates the potential hazards. It is possible to cause minor injury or lead to serious damage of the product or even malfunction if not follow the instructions.
STOP	It indicates the absolute prohibited activity. It is possible to damage the product or cannot be used due to malfunction if not follow the instructions.

Inspection

DANGER

- Please follow the instruction when using servo drive and servo motor, or it is possible to cause fire or malfunction.

Installation

DANGER

- It is prohibited to expose the product with the environment which containing water, corrosive gas, inflammable gas, etc. Or it is possible to cause electric shock or fire.

Wiring

DANGER

- Please connect the ground terminal to class-3 ground system (under 100 Ω); poor grounding may result in electric shock or fire.
- Do not connect the three-phase source to the motor output terminal U, V and W. Or it is possible to cause personnel injury or fire.
- Please tighten the screws of the power and motor output terminal. Or it is possible to cause fire.

Operation

WARNING

- Before the operation, please change the parameter setting value according to the needs. If it is not adjusted to the correct setting value, it is possible to lead to malfunction of the machine or the operation might out of control.
- Before the machine starts to operate, please be ensured the emergency stop can be activated anytime.

STOP

- During the operation, it is prohibited to touch any rotating motor parts. Or it is possible to cause personnel injury.

DANGER

- In order to prevent any accident, please separate the couplings and belts of the machine and isolate them. Then conduct the initial trial run.
- If users fail to operate the machine properly after the servo motor connects to the equipment, it would cause the damage of the equipment and lead to the personnel injury.
- In order to prevent the danger, it is strongly recommended to check if the motor can operate normally without load first. Then, operate the motor with load.
- Do not touch the heat sink of the servo drive. Or it is possible to cause scald due to the high temperature.

Maintenance and Inspection

STOP

- It is prohibited to touch the internal parts of the servo drive and servo motor. Or it is possible to cause electric shock.
- It is prohibited to disassemble the panel of the servo drive when turning on the power. Or it is possible to cause electric shock.
- Do not touch the ground terminal within 10 minutes after turning off the power. Or the residual voltage may cause electric shock.
- Do not disassemble the motor. Or it is possible to cause electric shock or personnel injury.
- Do not change the wiring when the power is on. Or it is possible to cause electric shock or personnel injury.
- Only the qualified electrical and electronics professionals can install, wire and maintain the servo drive and servo motor.

Main Circuit Wiring

WARNING

- Do not put the power cable and the encoder cable in the same channel and bond them together. Please separate the power cable and the encoder cable for at least 30 centimeters (= 11.8 inches) when wiring.
- Please use stranded wires and multi-core shielded-pair wires for the encoder cables and encoder feedback cables. The maximum length of command input cable is 3 meters (= 9.84 feet) and the maximum length of feedback cable is 20 meters (= 65.62 feet).
- The high voltage might remain in the servo motor even when the power is off. Do not touch the power terminal temporally (at least 10 minutes). Please conduct the inspection not until the indicator light, **CHARGE** is off.

- Do not turn the power on and off too often. If continuous power on and off is needed, please be ensured the interval is one minute at most.

Terminal Wiring of the Main Circuit

WARNING

- When wiring, please disassemble the terminal socket from the servo drive.
- One terminal of the terminal socket for one electric wire only.
- When inserting the electric wires, do not connect the conductor to the adjacent wire.
- Before connecting to the power, please inspect and be ensured the wiring is correct.

NOTE

If there is any difference of each version, please refer to DELTA′ s website (http://www.delta.com.tw/industrialautomation/) for the latest information.

(This page is intentionally left blank.)

Table of Contents

Chapter 1 Installation and Model Explanation 1-1

1.1 Inspection 1-1

1.2 Product Model 1-2

1.2.1 Nameplate Information 1-2

1.2.2 Model Explanation 1-3

1.3 Servo Drive and Corresponding Servo Motor 1-5

1.4 Servo Drive Features 1-7

1.5 Control Modes of Servo Drive 1-8

Chapter 2 Installation 2-1

2.1 Notes 2-1

2.2 Ambient Conditions of Storage 2-1

2.3 Ambient Conditions of Installation 2-2

2.4 Installation Direction and Space 2-3

2.5 Specification of Circuit Breaker and Fuse 2-5

2.6 EMI Filter Selection 2-6

2.7 Selection of Regenerative Resistor 2-8

Chapter 3 Wiring 3-1

3.1 Connections 3-1

3.1.1 Connecting to Peripheral Devices 3-1

3.1.2 Servo Drive Connectors and Terminals 3-2

3.1.3 Wiring Method 3-4

3.1.4 Specification of Motor Power Cable 3-6

3.1.5 Specification of Encoder Connector 3-8

3.1.6 Selection of Wiring Rod 3-11

3.2 Basic Wiring 3-13

3.2.1 200 W (included) and Models below 3-13

3.2.2 400 W ~ 750 W Models 3-14

3.2.3 1 kW ~ 3 kW Models 3-15

3.3 I / O Signal (CN1) Connection 3-16

3.3.1 I/O Signal (CN1) Connector Terminal Layout 3-16

3.3.2 Signals Explanation of Connector CN1 3-18

3.3.3 Wiring Diagrams (CN1) 3-26

3.3.4 DI and DO Signal Specified by Users 3-33

3.4 CN2 Connector 3-34

3.5 Wiring of CN3 Connector 3-36

3.6 Analog Monitor Output Connector - CN5 3-37

3.7 Standard Connection Example 3-38

3.7.1 Position (PT) Control Mode 3-38

3.7.2 Speed Control Mode 3-39

3.7.3 Torque Control Mode 3-40

Chapter 4 Panel Display and Operation 4-1

4.1 Panel Description 4-1

4.2 Parameter Setting Procedure 4-2

4.3 Status Display 4-3

4.3.1 Save Setting Display 4-3

4.3.2 Decimal Point 4-3

4.3.3 Alarm Message 4-3

4.3.4 Positive and Negative Sign Setting 4-4

4.3.5 Monitor Display 4-4

4.4 General Function 4-7

4.4.1 Operation of Fault Code Display 4-7

4.4.2 JOG Mode 4-8

4.4.3 Force DO Output 4-9

4.4.4 Digital Input Diagnosis Operation 4-10

4.4.5 Digital Output Diagnosis Operation 4-11

Chapter 5 Trial Operation and Tuning 5-1

5.1 Inspection without Load 5-1

5.2 Applying Power to the Servo Drive 5-3

5.3 JOG Trial Run without Load 5-7

5.4 Trial Run without Load (Speed Mode) 5-8

5.5 Tuning Procedure 5-10

5.5.1 Flowchart of Tuning Procedure 5-11

5.5.2 Inertia Estimation Flowchart (with Mechanism) 5-12

5.5.3 Flowchart of Auto Tuning 5-13

5.5.4 Flowchart of Semi-Auto Tuning 5-14

5.5.5 Limit of Inertia Ratio 5-15

5.5.6 Mechanical Resonance Suppression Method 5-17

5.5.7 Tuning Modes and Parameters 5-18

5.5.8 Tuning in Manual Mode 5-19

Chapter 6 Control Modes of Operation 6-1

6.1 Selection of Operation Mode 6-1

6.2 Position Mode 6-3

6.2.1 Position Command in PT Mode 6-3

6.2.2 Control Structure of Position Mode 6-6

6.2.3 Electronic Gear Ratio 6-7

6.2.4 Low-pass Filter 6-9

6.2.5 Gain Adjustment of Position Loop 6-9

6.3 Speed Mode 6-12

6.3.1 Selection of Speed Mode 6-12

6.3.2 Control Structure of Speed Mode 6-13

6.3.3 Smoothing Speed Command 6-14

6.3.4 The Scaling of Analog Command 6-18

6.3.5 Timing Diagram in Speed Mode 6-19

6.3.6 Gain Adjustment of Speed Loop 6-19

6.3.7 Resonance Suppression 6-26

6.4 Torque Mode 6-34

6.4.1 Selection of Torque Command 6-34

6.4.2 Control Structure of Torque Mode 6-35

6.4.3 Smooth Torque Mode 6-36

6.4.4 The Scaling of Analog Command 6-36

6.4.5 Timing Diagram of Torque Mode 6-38

6.5 Dual Modes 6-39

6.5.1 Speed / Position Dual Mode 6-39

6.5.2 Speed / Torque Dual Mode 6-40

6.5.3 Torque / Position Dual Mode 6-40

6.6 Others 6-41

6.6.1 The Use of Speed Limit 6-41

6.6.2 The Use of Torque Limit 6-41

6.6.3 Analog Monitor 6-42

6.6.4 The Use of Brake 6-47

Chapter 7 Parameters 7-1

7.1 Parameter Definition 7-1

7.2 Lists of Parameters 7-2

7.3 Parameter Description 7-12

P0-xx Monitor Parameters 7-12

P1-xx Basic Parameters 7-22

P2-xx Extension Parameters 7-49

P3-xx Communication Parameters 7-77

P4-xx Diagnosis Parameters 7-82

Table 7.1 Function Description of Digital Input (DI) 7-92

Table 7.2 Function Description of Digital Input Output (DO) 7-98

Chapter 8 Communications 8-1

8.1 RS485 & RS-232 Communication Hardware Interface 8-1

8.2 RS485 & RS-232Communication Parameter Settings 8-3

8.3 MODBUS Communication Protocol 8-6

8.4 Write-in and Read-out Communication Parameters 8-16

Chapter 9 Troubleshooting 9-1

9.1 Alarm of Servo Drive 9-1

9.2 Causes and Corrective Actions 9-4

9.3 Corrective Actions after the Alarm Occurs 9-15

Chapter 10 Specifications 10-1

10.1 Specifications of Servo Drives (ASDA-B2 Series) 10-1

10.2 Specifications of Servo Motors (ECMA Series) 10-4

10.3 Torque Features (T-N Curves) 10-12

10.4 Overload Features 10-14

10.5 Dimensions of Servo Drives 10-16

10.6 Dimensions of Servo Motors 10-20

Appendix A Accessories A-1

Appendix B Maintenance and Inspection B-1

About this Manual…

User Information

Be sure to store this manual in a safe place.

Due to constantly growing product range, technical improvement, alteration or changed texts, figures and diagrams, we reserve the right to make information changes within this manual without prior notice.

Coping or reproducing any part of this manual, without written consent of Delta Electronics Inc. is prohibited.

Technical Support and Service

Welcome to contact us or visit our web site (http://www.delta.com.tw/ia/) if you need any technical support, service and information, or, if you have any question in using the product. We are looking forward to serve you needs and willing to offer our best support and service to you. Reach us by the following ways.

ASIA

DELTA ELECTRONICS, INC.

Taoyuan Plant 3

No.18, Xinglong Rd.,

Taoyuan City, Taoyuan County 33068, TAIWAN, R.O.C.

TEL: 886-3-362-6301

FAX: 886-3-362-7267

JAPAN

DELTA ELECTRONICS (JAPAN), INC.

Tokyo Office

DELTA SHIBADAIMON BUILDING

2-1-14 SHIBADAIMON, MINATO-KU,

TOKYO, 105-0012, JAPAN

TEL: 81-3-5733-1111

FAX: 81-3-5733-1211

NORTH/SOUTH AMERICA

DELTA PRODUCTS CORPORATION (USA)

Raleigh Office

P.O. BOX 12173

5101 DAVIS DRIVE,

RESEARCH TRIANGLE PARK, NC 27709, U.S.A.

TEL: 1-919-767-3813

FAX: 1-919-767-3969

EUROPE

DELTRONICS (THE NETHERLANDS) B.V.

Eindhoven Office

DE WITBOGT 15, 5652 AG EINDHOVEN,

THE NETHERLANDS

TEL: 31-40-259-2850

FAX: 31-40-259-2851

(This page is intentionally left blank.)

Chapter 1 Installation and Model Explanation

1.1 Inspection

In order to prevent the negligence during purchasing and delivery, please inspect the following items carefully.

Item	Content
Please check if the product is what you have purchased	Check the part number of the motor and the servo drive on the nameplate. Refer to the section 1.2 for the model explanation.
Check if the motor shaft can rotate smoothly	Rotate the motor shaft by hand. If it can be rotated smoothly, it means the motor shaft is normal. However, it cannot be rotated by hand if the motor has an electromagnetic brake.
Check if there is any damage shown on its appearance	Visually check if there is any damage or scrape of the appearance.
Check if there is any loose screw	If the screws are un-tightened or fall off.

If any of the above situations happens, please contact the distributors to solve the problems.

A complete and workable servo set should include:

(1) A Servo drive and a servo motor

(2) A UVW motor power cable, red (U), white (V) and black (W) wires can connect to the socket attached by the servo drive. And a green ground wire which should be locked to the ground terminal of the servo drive. (selective purchase)

(3) An encoder cable which connects to the socket of the encoder. One side of it connects to CN2 servo drive and another side is the plug. (selective purchase)

(4) 44-PIN connector which is used in CN1 (CviLux analog product) (selective purchase)

(5) 9-PIN connector which is used in CN2 (CviLux analog product) (selective purchase)

(6) 6-PIN connector which is used in CN3 (CviLux analog product) (selective purchase)

1.2 Product Model

1.2.1 Nameplate Information

ASDA-B2 Series Servo Drive

■ Nameplate Information

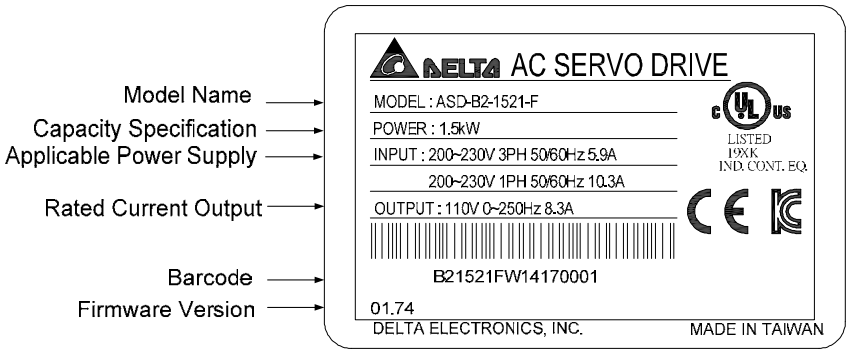

■ Serial Number

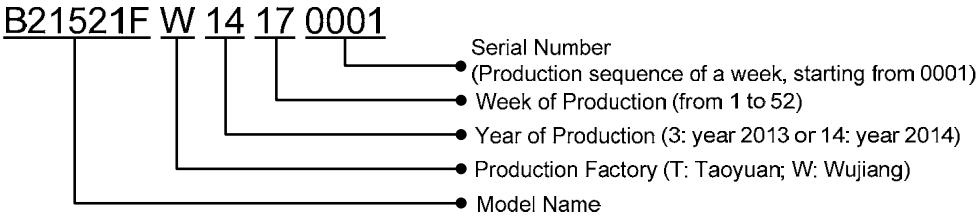

ECMA Series Servo Motor

■ Nameplate Information

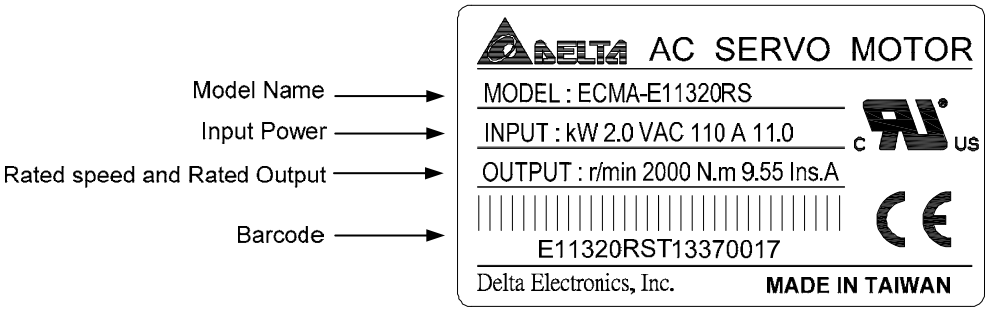

■ Serial Number

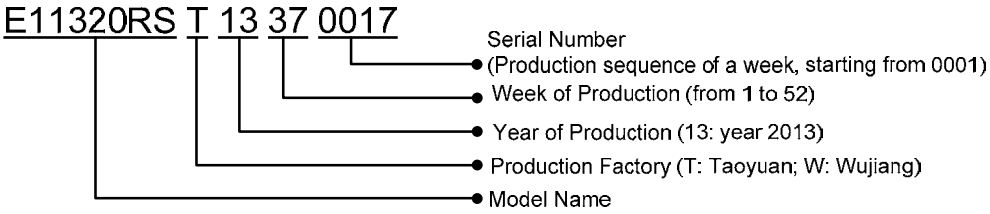

1.2.2 Model Explanation

ASDA-B2 Series Servo Drive

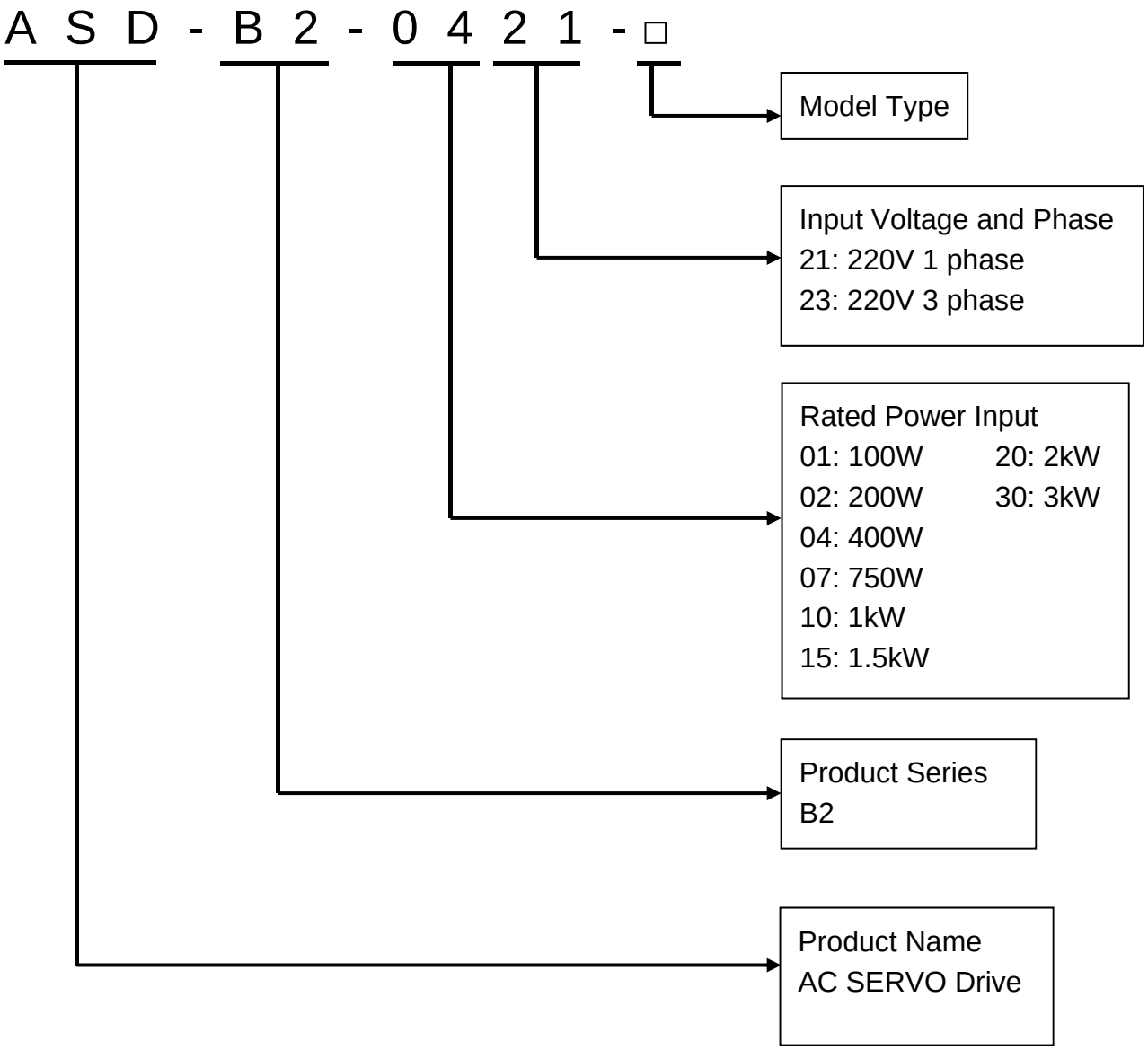

Model Type

Type	Full-Closed Control	EtherCAT	CANopen	DMCNET	E-CAM	Extension Port for Digital Input
B	×	×	×	×	×	×

ECMA Series Servo Motor

E C M A - C 1 0 6 0 2 E S

Standard Shaft Diameter: S
Specific Shaft Diameter: 3=42mm, 7=14mm

Type of Shaft Diameter and Oil Seal	w/o Brake w/o Oil Seal	with Brake w/o Oil Seal	w/o Brake with Oil Seal	With Brake With Oil Seal
Round Shaft (with fixed screw holes)	A	B	C	D
Keyway	E	F	G	H
Keyway (with fixed screw holes)	P	Q	R	S

Rated Power Output
01:100W 05:500W 10:1.0kW
02:200W 06:600W 15:1.5kW
03:300W 07:700W 20:2.0kW
04:400W 09:900W 30:3.0kW

Motor Frame Size
04:40mm 09:86mm 18:180mm
06:60mm 10:100mm
08:80mm 13:130mm

Name of the Series
Rated Voltage and Rated Speed
C = 220V/3,000 rpm; **E** = 220V/2,000 rpm;
F = 220V/1,500 rpm; **G** = 220V/1,000 rpm;
Encoder Type
1: Incremental, 20-bit
2: Incremental, 17-bit
3: 2500ppr
M: Magnetic encoder, 13-bit

Servo Type
A: AC Servo

Product Name
ECM: Electronic Commutation Motor

1.3 Servo Drive and Corresponding Servo Motor

Motor							Servo Drive		
Motor series		Power	Output (W)	Model Number	Rated Current (Arms)	Max. Instantaneous current (A)	Model Number	Continuous Output Current (Arms)	Max. Instantaneous output current (A)
Low Inertia	ECMA-C 3000 r/min	Single-/Three-phase	100	ECMA-C△0401□S	0.90	2.70	ASD-B2-0121-□	0.90	2.70
			200	ECMA-C△0602□S	1.55	4.65	ASD-B2-0221-□	1.55	4.65
			400	ECMA-C△0604□S	2.60	7.80	ASD-B2-0421-□	2.60	7.80
			400	ECMA-C△0804□7	2.60	7.80			
			750	ECMA-C△0807□S	5.10	15.30	ASD-B2-0721-□	5.10	15.30
			750	ECMA-C△0907□S	3.66	11.00			
			1000	ECMA-C△0910□S	4.25	12.37	ASD-B2-1021-□	7.30	21.90
			1000	ECMA-C△1010□S	7.30	21.90			
			2000	ECMA-C△1020□S	12.05	36.15	ASD-B2-2023-□	13.40	40.20
			3000	ECMA-C△1330□4	17.2	47.5	ASD-B2-3023-□	19.40	58.20
Medium Inertia	ECMA-E 2000 r/min	Single-/Three-phase	500	ECMA-E△1305□S	2.90	8.70	ASD-B2-0421-□	2.60	7.80
			1000	ECMA-E△1310□S	5.60	16.80	ASD-B2-1021-□	7.30	21.90
			1500	ECMA-E△1315□S	8.30	24.90	ASD-B2-1521-□	8.30	24.90
			2000	ECMA-E△1320□S	11.01	33.03	ASD-B2-2023-□	13.40	40.20
			2000	ECMA-E△1820□S	11.22	33.66			
			3000	ECMA-E△1830□S	16.10	48.30	ASD-B2-3023-□	19.40	58.20
			3500	ECMA-E△1835□S	19.20	57.60			
Medium-high inertia	ECMA-F 1500 r/min	Single-/Three-phase	850	ECMA-F△1308□S	7.10	19.40	ASD-B2-1021-□	7.30	21.90
			1300	ECMA-F△1313□S	12.60	38.60	ASD-B2-2023-□	13.40	40.20
			1800	ECMA-F△1318□S	13.00	36.00			
			3000	ECMA-F△1830□S	19.40	58.20	ASD-B2-3023-□	19.40	58.20
High Inertia	ECMA-C/G 3000 r/min	Single-/Three-phase	400	ECMA-C△0604□H	2.60	7.80	ASD-B2-0421-□	2.60	7.80
			750	ECMA-C△0807□H	5.10	15.30	ASD-B2-0721-□	5.10	15.30
			300	ECMA-G△1303□S	2.50	7.50	ASD-B2-0421-□	2.60	7.80
			600	ECMA-G△1306□S	4.80	14.40	ASD-B2-0721-□	5.10	15.30
			900	ECMA-G△1309□S	7.50	22.50	ASD-B2-1021-□	7.30	21.90

NOTE

1) The boxes (□) at the ends of the servo drive model names are the mode code of ASDA-B2. Please refer to the ordering information of the actual purchased product.
2) The boxes (△) in the model names are for encoder resolution types. △=1: Incremental type, 20-bit; △=2: Incremental type, 17-bit; △=3: 2500 ppr; △=A: Absolute type). The listed motor model name is for information searching, please contact to your local distributors for actual purchased product.
3) The boxes (□) in the model names represents brake or keyway / oil seal.
4) The above table shows the specification of servo drive which has triple rated current. If you need 6 times rated current for your servo drive, please contact with local distributors. For detailed specification of the servo motor and servo drive, please refer to Chapter 10.

1.4 Servo Drive Features

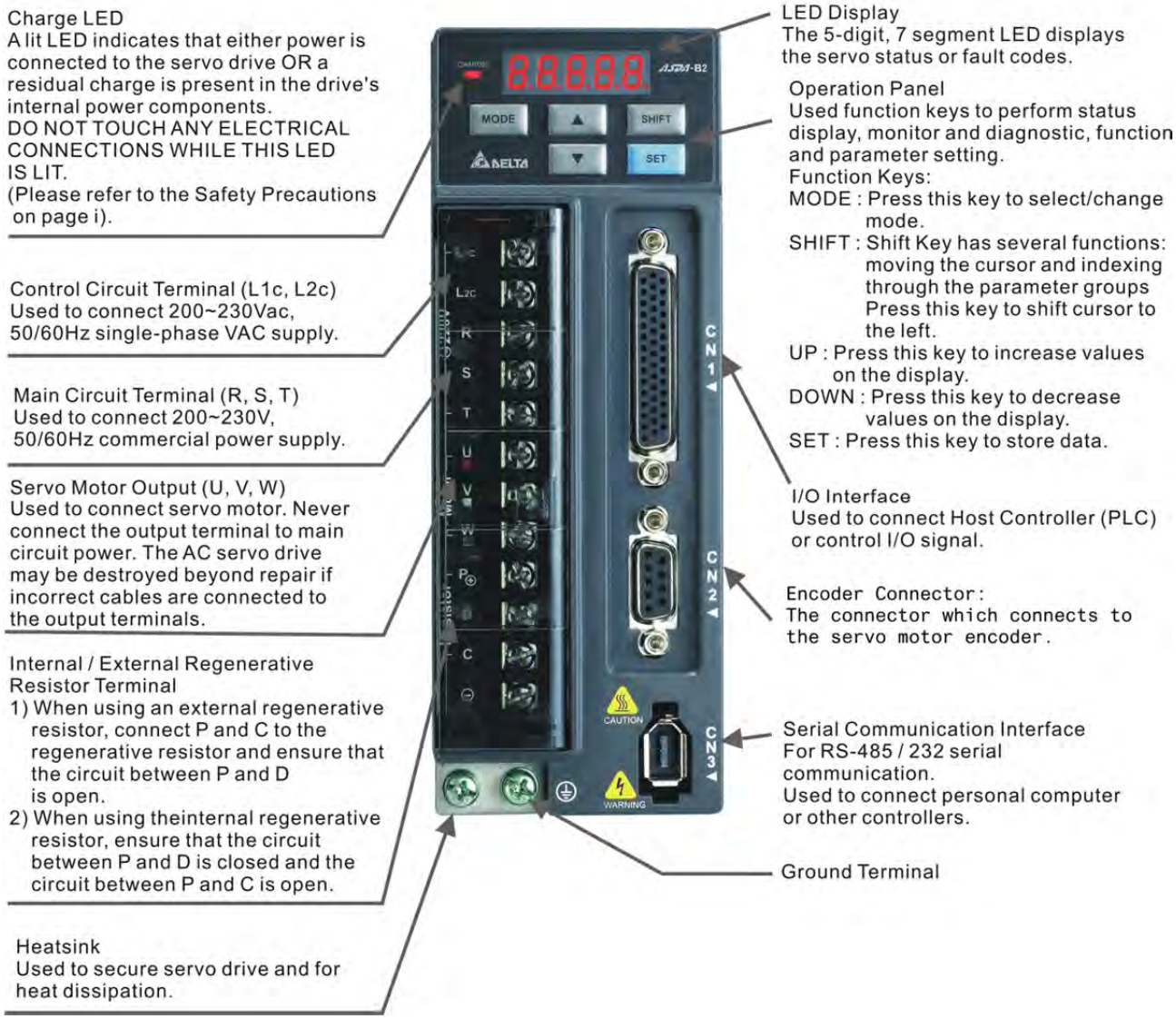

1.5 Control Modes of Servo Drive

Various operation modes are provided. Please refer to the following table:

Mode		Code	Description
Single Mode	Position Mode (Terminal Input)	P	Servo drive receives the position command and commands the servo motor to the target position. The position command is sent from CN1 and its signal type is pulse.
	Speed Mode	S	Servo drive receives the speed command and commands the servo motor to the target speed. Speed command is from the internal register (there are 3 in total) or external analog voltage (-10V ~ +10V). The command can be selected by DI.
	Speed Mode (No analog input)	Sz	Servo drive receives the speed command and commands the servo motor to the target speed. Speed command is from internal register only (there are 3 in total) and the command can be selected by DI. The external analog voltage command is not available in Sz mode.
	Torque Mode	T	Servo drive receives the torque command and commands the servo motor to the target torque. Torque command is from the internal register (there are 3 in total) or external analog voltage (-10V ~ +10V). The command can be selected by DI.
	Torque Mode (No analog input)	Tz	Servo drive receives the torque command and commands the servo motor to the target torque. Torque command is from internal register only (there are 3 in total) and the command can be selected by DI. The external analog voltage command is not available in Tz mode.
Dual Mode		S-P	Either S or P control mode can be selected via the Digital Input (DI) (Please refer to Chapter 7, table 7-1, Function Description of Digital Input (0x18)).
		T-P	Either T or P control mode can be selected via the Digital Input (DI) (Please refer to Chapter 7, table 7-1, Function Description of Digital Input (0x20)).
		S-T	Either S or T control mode can be selected via the Digital Input (DI) (Please refer to Chapter 7, table 7-1, Function Description of Digital Input (0x19)).

Users can use P1-01 to select the control mode. When the setting of new control mode is complete, please re-power on the servo drive to take the new mode into effect.

Chapter 2 Installation

2.1 Notes

Please pay close attention to the followings:

- Do not strain the cables between the servo drive and servo motor.
- Make sure to each screw is tightened when fixing the servo drive.
- The motor shaft and the ball screw should be parallel.
- If the connection between the servo drive and the servo motor is over 20 meters, please thicken the connecting wire, UVW as well as the encoder cable.
- Tighten the fixed four screws of the motor.

2.2 Ambient Conditions of Storage

Before the installation, this product has to be kept in shipping carton. In order to retain the warranty coverage and for the maintenance, please follow the instructions below when storage, if the product is not in use temporally:

- Store the product in a dry and dust-free location.
- Store the product within an ambient temperature range of -20 ℃ to +65 ℃ (-4°F to 149°F).
- Store the product within a relative humidity range of 0% to 90% and a non-condensing environment.
- Avoid storing the product in the environment of corrosive gas and liquid.
- It is better to store the product in shipping carton and put it on the shelf or working platform.

2.3 Ambient Conditions of Installation

Operating Temperature

ASDA-B2 Series Servo Drive : 0°C to 55°C (32°F to 131°F)

ECMA Series Servo Motor : 0°C to 40°C (32°F to 104°F)

The ambient temperature of servo drive should be under 45°C (113°F) for long-term reliability.

If the temperature of servo drive is greater than 45°C, please place the product in a well-ventilated environment so as to ensure its reliability performance. If the product is installed in an electric box, make sure the size of the electric box and its ventilation condition will not overheat and endanger the internal electronic device. Also, pay attention to the vibration of the machine. Check if the vibration will influence the electronic device of the electric box. Failure to observe the following precautions may void the warranty. The ambient conditions should also include:

- Location has no over-heat device, no water drop, vapor, dust and oily dust, no corrosive and inflammable gas and liquid, no airborne dust and metal particles, with solid foundation and no vibration and no interference of electromagnetic noise.
- Do not mount the servo drive or motor in a location where temperatures and humidity will exceed specification.
- Do not mount the servo drive or motor in a location where vibration and shock will exceed specification.
- Make sure the storage environment of servo drive and servo motor complies with the specification which mentioned in Chapter 10.

2.4 Installation Direction and Space

Notes:

- Incorrect installation may result in a drive malfunction or premature failure of the drive and or motor.
- The ASDA-B2 servo drive should be mounted perpendicular to the wall or in the control panel. In order to ensure the drive is well ventilated, ensure that the all ventilation holes are not obstructed and sufficient free space is given to the servo drive. Do not install the drive in a horizontal position or malfunction and damage will occur.
- Do not parallel connect the servo drive, or it might burn out the soft-start resistance or the commutator and danger will occur.

Correct Incorrect

Drive Mounting

The ASDA-B2 servo drives must be back mounted vertically on a dry and solid surface such as a NEMA enclosure. A minimum spacing of two inches must be maintained above and below the drive for ventilation and heat dissipation. Additional space may be necessary for wiring and cable connections. Also, as the drive conducts heat away via the mounting, the mounting plane or surface should not conduct heat into the drive from external sources

Motor Mounting

The ECMA servo motors should be mounted firmly to a dry and solid mounting surface to ensure maximum heat transfer for maximum power output and to provide a good ground.

For the dimensions and weights specifications of servo drive or motor, please refer to Chapter 10 - Specifications.

Scheme of Installation

In order to have smaller wind resistance of the fan and increase the ventilation, please follow the suggested clearance value when installing one or more than one servo drives. (Refer to the following diagrams)

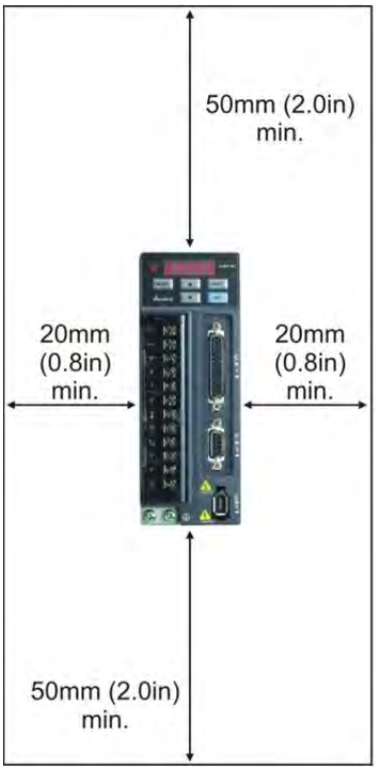

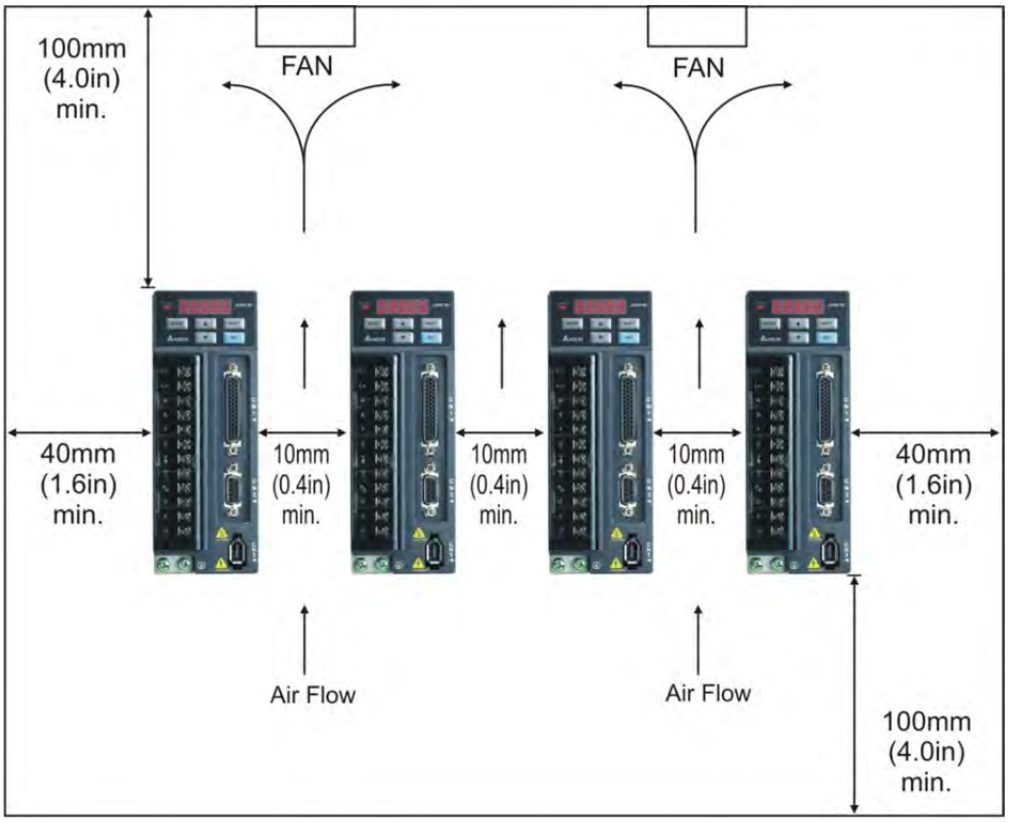

NOTE The above diagrams are not in equal proportion. Please refer to the annotation.

2.5 Specification of Circuit Breaker and Fuse

Caution: Please use the fuse and circuit breaker that is recognized by UL/CSA.

Servo Drive Model	Circuit Breaker	Fuse (Class T)
Operation Mode	General	General
ASD-B2-0121-B	5A	5A
ASD-B2-0221-B	5A	6A
ASD-B2-0421-B	10A	10A
ASD-B2-0721-B	10A	20A
ASD-B2-1021-B	15A	25A
ASD-B2-1521-B	20A	40A
ASD-B2-2023-B	30A	50A
ASD-B2-3023-B	30A	70A

NOTE

If the servo drive equips with earth leakage circuit breaker for avoiding electric leakage, please choose the current sensitivity which is over 200mA and can continue up to 0.1 seconds.

2.6 EMI Filter Selection

Item	Power	Servo Drive Model	Recommended EMI Filter		FootPrint
			1PH	3PH	
1	100W	ASD-B2-0121-B	RF007S21AA	RF022M43AA	N
2	200W	ASD-B2-0221-B	RF007S21AA	RF022M43AA	N
3	400W	ASD-B2-0421-B	RF007S21AA	RF022M43AA	N
4	750W	ASD-B2-0721-B	RF007S21AA	RF022M43AA	N
5	1000W	ASD-B2-1021-B	RF015B21AA	RF075M43BA	N
6	1500W	ASD-B2-1521-B	RF015B21AA	RF075M43BA	N
7	2000W	ASD-B2-2023-B	-	RF037B43BA	N
8	3000W	ASD-B2-3023-B	-	RF037B43BA	N

EMI Filter Installation

All electronic equipment (including servo drive) generates high or low frequency noise during operation and interfere the peripheral equipments via conduction or radiation. With EMI Filter and the correct installation, much interference can be eliminated. It is suggested to use Delta′ s EMI Filter to suppress the interference better.

When installing servo drive and EMI Filter, please follow the instructions of the user manual and make sure it meets the following specification.

1. EN61000-6-4 (2001)
2. EN61800-3 (2004) PDS of category C2
3. EN55011+A2 (2007) Class A Group 1

General Precaution

In order to ensure the best performance of EMI Filter, apart from the instructions of servo drive installation and wiring, please follow the precautions mention below:

1. The servo drive and EMI Filter should be installed on the same metal plate.
2. When installing servo drive and EMI Filter, the servo drive should be installed above the EMI Filter.
3. The wiring should be as short as possible.
4. The metal plate should be well grounded.
5. The metal cover of the servo drive and EMI Filter or grounding should be firmly fixed on the metal plate. Also, the contact area should be as large as possible.

Motor Cable Selection and Installation Precautions

The selection of motor cables and installation affect the performance of EMI Filter. Please follow the precautions mention below.

1. Use the cable that has braid shielding (The effect of double shielding is better)

2. The shield on both sides of the motor cable should be grounded in the shortest distance and the largest contact area.

3. The protective paint of the U-shape saddle and metal plate should be removed in order to ensure the good contact. Please see disgram 1.

4. It should have correct connection between the braid shielding of the motor cable and the metal plate. The braid shielding on both sides of the motor cable should be fixed by the U-shape saddle and metal plate. Please see diagram 2 for the correct connection.

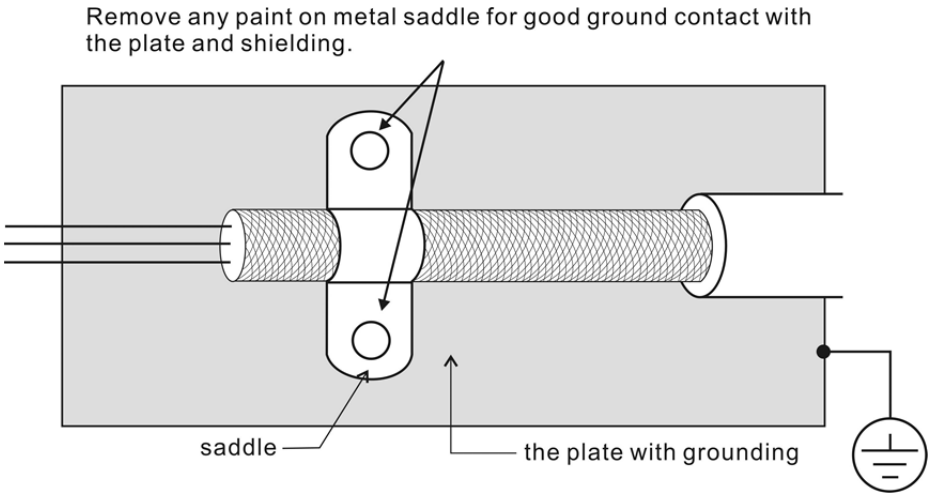

Figure 1

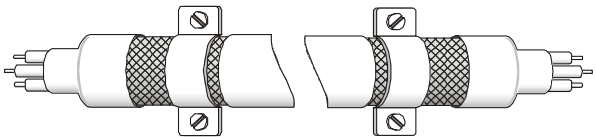

Saddle on both ends

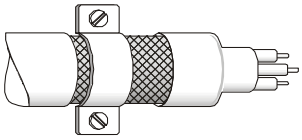

Saddle on one end

Figure 2

2.7 Selection of Regenerative Resistor

When the direction of pull-out torque is different from the rotation, it means the electricity is sent back to the servo drive from the load-end. It becomes the capacitance of DC Bus and increases the voltage. When the voltage increases to a specific value, the come-back eletricity can only be consumed by regenerative resistor. There is a built-in regenerative resistor in the servo drive. Users can also use the external regenerative resistor if needed.

Specification of built-in regenerative resistor provided by ASDA-B2

Servo Drive (kW)	Specification of built-in regenerative resistor		*1The capacity of built-in regenerative resistor (Watt)	Min. Allowable Resistance (Ohm)
	Resistance (P1-52) (Ohm)	Capacity (P1-53) (Watt)		
0.1	-	-	-	60
0.2	-	-	-	60
0.4	100	60	30	60
0.75	100	60	30	60
1.0	40	60	30	30
1.5	40	60	30	30
2.0	20	100	50	15
3.0	20	100	50	15

*1 Regenerative Power Calculation: The amount of regenerative power (average value) that can be processed is rated at 50% of the capacity of the servo drive's built-in regenerative resistor. The regenerative power calculation method of external regenerative resistor is the same.

When the regenerative resistor exceeds the capacity of built-in regenerative resistor, the external regenerative resistor should be applied. Please pay special attention to the followings when using the regenerative resistor.

1. Please correctly set up the resistance (P1-52) and capacity (P1-53) of regenerative resistor. Or it might influence the performance of this function.
2. If users desire to use the external regenerative resistor, please make sure the applied value is the same as the built-in regenerative resistor. If users desire to connect it in parallel to increase the power of regenerative resistor, please make sure the capacitance meets the requirements.
3. In natural environment, if the capacity of regenerative resistor (the average value) is within the rated capacity, the temperature of the capacitance will increase to 120℃ or even higher (under the condition of regenerative energy keeps existing). For safety concerns, please apply the method of forced cooling in order to reduce the temperature of regenerative resistor. Or, it is suggested to use the regenerative

resistor which is equipped with thermal switches. Please contact the distributors for load characteristics of the regenerative resistor.

When using the external regenerative resistor, the resistor should connect to P, C terminal and the contact of P, D terminal should be opened. It is recommended to choose the above mentioned capacitance. For easy calculation of regenerative resistor capacity, except the energy consumed by IGBT, two ways are provided to select the capacity of external regenerative resistor according to the selected linear motor or rotary motor.

(1) Regenerative Power Selection

(a) When the external load on torque does not exist

If the motor operates back and forth, the energy generated by the brake will go into the capacitance of DC bus. When the voltage of the capacitance exceeds a specific value, the redundant energy will be consumed by regenerative resistor. Two ways of selecting regenerative resistor are provided here. The table below provides the energy calculation method. Users can refer to it and calculate the selected regenerative resistor.

Servo Drive (kW)		Servo Motor	Rotor Inertia J (× 10^{-4}kg.m^2)	Regenerative power from empty load 3000r/min to stop Eo (joule)	Max. regenerative power of capacitance Ec(joule)
Low Inertia	0.1	ECMA-C△0401□ □	0.037	0.18	3
	0.2	ECMA-C△0602□ □	0.177	0.87	4
	0.4	ECMA-C△0604□ □	0.277	1.37	8
		ECMA-C△0804□ □	0.68	3.36	8
	0.75	ECMA-C△0807□ □	1.13	5.59	14
	1.0	ECMA-C△1010□ □	2.65	13.1	18
	1.0	ECMC-C△0910□ □	2.62	12.96	18
	2.0	ECMC-C△1020□ □	4.45	22.0	21
	3.0	ECMA-C△1330□ □	12.7	62.80	28

Servo Drive (kW)		Servo Motor	Rotor Inertia J (× 10^{-4}kg.m^2)	Regenerative power from empty load 3000r/min to stop Eo (joule)	Max. regenerative power of capacitance Ec(joule)
Medium Inertia	0.4	ECMA-E△1305□ □	8.17	40.40	8
	1.0	ECMA-E△1310□ □	8.41	41.59	18
	1.5	ECMA-E△1315□ □	11.18	55.28	18
	2.0	ECMA-E△1320□ □ ECMA-E△1820□ □	14.59 34.68	72.15 171.50	21
	3.0	ECMA-E△1830□ □	54.95	217.73	28
		ECMA-F△1830□ □	54.95	217.73	28
		ECMA-E△1835□□	54.95	217.73	28
Medium-high Inertia	1.0	ECMA-F△1308□□	13.6	67.25	18
	2.0	ECMA-F△1313□□	20.0	98.90	21
	2.0	ECMA-F△1318□□	24.9	123.13	21
	3.0	ECMA-F△1830□□	54.95	217.73	28
High Inertia	0.4	ECMA-G△1303□ □	8.17	40.40	8
	0.75	ECMA-G△1306□ □	8.41	41.59	14
	1.0	ECMA-G△1309□ □	11.18	55.29	18

Eo = J x wr^2/182 (joule), Wr : r/min

Assume that the load inertia is N times to the motor inertia and the motor decelerates from 3000r/min to 0, its regenerative energy is (N+1) x Eo. The consumed regenerative resistor is (N+1) × Eo - Ec joule. If the cycle of back and forth operation is T sec, then the power of regenerative resistor it needs is 2× ((N+1) x Eo - Ec) / T.

Followings are the calculation procedure:

Step	Procedure	Calculation and Setting Method
1	Set the capacity of regenerative resistor to the maximum	Set P1-53 to the maximum value
2	Set T cycle of back and forth operation	Enter by the user
3	Set the rotational speed wr	Enter by the user or read via P0-02
4	Set the load/motor inertia ratio N	Enter by the user or read via P0-02
5	Calculate the maximum regenerative energy Eo	Eo= J*wr^2/182

6	Set the absorbable regenerative energy Ec	Refer to the above table
7	Calculate the needful capacitance of regenerative resistor	2 x ((N+1) xEo – Ec) / T

Take 400W as the example, the cycle of back and forth operation is T = 0.4sec, the maximum speed is 3000r/min and the load inertia is 7 times to the motor inertia. Then, the needful power of regenerative resistor is 2 × ((7+1) × 1.68 – 8) / 0.4 = 27.2 W. If it is smaller than the built-in capacity of regenerative resistor, the built-in 60W regenerative resistor will do. Generally speaking, when the need of the external load inertia is not much, the built-in regenerative is enough. The diagram below describes the actual operation. The smaller power of the regenerative resistor it is, the more energy it accumulates and the higher temperature it will be. When the temperature is higher than a specific value, ALE05 occurs.

(b) If the external load torque exists, the motor is in reverse rotation.

Usually, the motor is in forward rotation, which means the torque output direction of the motor is the same as the rotation direction. However, in some applications, the direction of torque output is different from the rotation. In this situation, the motor is in reverse rotation. The external energy goes into the servo drive through the motor. The diagram below is one example. When the external force direction is the same as the moving direction, the servo system has to use the force of the opposite direction to keep the speed and stability. Huge amount of energy will return to the servo drive at the moment. When DC-BUS is full and unable to store the regenerative energy, the energy will be leaded to regenerative resistor and consumed.

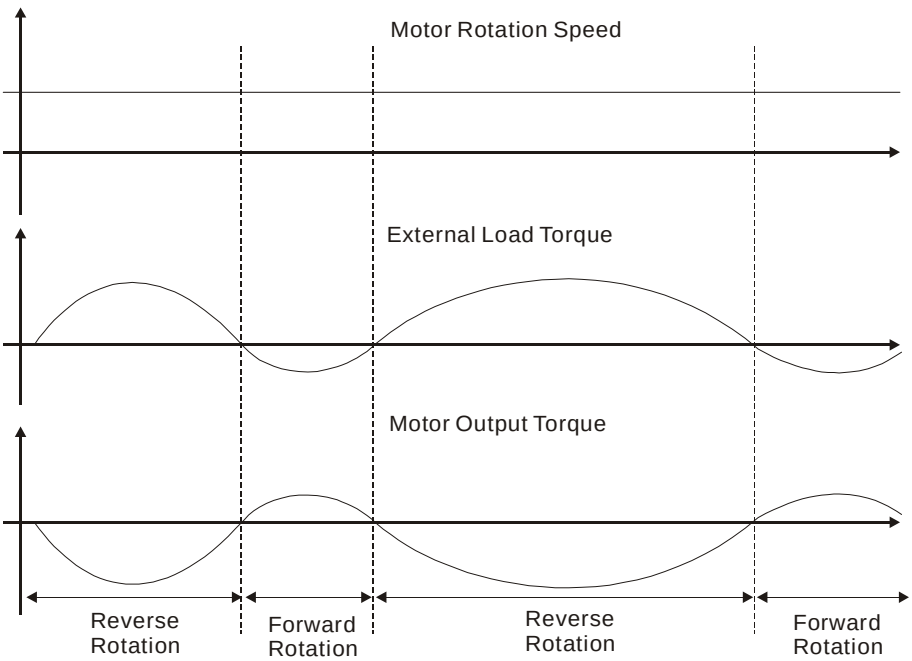

Negative torque: TL × Wr TL: external load torque

For safety reasons, please calculate it by considering the safest situation.

For example, when the external load torque is the +70% rated torque and the rotation reaches 3000 r/min, then take 400 W (the rated torque is 1.27 Nt-m) as the example, the user has to connect the regenerative resistor of 40Ω, which is 2 ×(0.7×1.27) ×(3000 ×2 ×π / 60) = 560W.

(2) Simple Selection

Choose the appropriate regenerative resistor according to the allowable frequency and empty load frequency in actual operation. The so-called empty allowable frequency is the frequency of continuous operation when the servo motor runs from 0r/min to the rated speed and then decelerates from the rated speed to 0r/min within the shortest time. The following table lists the allowable frequency when the servo drive runs without load (times/min).

Allowable Frequencies for Servo Motor Running Without Load (times/min) When Using Built-in Regenerative Resistor								
Motor Capacity	600W	750W	900W	1.0kW	1.5kW	2.0kW	2.0kW	3.0kW
ECMA Series	06	07	09	10	15	20	20	30
ECMA□□C	-	312	-	137	-	83 (F100)		-
ECMA□□E	-	-	-	42	32	24 (F130)	10 (F180)	11
ECMA□□G	42	-	31	-	-	-	-	-

When the servo motor runs with load, the allowable frequency will be different according to different load inertia or speed. The following is the calculation method.

m represents load / motor inertia ratio.

$$\text{Allowable frequency} = \frac{\text{Allowable frequency when servo motor run without load}}{m+1} \times \left(\frac{\text{Rated speed}}{\text{Operating speed}}\right)^2 \frac{\text{times}}{\text{min.}}$$

The comparison table of external regenerative resistor is provided below. Please choose the appropriate regenerative resistor according to the allowable frequency.

The table below describes the suggested allowable frequency (times/min) of regenerative resistor when the servo drive runs without load.

Allowable Frequencies for Servo Motor Running Without Load (times/min) When Using External Regenerative Resistor							
Motor Capacity	ECMA□ □ C						
	100W	200W	400W (F60)	400W (F80)	750W	1.0kW	2.0kW
Regenerative Resistor	01	02	04	04	07	10	20
200W 80Ω	32793	6855	4380	1784	1074	458	273
400W 40Ω	-	-	-	-	-	916	545
1kW 30Ω	-	-	-	-	-	-	1363

Allowable Frequencies for Servo Motor Running Without Load (times/min) When Using External Regenerative Resistor						
Motor Capacity / Regenerative Resistor	ECMA□□E					
	0.5kW	1kW	1.5kW	2.0kW	2.0kW	3.0kW
	05	1.0	15	20	20	30
200W 80Ω	149	144	109	83	35	22
400W 40Ω	-	289	217	166	70	44
1kW 30Ω	-	-	-	416	175	110

Allowable Frequencies for Servo Motor Running Without Load (times/min) When Using External Regenerative Resistor			
Motor Capacity / Regenerative Resistor	ECMA□ □ G		
	0.3kW	0.6kW	0.9kW
	03	06	09
200W 80Ω	149	144	109
400W 40Ω	-	-	217

If watt is not enough when using regenerative resistor, connecting the same regenerative resistor in parallel can increase the power.

Dimensions of Regenerative Resistor

Delta Part Number: BR400W040 (400 W 40 Ω)

L1	L2	H	D	W	MAX. WEIGHT(g)
265	250	30	5.3	60	930

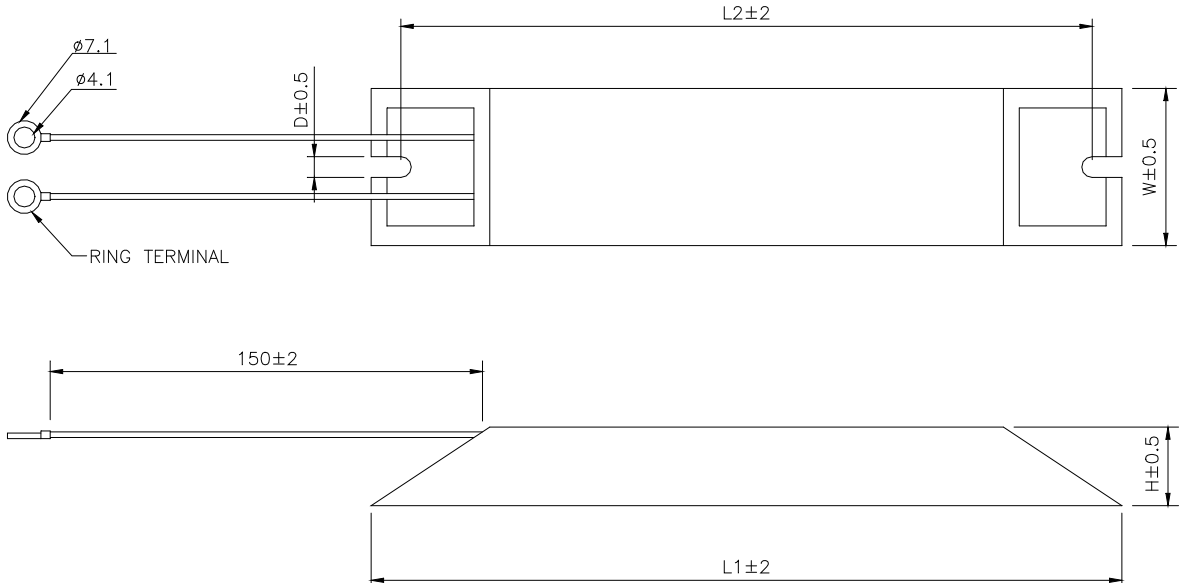

Delta Part Number: BR1K0W020 (1 kW 20 Ω)

L1	L2	H	D	W	MAX. WEIGHT(g)
400	385	50	5.3	100	2800

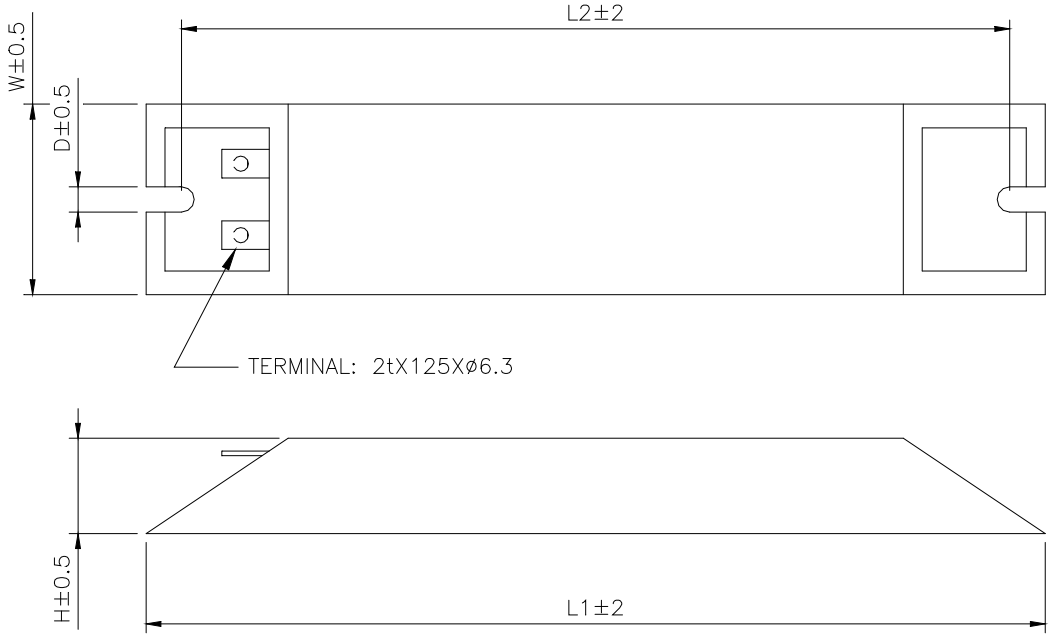

NOTE

1) Regarding the selection of regenerative resistor, please refer to the table of regenerative resistor specifications described in Appendix A.

Chapter 3 Wiring

This chapter provides information on wiring ASDA-B2 series products, the descriptions of I/O signals and gives typical examples of wiring diagrams.

3.1 Connections

3.1.1 Connecting to Peripheral Devices

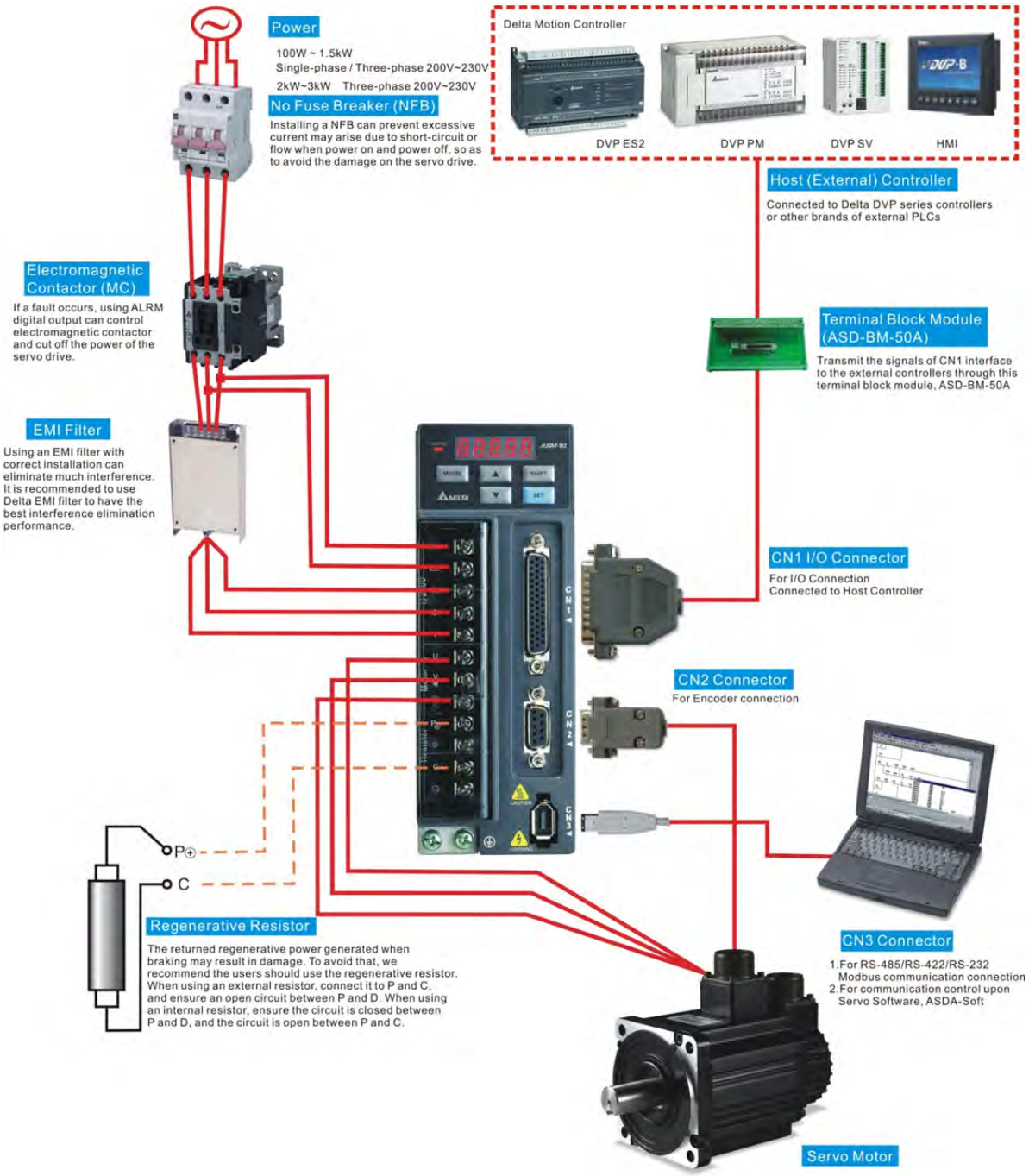

NOTE

Installation notes:

1. Check if the power and wiring among R, S, T and L1c, L2c are correct.
2. Please check if the output terminal U, V, W of the servo motor is correctly wired. The incorrect wiring may disable the operation of the motor or cause malfunction.
3. When applying to the external regenerative resistor, the contact between P⊕ and D should be opened and the external regenerative resistor should connect to terminal P⊕ and C. When applying to the internal regenerative resistor, the contact between P⊕ and D should be closed and the contact between P⊕ and C should be opened.
4. When an alarm occurs or the system is in emergency stop status, use ALARM or WARN to output and disconnect the power of magnetic contactor in order to disconnect the power of servo drive.

3.1.2 Servo Drive Connectors and Terminals

<table>
<tr><th>Terminal Signal</th><th>Name</th><th colspan="3">Description</th></tr>
<tr><td>L1c, L2c</td><td>Control circuit terminal</td><td colspan="3">Used to connect single-phase AC control circuit power. (Control circuit uses the same voltage as the main circuit.)</td></tr>
<tr><td>R, S, T</td><td>Main circuit terminal</td><td colspan="3">Used to connect three-phase AC main circuit power depending on connecting servo drive model.</td></tr>
<tr><td rowspan="5">U, V, W
FG (⏚)</td><td rowspan="5">Servo motor output</td><td colspan="3">Used to connect servo motor</td></tr>
<tr><td>Terminal Symbol</td><td>Wire Color</td><td>Description</td></tr>
<tr><td>U</td><td>Red</td><td rowspan="3">Connecting to three-phase motor main circuit cable.</td></tr>
<tr><td>V</td><td>White</td></tr>
<tr><td>W</td><td>Black</td></tr>
<tr><td>FG(⏚)</td><td>Green</td><td>Connecting to ground terminal (⏚) of the servo drive.</td></tr>
<tr><td rowspan="2">P⊕, D, C, ⊖</td><td rowspan="2">Regenerative resistor terminal or braking unit</td><td>Internal resistor</td><td colspan="2">Ensure the circuit is closed between P⊕ and D, and the circuit is open between P⊕ and C.</td></tr>
<tr><td>External resistor</td><td colspan="2">Connect regenerative resistor to P⊕ and C, and ensure an open circuit between P⊕ and D.</td></tr>
</table>

Terminal Signal	Name	Description	
		External braking unit	Connect braking unit to P⊕ and ⊖, and ensure an open circuit between P⊕ and D, and P⊕ and C. (N terminal is built in L1c, L2c, ⊖, and R, S, T.) P⊕ : Connecting to (+) terminal of V_BUS voltage. ⊖ : Connecting to (-) terminal of V_BUS voltage.
⏚ **two places**	Ground terminal	Used to connect grounding wire of power supply and servo motor.	
CN1	I/O connector	Used to connect external controllers. Please refer to section 3.3 for details.	
CN2	Encoder connector	Used to connect encoder of servo motor. Please refer to section 3.4 for details.	
CN3	Communication connector	Used to connect RS485 or RS-232. Please refer to section 3.5 for details.	
CN4	Reserved connector	Reserved	
CN5	Analog voltage output terminal	Used to monitor the operation status. The drive provides two channels, MON1 and MON2 to output the analog voltage data. Output voltage is reference to the power ground (GND).	

Pay special attention to the followings when wiring:

1. When the power is cutoff, do not touch R, S, T and U, V, W since the capacitance inside the servo drive still contains huge amount of electric charge. Wait until the charging light is off.
2. Separate R, S, T and U, V, W from the other wires. The interval should be at least 30 cm (11.8 inches).
3. If the wire of encoder CN2 connecter is not long enough, please use shielded twisted-pair cable which cannot exceed 20 meters (65.62 inches). If it exceeds 20 meters, please choose the bigger wire diameter of signal cable to ensure it will not cause signal fading.
4. When selecting the wire rod, please refer to Section 3.1.6.

3.1.3 Wiring Method

The wiring method is divided into single-phase and three-phase. Single-phase is for 1.5 kW and the model below 1.5 kW. In the diagram below, Power On is contact **a**, Power Off and ALRM_RY are contact **b**. MC is the coil of magnetic contactor and self-remaining power and is the contact of main power circuit.

■ Wiring Method of Single-phase Power Supply (suitable for 1.5 kW and models below 1.5 kW)

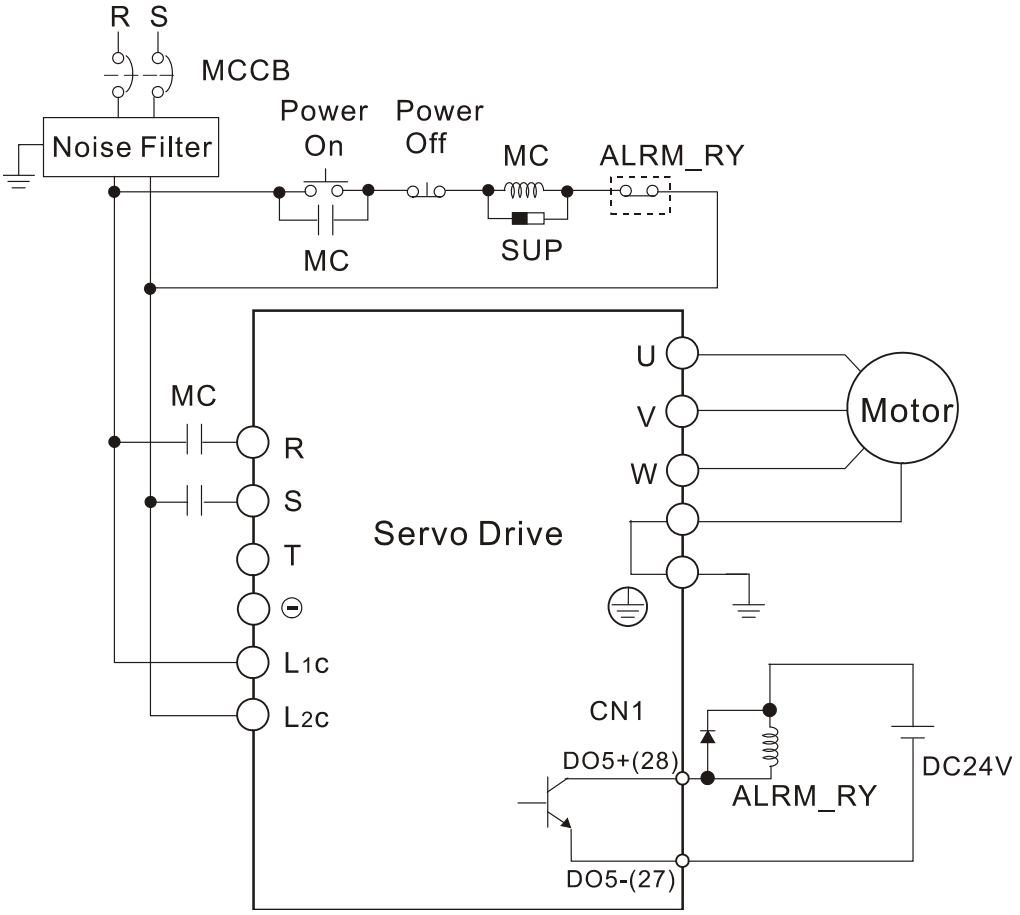

■ Wiring Method of Three-phase Power Supply (suitable for all series)

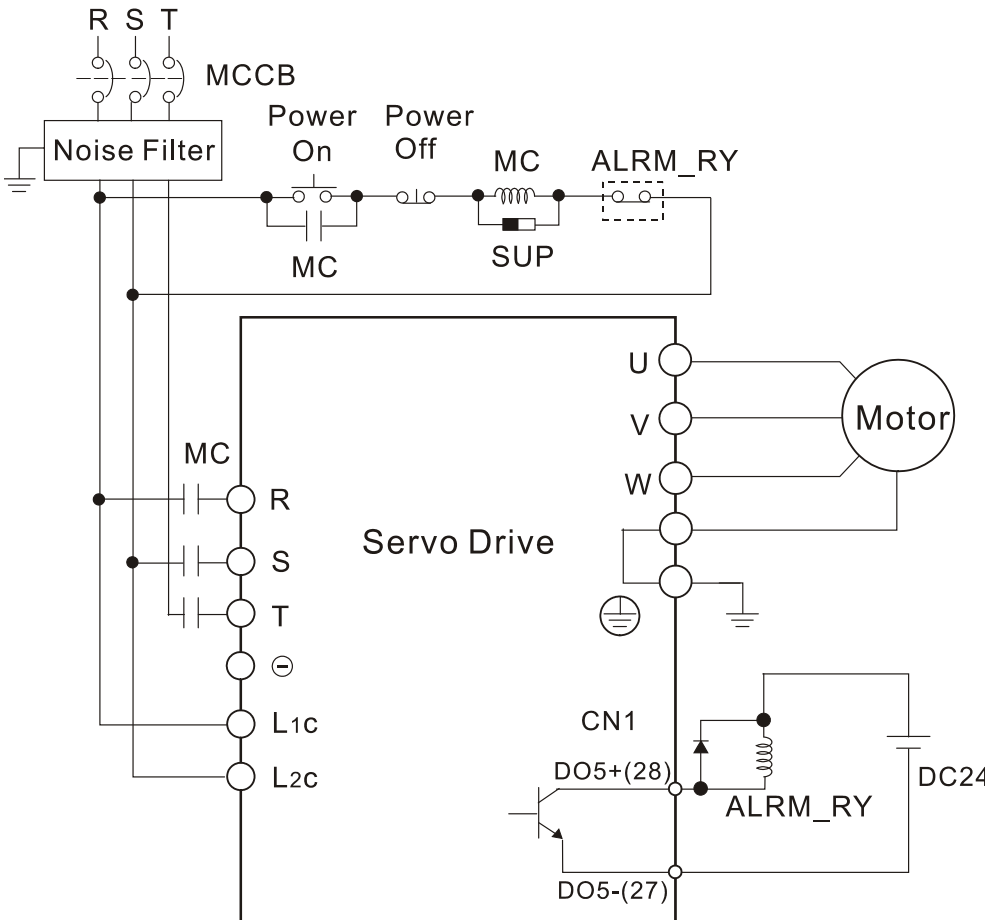

3.1.4 Specification of Motor Power Cable

Motor Model	U, V, W / Connector of Brake	Terminal Identification
ECMA-C△0401□S (100W) ECMA-C△0602□S (200W) ECMA-C△0604□S (400W) ECMA-C△0604□H (400W) ECMA-CM0604PS (400W) ECMA-C△0804□7 (400W) ECMA-C△0807□S (750W) ECMA-C△0807□H (750W) ECMA-CM0807PS (750W) ECMA-C△0907□S (750W) ECMA-C△0910□S (1000W)	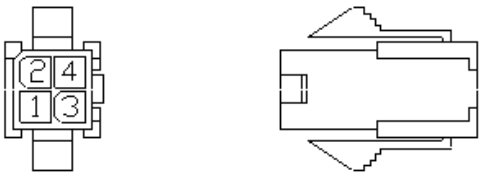 HOUSING: JOWLE (C4201H00-2*2PA)	A
ECMA-C△0602□S (200W) ECMA-C△0604□S (400W) ECMA-CM0604PS (400W) ECMA-C△0804□7 (400W) ECMA-C△0807□S (750W) ECMA-C△0907□S (750W) ECMA-C△0910□S (1000W)	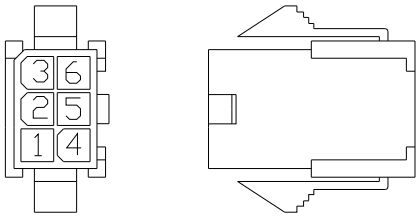 HOUSING: JOWLE (C4201H00-2*3PA)	B
ECMA-G△1303□S (300W) ECMA-E△1305□S (500W) ECMA-G△1306□S (600W) ECMA-F△1308□S (850W) ECMA-G△1309□S (900W) ECMA-C△1010□S (1000W) ECMA-E△1310□S (1000W) ECMA-F△1313□S (1300W) ECMA-E△1315□S (1500W) ECMA-F△1318□S (1800W) ECMA-C△1020□S (2000W) ECMA-E△1320□S (2000W) ECMA-C△1330□4 (3000W)	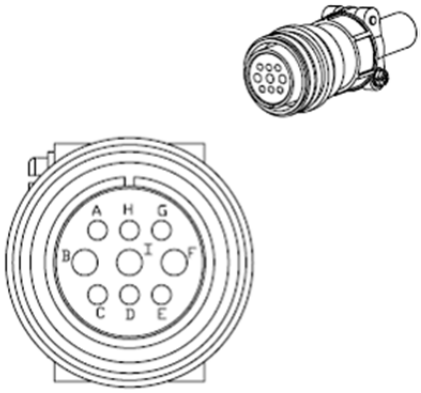 3106A-20-18S	C

Motor Model	U, V, W / Connector of Brake	Terminal Identification
ECMA-E△1820□S (2000W) ECMA-E△1830□S (3000W) ECMA-F△1830□S (3000W) ECMA-E△1835□S (3500W)	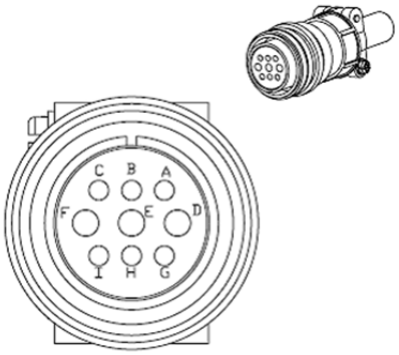 3106A-24-11S	D

Terminal Identification	U (Red)	V (White)	W (Black)	CASE GROUND (Green)	BRAKE1 (Blue)	BRAKE2 (Brown)
A	1	2	3	4	-	-
B	1	2	4	5	3	6
C	F	I	B	E	G	H
D	D	E	F	G	A	B

When selecting the wire rod, please choose 600V PVC cable and the length should not longer than 30m. If the length exceeds 30m, please take the received voltage into consideration when selecting the wire size. Please refer to Section 3.1.6 for wire rod selection.

NOTE

1) The coil of brake has no polarity. The names of terminal identification are BRAKE1 and BRAKE2.
2) The power supply for brake is DC24V. Never use it for VDD, the +24V source voltage.
3) Box, (□) in servo motor model represents brake or keyway / oil seal.
4) Box, (△) in servo motor model represents encoder type. △=1: incremental, 20-bit; △=2: incremental, 17-bit; △ = 3: 33-bit; △=A: absolute.

3.1.5 Specification of Encoder Cable Connector

Encoder Connection (Diagram 1)

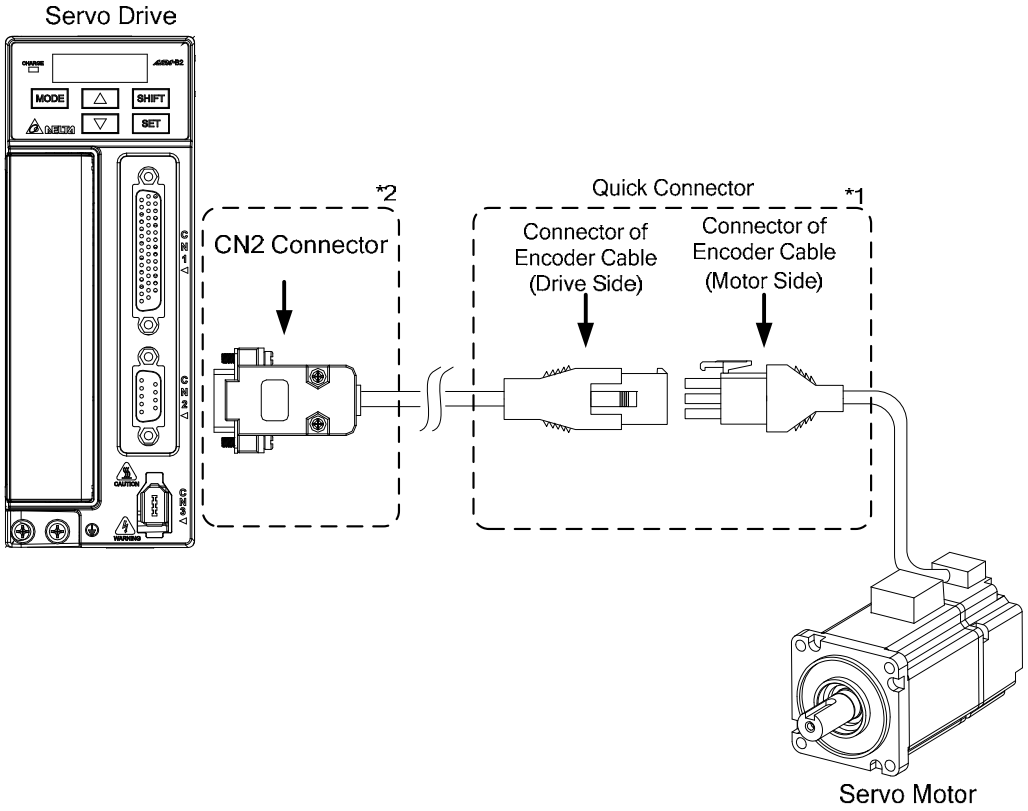

NOTE This diagram shows the connection between the servo drive and the motor encoder. It is not drawn by the practical scale and specification will be different according to the selected servo drive and motor model.

1) Please refer to the Section of Specification and Definition of Encoder Connector.
2) Please refer to section 3.4 CN2 Connector.

Motor Model	Connector of Encoder Cable
ECMA-C△0401□S (100W) ECMA-C△0602□S (200W) ECMA-C△0604□S (400W) ECMA-C△0604□H (400W) ECMA-CM0604PS (400W) ECMA-C△0804□7 (400W) ECMA-C△0807□S (750W) ECMA-C△0807□H (750W) ECMA-CM0807PS (750W) ECMA-C△0907□S (750W) ECMA-C△0910□S (1000W)	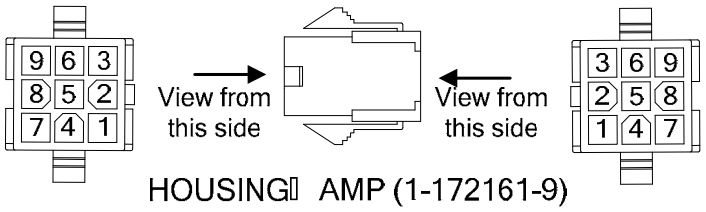

Terminal Identification of Encoder Connector

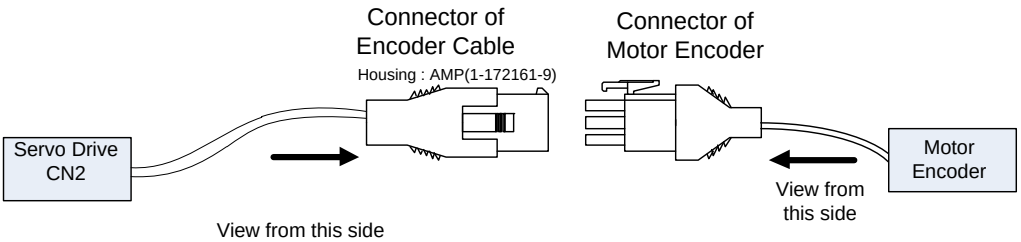

View from this side

1 Blue T+	**2** Reserved	**3** Reserved
4 Blue/Black T-	**5** Reserved	**6** Reserved
7 Red/Red & white DC+5V	**8** Black/Black & white GND	**9** Shield

The wire color of the servo drive is for reference only. Please refer to the real object.

(Encoder type is 17bit , 20bit):

3 Reserved	**2** -	**1** White T+
6 Reserved	**5** -	**4** White/Red T-
9 Shield	**8** Blue GND	**7** Brown DC+5V

(Encoder type is 2500ppr, 33bit):

3 Reserved	**2** Reserved	**1** White T+
6 Reserved	**5** Reserved	**4** White/Red T-
9 Shield	**8** Blue GND	**7** Brown DC+5V

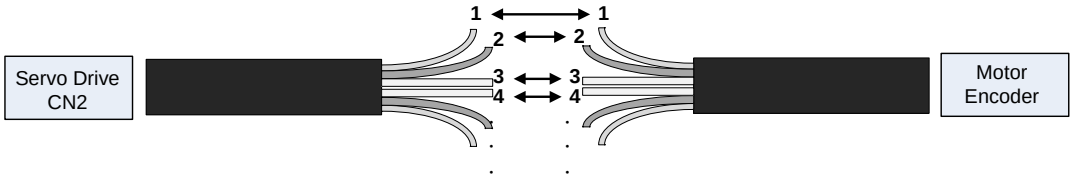

If not using housing and directly wire the cores, please follow the corresponding core number for wiring. For example, core number 1 from the servo drive CN2 should connect to core number 1 from the motor encoder; core number 2 from the servo drive CN2 should connect to core number 2 from the motor encoder and so on. Please number the cores from the servo drive in order and then connect it to the encoder.

Encoder Connection (Diagram 2)

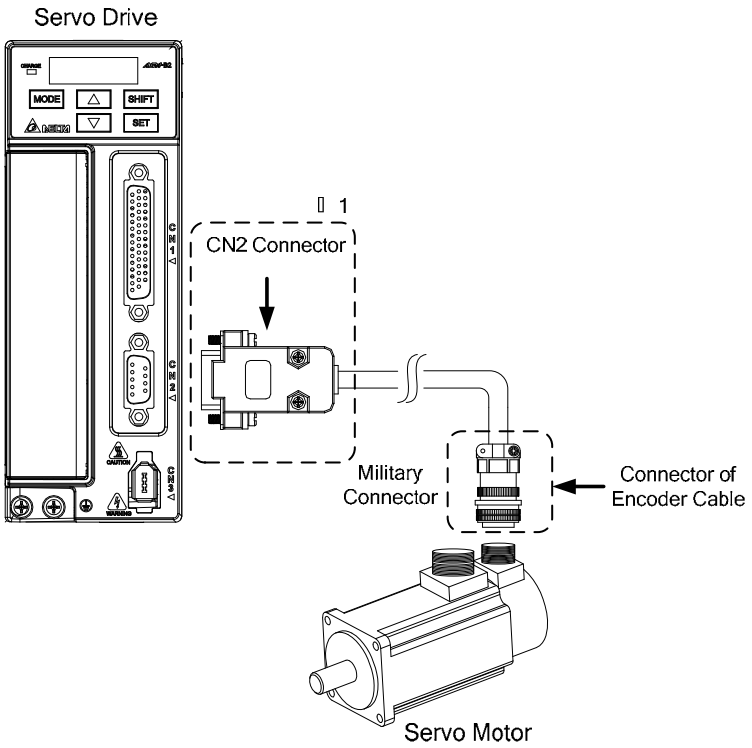

NOTE This diagram shows the connection between the servo drive and the motor encoder. It is not drawn by the practical scale and specification will be different according to the selected servo drive and motor model.

1) Please refer to section 3.4 CN2 Connector.

Motor Model	Connector of Encoder Cable
ECMA-G△1303□S (300W) ECMA-E△1305□S (500W) ECMA-G△1306□S (600W) ECMA-GM1306PS (600W) ECMA-F△1308□S (850W) ECMA-G△1309□S (900W) ECMA-GM1309PS (900W) ECMA-C△1010□S (1000W) ECMA-E△1310□S (1000W) ECMA-F△1313□S (1300W) ECMA-E△1315□S (1500W) ECMA-F△1318□S (1800W) ECMA-C△1020□S (2000W) ECMA-E△1320□S (2000W) ECMA-E△1820□S (2000W) ECMA-C△1330□4 (3000W)	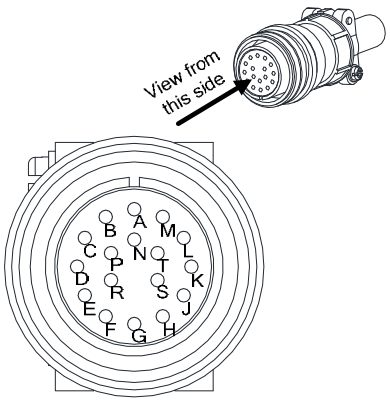 3106A-20-29S Military Connector

Pin No.	Terminal Identification	Color
A	T+	Blue
B	T -	Blue& Black
S	DC+5V	Red/Red&White
R	GND	Black/ Black& White
L	BRAID SHIELD	–

ECMA-E△1830□S (3000W) ECMA-F△1830□S (3000W) ECMA-E△1835□S (3500W)		

Please select shielded multi-core and the shielded cable should connect to the SHIELD end. Please refer to the description of Section 3.1.6.

NOTE

1) Box, (□) in servo motor model represents brake or keyway / oil seal.
2) Box, (△) in servo motor model represents encoder type. △=1: incremental, 20-bit; △=2: incremental, 17-bit; △ = 3: 2500ppr; △ = A: absolute.

3.1.6 Selection of Wiring Rod

The recommended wire rods are shown as the following table:

Servo Drive and corresponding Servo Motor		Power Wiring – Wire Diameter mm² (AWG)			
		L1c, L2c	R, S, T	U, V, W	P⊕, C
ASD-B2-0121-□	ECMA-C△0401□S	1.3 (AWG16)	2.1 (AWG14)	0.82 (AWG18)	2.1 (AWG14)
ASD-B2-0221-□	ECMA-C△0602□S				
ASD-B2-0421-□	ECMA-C△0604□S				
	ECMA-C△0604□H				
	ECMA-CM0604PS				
	ECMA-C△0804□7				
	ECMA-E△1305□S				
	ECMA-G△1303□S				
ASD-B2-0721-□	ECMA-C△0807□S				
	ECMA-C△0807□H				
	ECMA-CM0807PS				
	ECMA-C△0907□S				
	ECMA-G△1306□S				
	ECMA-GM1306PS				
ASD-B2-1021-□	ECMA-C△0910□S	1.3 (AWG16)	2.1 (AWG14)	1.3 (AWG16)	2.1 (AWG14)
	ECMA-C△1010□S				
	ECMA-E△1310□S				
	ECMA-F△1308□S				
	ECMA-G△1309□S				
	ECMA-GM1309PS				

ASD-B2-1521-□	ECMA-E△1315□S				
ASD-B2-2023-□	ECMA-C△1020□S	1.3 (AWG16)	2.1 (AWG14)	2.1 (AWG14)	2.1 (AWG14)
	ECMA-E△1320□S				
	ECMA-E△1820□S	1.3 (AWG16)	2.1 (AWG14)	3.3 (AWG12)	2.1 (AWG14)
	ECMA-F△1313□S				
	ECMA-F△1318□S				
ASD-B2-3023-□	ECMA-C△1330□4				
	ECMA-E△1830□S				
	ECMA-E△1835□S				
	ECMA-F△1830□S				

Servo Drive Model	Encoder Wiring - Wire Diameter mm^2 (AWG)			
	Size	Number	Specification	Standard Length
ASD-B2-0121-□	0.13 (AWG26)	10 core (4 pair)	UL2464	3m (9.84ft.)
ASD-B2-0221-□				
ASD-B2-0421-□				
ASD-B2-0721-□				
ASD-B2-1021-□				
ASD-B2-1521-□				
ASD-B2-2023-□				
ASD-B2-3023-□				

NOTE

1) Please use shielded twisted-pair cable for encoder wiring so as to reduce the interference of the noise.
2) The shield should connect to the ⏚ phase of SHIELD.
3) Please follow the Selection of Wire Rod when wiring in order to avoid the danger it may occur.
4) Box, (□) at the end of the servo drive model represents the model code of ASDA-B2. Please refer to the model information of the product you purchased.
5) (△), in servo motor model represents encoder type. △=1: incremental type, 20-bit; △=2: incremental type, 17, bit.
6) Box, (□) in servo motor model represents brake or keyway / oil seal.
7) Box, (△) in servo motor model represents encoder type. △=1: incremental, 20-bit; △=2: incremental, 17-bit; △ = 3: 2500ppr; △ = A: absolute.

3.2 Basic Wiring

3.2.1 200 W (included) and Models Below (without built-in regenerative resistor and cooling fan)

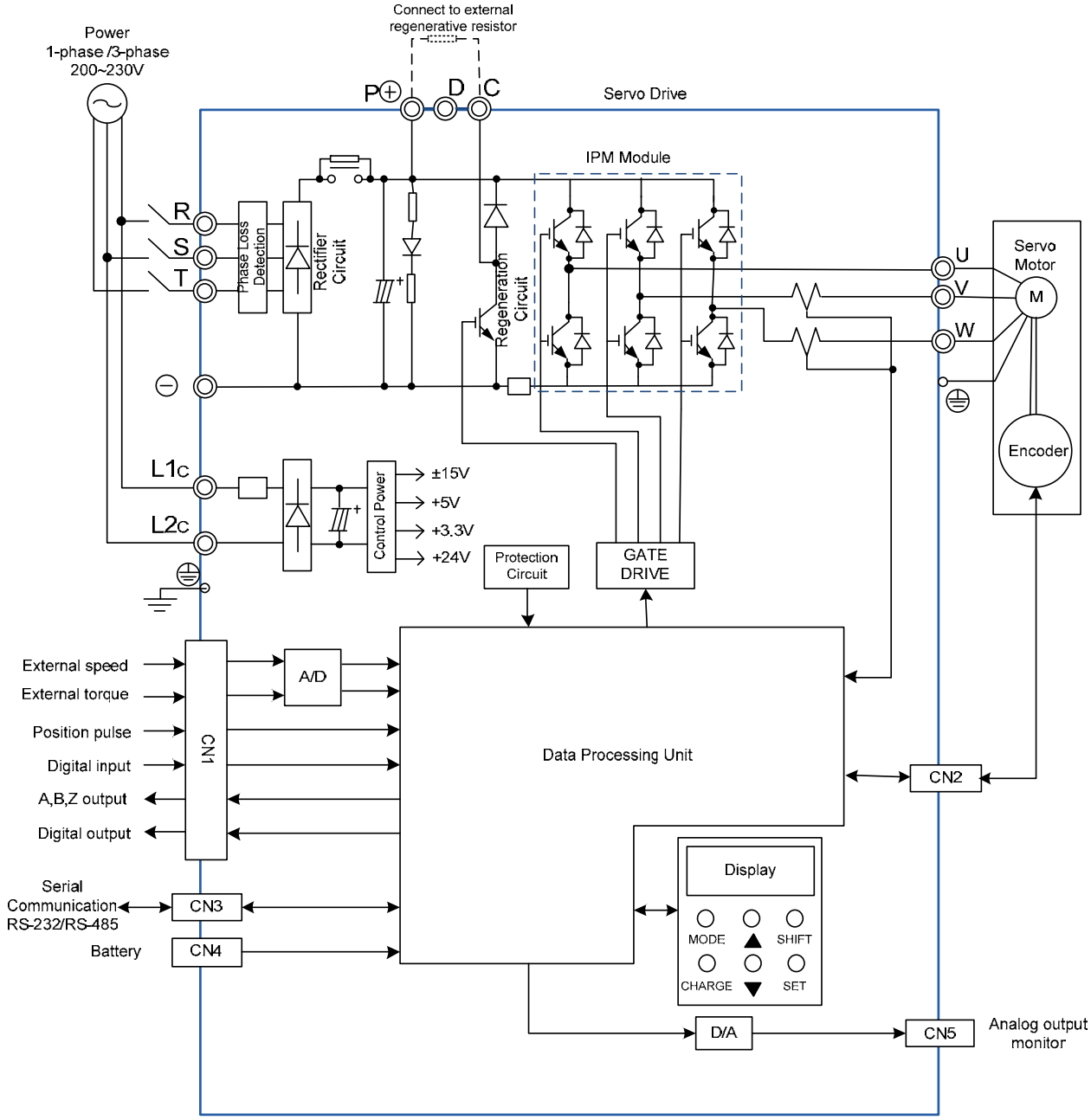

3.2.2 400 W ~ 750 W Models
(with built-in regenerative resistor, but without cooling fan)

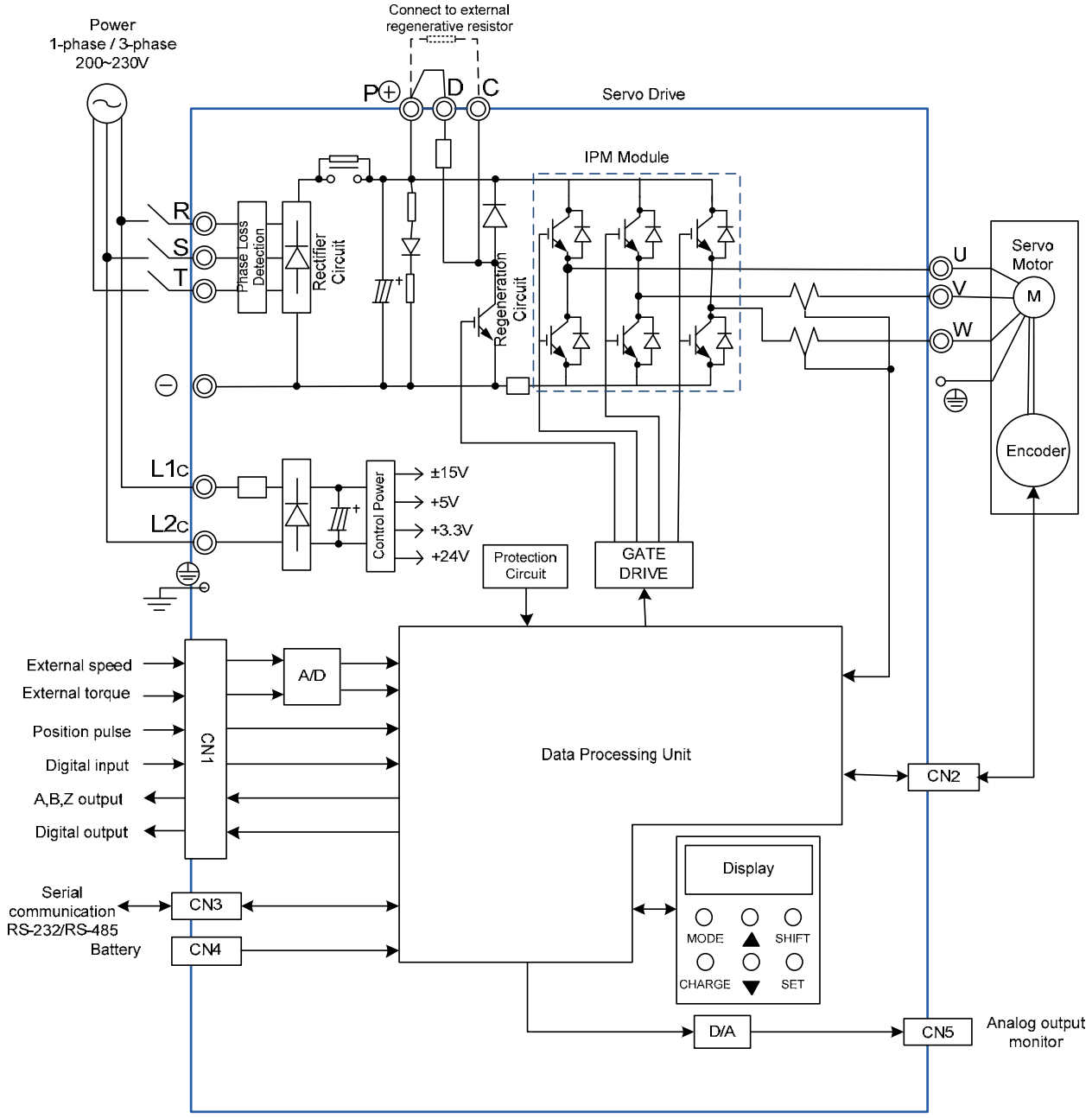

3.2.3 1 kW~3 kW Models (with built-in regenerative resistor and cooling fan)

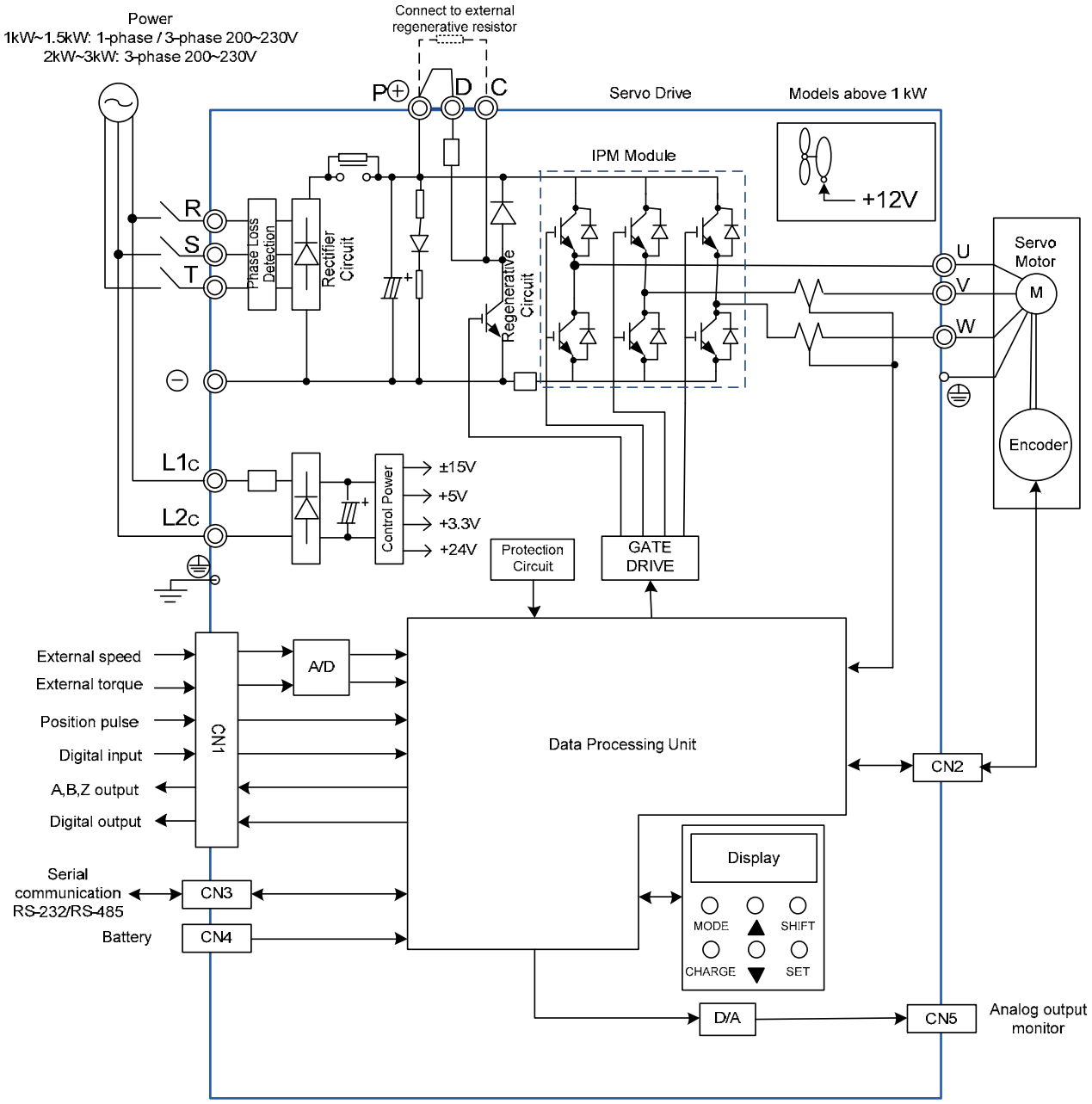

3.3 I / O Signal (CN1) Connection

3.3.1 I/O Signal (CN1) Connector Terminal Layout

In order to have a more flexible communication with the master, 6 programmable Digital Outputs (DO) and 9 programmable Digital Inputs (DI) are provided. The setting of 9 digital inputs and 6 digital outputs of each axis provided by ASDA-B2, which are parameter P2-10~P2-17, P2-36 and parameter P2-18~P2-22, P2-37 respectively. In addition, the differential output encoder signal, A+, A-, B+, B-, Z+ and Z-, input of analog torque command, analog speed/position command and pulse position command are also provided. The followings are the pin diagrams.

Side View

Rear View

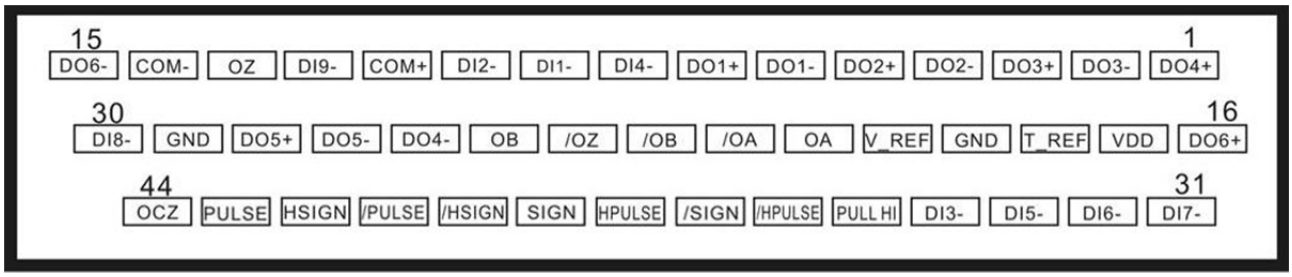

1	DO4+	Digital output
2	DO3-	Digital output
3	DO3+	Digital output
4	DO2-	Digital output
5	DO2+	Digital output
6	DO1-	Digital output
7	DO1+	Digital output
8	DI4-	Digital input
9	DI1-	Digital input
10	DI2-	Digital input
11	COM+	Power input (12~24V)
12	DI9-	Digital input
13	OZ	Encoder Z pulse Line-driver output
14	COM-	VDD(24V) power ground
15	DO6-	Digital output
16	DO6+	Digital output
17	VDD	+24V power output (for external I/O)
18	T_REF	Analog torque Input
19	GND	Analog input signal ground
20	V_REF	Analog speed input (+)
21	OA	Encoder A pulse output
22	/OA	Encoder /A pulse output
23	/OB	Encoder /B pulse output
24	/OZ	Encoder /Z pulse output
25	OB	Encoder B pulse output
26	DO4-	Digital output
27	DO5-	Digital output
28	DO5+	Digital output
29	GND	Analog input signal ground
30	DI8-	Digital input
31	DI7-	Digital input
32	DI6-	Digital input
33	DI5-	Digital input
34	DI3-	Digital input
35	PULL HI	Pulse applied power
36	/HPULSE	High-speed position pulse (-)
37	/SIGN	Position sign (-)
38	HPULSE	High-speed position pulse (+)
39	SIGN	Position sign (+)
40	/HSIGN	High-speed position sign (-)
41	/PULSE	Pulse input (-)
42	HSIGN	High-speed position sign (+)
43	PULSE	Pulse input (+)
44	OCZ	Encoder Z pulse Line-driver output

3.3.2 Signals Explanation of Connector CN1

The following details the signals listed in previous section:

General Signals

Signal		Pin No	Funciton	Wiring Diagram (Refer to 3.3.3)
Analog Command (input)	V_REF	20	(1) The speed command of the motor is -10 V ~ +10 V which means the speed command is -3000 ~ +3000 r/min (default). It can change the corresponding range via parameters. (2) The position command of the motor is -10 V ~ +10 V which means the position command is -3 cycles ~ +3 cycles (default).	C1
	T_REF	18	The torque command of the motor is -10 V ~ +10 V which means the rated torque command of -100 % ~ +100 %.	C1
Position Pulse (Input)	PULSE /PULSE SIGN /SIGN PULL HI	43 41 39 37 35	Position pulse can be inputted by Line Driver (single phase max. frequency 500KHz) or open-collector (single phase max. frequency 200 KHz). Three kinds of command type can be selected via P1-00, CW pulse + CCW pulse, pulse + direction, A pulse + B pulse. When position pulse uses open-collector, the terminal should be connected to an external applied power in order to pull high.	C3/C4
High-speed Position Pulse Input	HPULSE /HPULSE HSIGN /HSIGN	38 36 42 40	High position pulse command only accepts differential input (+5V, Line-Drive). The max. input frequency is 4MHz. Three kinds of command type can be selected via P1-00, CW pulse + CCW pulse, pulse + direction, A pulse + B pulse.	C4-2
Position Pulse (Output)	OA /OA	21 22	Encoder signal output A, B, Z (Line Drive output)	C13/C14
	OB /OB	25 23		
	OZ /OZ	13 24		
	OCZ	44	Encoder signal output Z (Open-collector output).	-

Power	VDD	17	VDD is the +24 V power provided by the drive and is for Digital Input (DI) and Digital Output (DO) signal. The maximum current is 500 mA.	-
	COM+ COM-	11 14	COM+ is the common input of Digital Input (DI) and Digital Output (DO) voltage. When using VDD, VDD should be connected to COM+. If not using, it needs to apply the external power (+12 V ~ + 24 V). Its positive end should connect to COM+ and the negative end should connect to COM-.	
	GND	19	VCC voltage is based on GND.	

There are numerous operation mode of this servo drive (please refer to Chapter 6.1). Each operation mode needs different I/O signal. In order to use the terminal in a more efficient way, the selection of I/O signal has to be programmable. That is to say, users can choose the desired DI/DO signal to meet the demand. Basically, the default setting of DI/DO signal has already have the appropriate function which can satisfy the demand of normal application.

Users have to select the operation mode based on the needs first (please refer to Chapter 6.1 for the introduction of each mode) and refer to the following DI/DO table to know the corresponding default setting of DI/DO signal and Pin No of the selected mode in order to conduct the wiring.

The table below lists the default setting of DI/DO signal function and pin No:

The explanation of DO signal default setting is as the followings.

DO Signal	Operation Mode	Pin No.		Details	Wiring Method (Refer to 3.3.3)
		+	-		
SRDY	ALL	7	6	When the servo drive applies to the power and no alarm (ALRM) occurs in control circuit and motor power circuit, this DO is ON.	C5/C6/C7/C8
SON	N/A	-	-	When the DI.SON is ON and the motor servo circuit can operate smoothly, this DO is ON.	
ZSPD	ALL	5	4	When the motor speed is slower than the setting value of parameter P1-38, this DO is ON.	
TSPD	ALL (except PT)	-	-	When the motor actual speed (r/min) is faster than the setting value of parameter P1-39, this DO is ON.	

TPOS	PT, PT-S, PT-T	1	26	When the deviation between the motor command and actual position (PULSE) is smaller than the setting value of parameter P1-54, this DO is ON.	
TQL	Not assigned	-	-	When torque is limiting, this DO is ON.	
ALRM	ALL	28	27	When the alarm occurs (except forward/reverse limit, emergency stop, communication error, under voltage), this DO is ON.	
BRKR	ALL	-	-	Control contact of brake.	
OLW	ALL	-	-	When the overload level is reached, this DO is ON.	
WARN	ALL	-	-	A warning occurs. When it is in the status of forward/reverse limit, emergency stop, communication error, under voltage, this DO is ON.	
S_CMP	S, Sz	-	-	When the deviation between the speed command and the feedback speed of the motor is smaller than the setting value of parameter P1-47, this DO is ON.	

NOTE

1) For example, if the user selects S mode, pin 3 and 2 are TSPD.
2) The unlisted Pin No means the signal is not the preset one. If users want to use it, parameters need to be changed and set as the desired ones. Please refer to Section 3.3.4 for further details.

The explanation of DI signal default setting is as the followings

<table>
<tr><th>DI Signal</th><th>Operation Mode</th><th>Pin No.</th><th>Function</th><th>Wiring Method (Refer to 3.3.3)</th></tr>
<tr><td>SON</td><td>ALL</td><td>9</td><td>When DI is ON, the servo circuit will be activated and the motor coil will generate current.</td><td rowspan="5">C9/C10
C11/C12</td></tr>
<tr><td>ARST</td><td>ALL</td><td>33</td><td>When the alarm (ALRM) occurs, this signal is used to reset the servo drive and output the signal, Ready (SRDY) again.</td></tr>
<tr><td>GAINUP</td><td>ALL</td><td>-</td><td>It is for switching the controller gain.</td></tr>
<tr><td>CCLR</td><td>PT</td><td>10</td><td>It is for clearing the deviation counter.</td></tr>
<tr><td>ZCLAMP</td><td>ALL</td><td>-</td><td>When this DI is ON and the motor speed is slower than the setting of P1-38, the motor position will be locked when the signal is triggered.</td></tr>
<tr><td>CMDINV</td><td>T, S</td><td>-</td><td>When this DI is ON, the motor will operate in the opposite direction.</td><td rowspan="7">C9/C10
C11/C12</td></tr>
<tr><td>TRQLM</td><td>S, Sz</td><td>10</td><td>ON means the torque limit command is effective.</td></tr>
<tr><td>SPDLM</td><td>T, Tz</td><td>10</td><td>ON means the speed limit command is effective.</td></tr>
<tr><td>STOP</td><td>-</td><td>-</td><td>Motor stops.</td></tr>
<tr><td>SPD0</td><td rowspan="2">S, Sz, PT-S, S-T</td><td>34</td><td rowspan="2">Select the source of speed command:
<table>
<tr><th>SPD1</th><th>SPD0</th><th>Command source</th></tr>
<tr><td>OFF</td><td>OFF</td><td>S mode: analog input
Sz mode: 0</td></tr>
<tr><td>OFF</td><td>ON</td><td>P1-09</td></tr>
<tr><td>ON</td><td>OFF</td><td>P1-10</td></tr>
<tr><td>ON</td><td>ON</td><td>P1-11</td></tr>
</table></td></tr>
<tr><td>SPD1</td><td>8</td></tr>
<tr><td>TCM0</td><td>PT, T, Tz, PT-T</td><td>34</td><td rowspan="2">Select the source of torque command:
<table>
<tr><th>TCM1</th><th>TCM0</th><th>Command source</th></tr>
<tr><td>OFF</td><td>OFF</td><td>T mode: analog input
Tz mode: 0</td></tr>
<tr><td>OFF</td><td>ON</td><td>P1-12</td></tr>
<tr><td>ON</td><td>OFF</td><td>P1-13</td></tr>
<tr><td>ON</td><td>ON</td><td>P1-14</td></tr>
</table></td></tr>
<tr><td>TCM1</td><td>S-T</td><td>8</td></tr>
</table>

DI Signal	Operation Mode	Pin No.	Function	Wiring Method (Refer to 3.3.3)
S-P	PT-S	31	Mode switching. OFF: Speed; ON: Position	
S-T	S-T	31	Mode switching. OFF: Speed; ON: Torque	
T-P	PT-T	31	Mode switching. OFF: Torque; ON: Position	
EMGS	ALL	30	It is contact **B** and has to be ON frequently; otherwise the alarm (ALRM) will occur.	
NL(CWL)	PT, S, T Sz, Tz	32	Reverse inhibit limit (contact **B**) and has to be ON frequently; or the alarm (ALRM) will occur.	
PL(CCWL)	PT, S, T Sz, Tz	31	Forward inhibit limit (contact **B**) and has to be ON frequently; or the alarm (ALRM) will occur.	
TLLM	N/A	-	Reverse operation torque limit	
TRLM	N/A	-	Forward operation torque limit	
JOGU	ALL	-	When this DI is ON, the motor JOG operates in forward direction.	
JOGD	ALL	-	When this DI is ON, the motor JOG operates in reverse direction.	
GNUM0	PT, PT-S	-	Electronic gear ratio (numerator) selection 0 (Please refer to P2-60~P2-62 for gear ratio selection (numerator).)	
GNUM1	PT, PT-S	-	Electronic gear ratio (numerator) selection 1 (Please refer to P2-60~P2-62 for gear ratio selection (numerator).)	
INHP	PT, PT-S	-	In position mode, when this DI is ON, the external pulse input command is not working.	C9/C10 C11/C12

The default setting of DI and DO in each operation mode is shown as the followings. Please note that the following table neither detail the information as the previous one nor show the Pin number of each signal. However, each operation mode is separated in different columns in order to avoid the confusion.

Table 3.1 Default Value of DI Function

Symbol	DI Code	Function	PT	S	T	Sz	Tz	PT-S	PT-T	S-T
SON	0x01	Servo On	DI1	DI1	DI1	DI1	DI1	DI1	DI1	DI1
ARST	0x02	Alarm Reset	DI5	DI5	DI5	DI5	DI5			
GAINUP	0x03	Gain switching								
CCLR	0x04	Pulse clear	DI2					DI2	DI2	
ZCLAMP	0x05	Zero speed CLAMP								
CMDINV	0x06	The input command will be in reverse direction								
Reserved	0x07	Reserved								
Reserved	0x08	Reserved								
TRQLM	0x09	Torque limit		DI2		DI2				
SPDLM	0x10	Speed limit			DI2		DI2			
STOP	0x46	Motor stop								
SPD0	0x14	Speed command selection 0		DI3		DI3		DI3		DI3
SPD1	0x15	Speed command selection 1		DI4		DI4		DI4		DI4
TCM0	0x16	Torque command selection 0	DI3		DI3		DI3		DI3	DI5
TCM1	0x17	Torque command selection 1	DI4		DI4		DI4		DI4	DI6
S-P	0x18	Mode switch between speed and position command						DI7		
S-T	0x19	Mode switch between speed and torque command								DI7
T-P	0x20	Mode switch between torque and position command							DI7	
Reserved	0x2C	Reserved								
Reserved	0x2D	Reserved								
EMGS	0x21	Emergency stop	DI8	DI8	DI8	DI8	DI8	DI8	DI8	DI8
NL(CWL)	0x22	Reverse inhibit limit	DI6	DI6	DI6	DI6	DI6			
PL(CCWL)	0x23	Forward inhibit limit	DI7	DI7	DI7	DI7	DI7			
Reserved	0x24	Reserved								
TLLM	0x25	Reverse operation torque limit								

Symbol	DI Code	Function	PT	S	T	Sz	Tz	PT-S	PT-T	S-T
TRLM	0x26	Forward operation torque limit								
Reserved	0x27	Reserved								
Reserved	0x36	Reserved								
JOGU	0x37	Forward JOG input								
JOGD	0x38	Reverse JOG input								
GNUM0	0x43	Electronic gear ratio (Numerator) selection 0								
GNUM1	0x44	Electronic gear ratio (Numerator) selection 1								
INHP	0x45	Pulse inhibit input								

NOTE

1) For corresponding pin of DI1~DI8, please refer to section 3.3.1.

Table 3.2 Default Value of DO Function

Signal	DO Code	Function	PT	S	T	Sz	Tz	PT-S	PT-T	S-T
SRDY	0x01	Servo ready	DO1	DO1	DO1	DO1	DO1	DO1	DO1	DO1
SON	0x02	Servo On								
ZSPD	0x03	Zero-speed reached	DO2	DO2	DO2	DO2	DO2	DO2	DO2	DO2
TSPD	0x04	Reach the target speed		DO3	DO3	DO3	DO3	DO3	DO3	DO3
TPOS	0x05	Reach the target position	DO4					DO4	DO4	
TQL	0x06	Torque limit								
ALRM	0x07	Servo alarm	DO5	DO5	DO5	DO5	DO5	DO5	DO5	DO5
BRKR	0x08	Brake		DO4	DO4	DO4	DO4			
OLW	0x10	Early warning for overload								
WARN	0x11	Servo warning								
SNL(SCWL)	0x13	Reverse software limit								
SPL(SCCWL)	0x14	Forward software limit								
SP_OK	0x19	Target speed								

Signal	DO Code	Function	PT	S	T	Sz	Tz	PT-S	PT-T	S-T
		reached								

NOTE

1) For corresponding pin DO1~DO6, please refer to section 3.3.1.

3.3.3 Wiring Diagrams (CN1)

The valid voltage range of analog input command in speed and torque mode is -10V ~+10V. The command value can be set via relevant parameters.

C1: Speed / Torque analog signal input

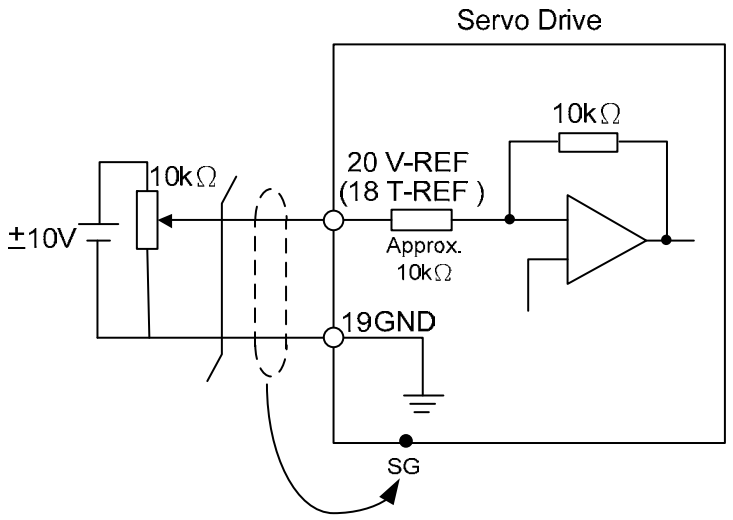

C2: Analog monitor output (MON1, MON2)

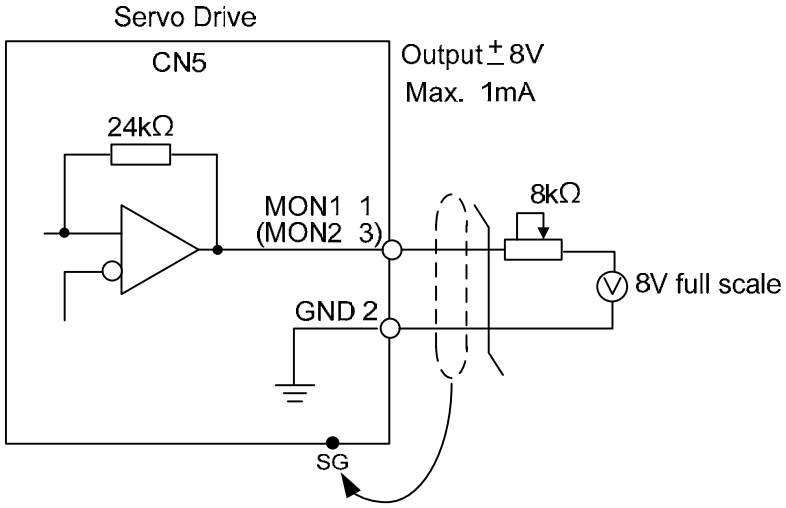

Pulse command can be input by the way of open-collector or Line driver. The maximum input pulse of Line driver is 500 kpps and 200 kpps for open-collector.

C3-1: The source of pulse input is open-collector NPN equipment which applies the internal power of the servo drive.

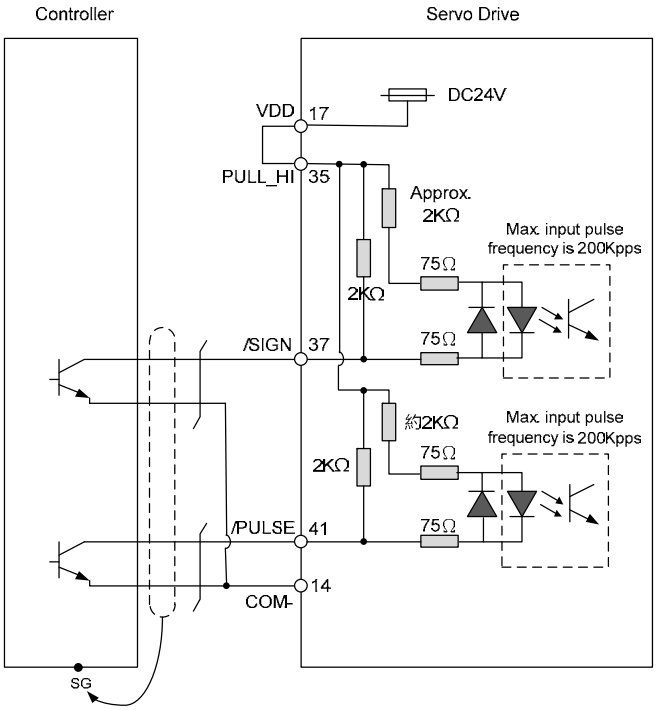

C3-2: The source of pulse input is open-collector PNP equipment which applies the internal power of the servo drive.

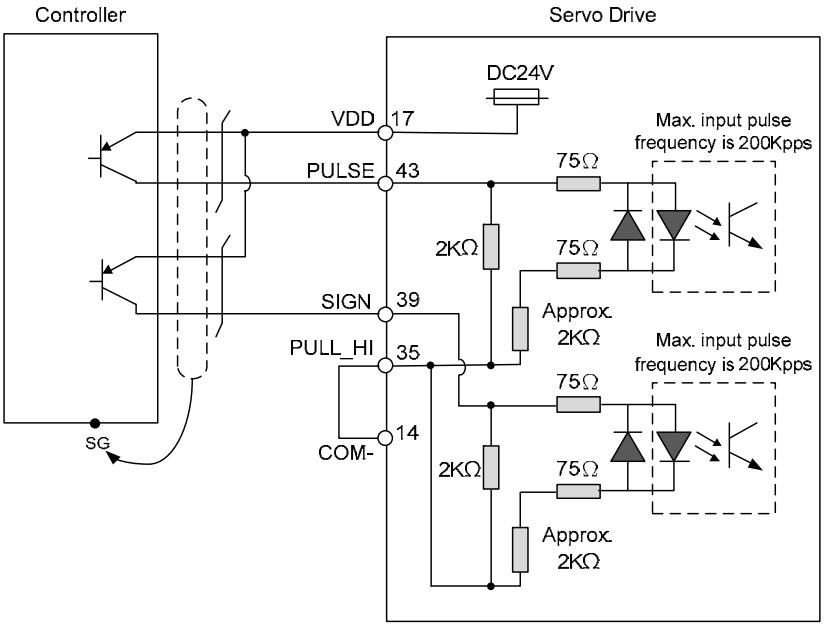

C3-3: The source of pulse input is open-collector NPN equipment which applies the external power of the servo drive.

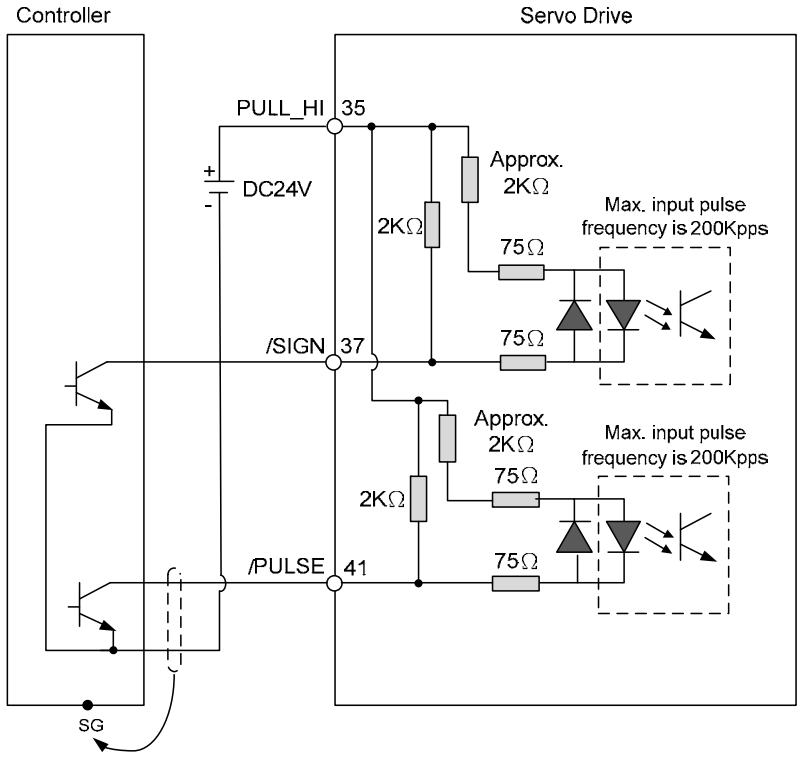

C3-4: The source of pulse input is open-collector PNP equipment which applies the external power of the servo drive.

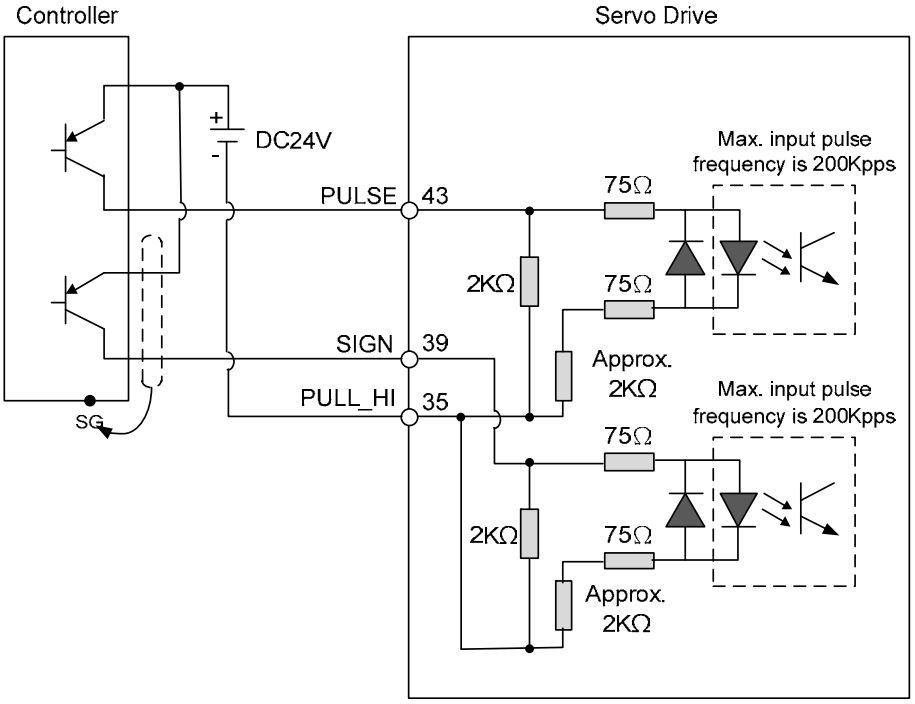

WARNING

➢ ***Caution: Do not apply to dual power or it may damage the servo drive.***

C4-1: Pulse input (Line driver) can only apply to 5V power. Never apply to 24V power.

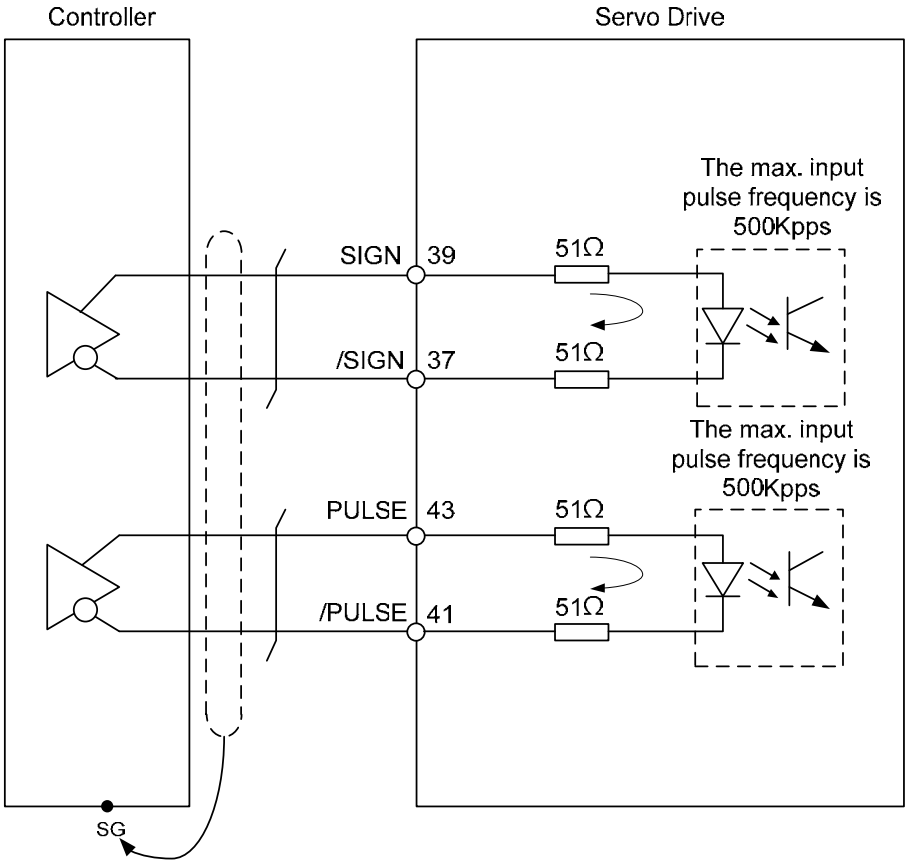

C4-2: High-speed pulse input (Line driver) can only apply to 5V power. Never apply to 24V power.

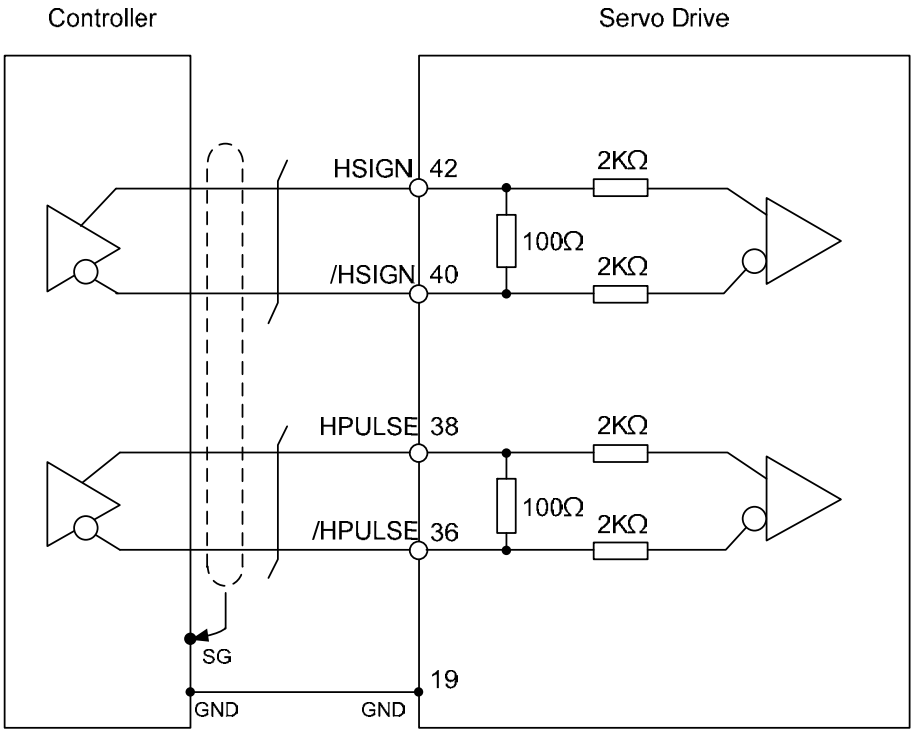

WARNING

- ***The high-speed pulse input interface of the servo drive is not the isolated interface. In order to reduce the interference of the noise, it is suggested that the terminal ground of the controller and the servo drive should be connected to each other.***

When the drive connects to inductive load, the diode has to be installed. (The permissible current is under 40mA. The surge current is under 100mA.)

C5: Wiring of DO signal. The servo drive applies to the internal power and the resistor is general load.

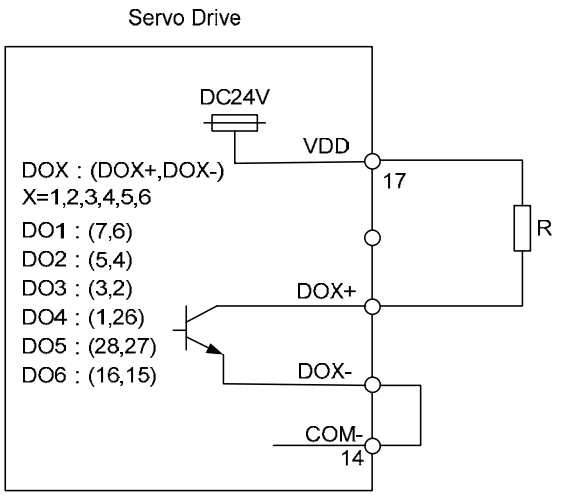

C6: Wiring of DO signal. The servo drive applies to the internal power and the resistor is inductive load.

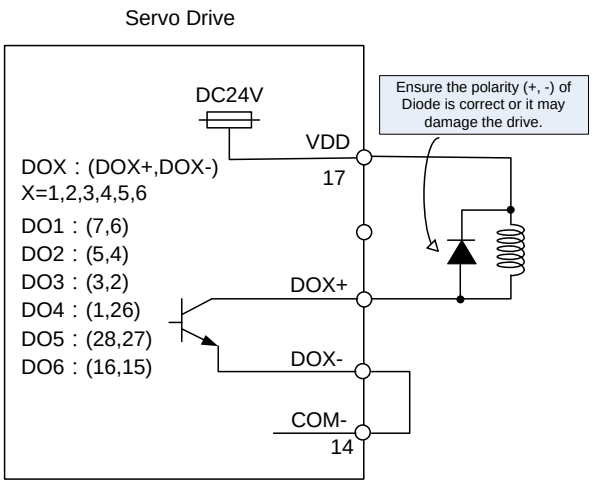

C7: Wiring of DO signal. The servo drive applies to the external power and the resistor is general load.

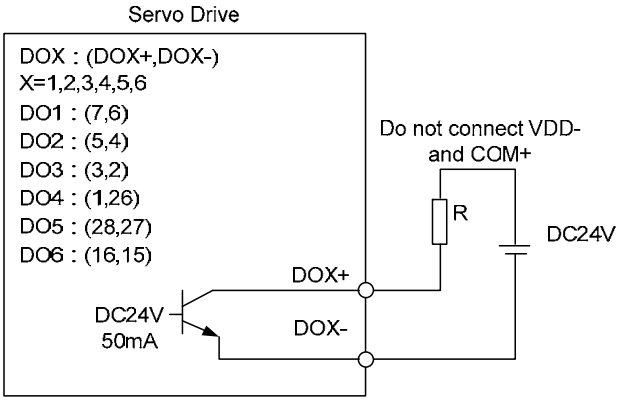

C8: Wiring of DO signal. The servo drive applies to the external power and the resistor is inductive load.

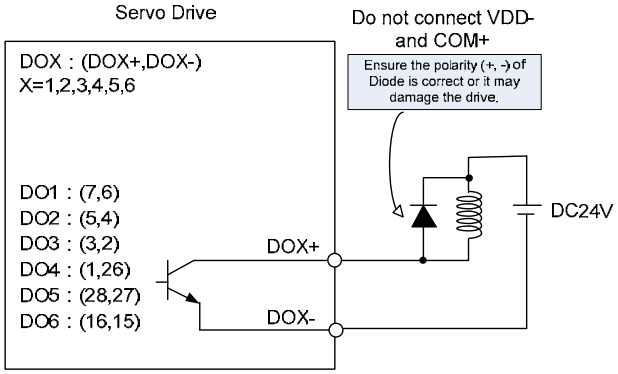

Input signal via relay or open-collector transistor

NPN transistor, common emitter (E) mode (**SINK** mode)

C9: Wiring of DI signal. The servo drive applies to the internal power.

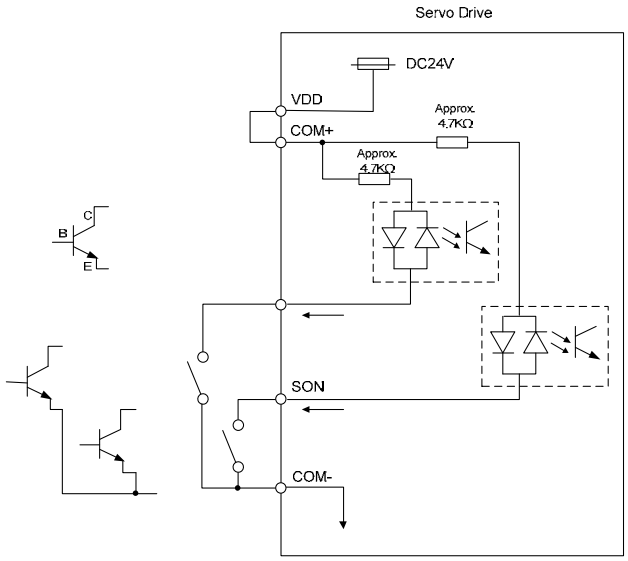

C10: Wiring of DI signal. The servo drive applies to the external power.

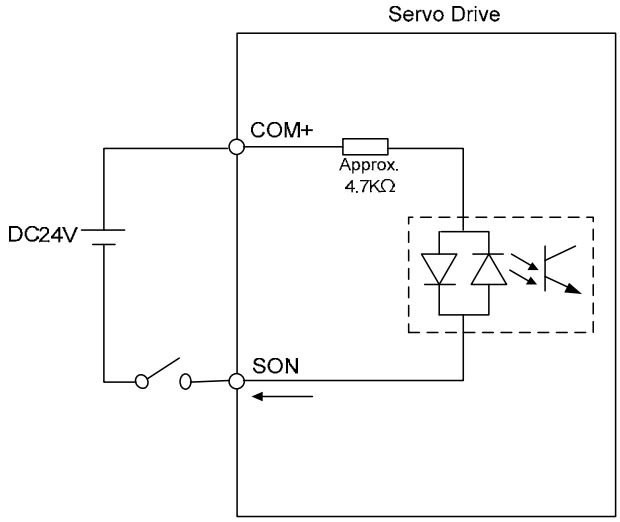

PNP transistor, common emitter (E) mode (**SOURCE** mode)

C11: Wiring of DI signal. The servo drive applies to the internal power.

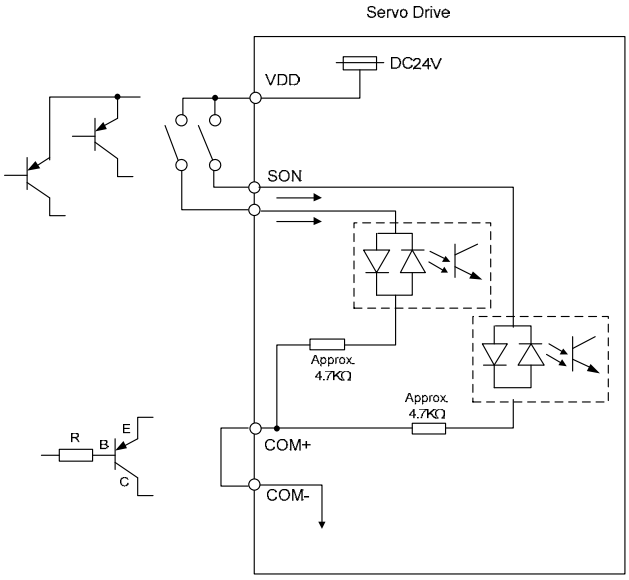

C12: Wiring of DI signal. The servo drive applies to the external power.

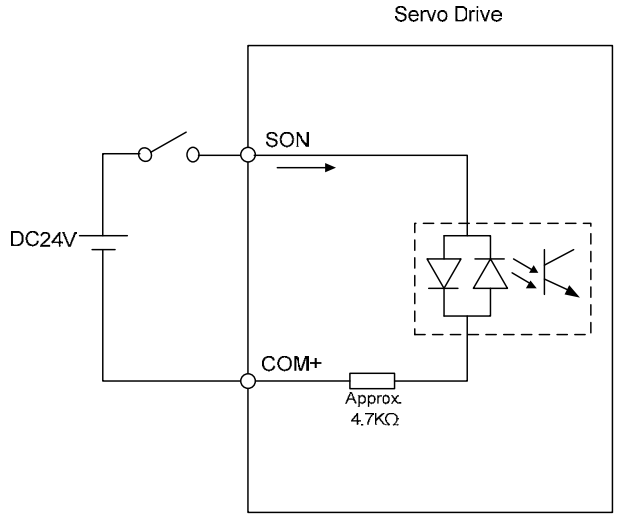

WARNING

➢ ***Caution: Do not apply to dual power or it may damage the servo drive.***

C13: Encoder signal output (Line driver)

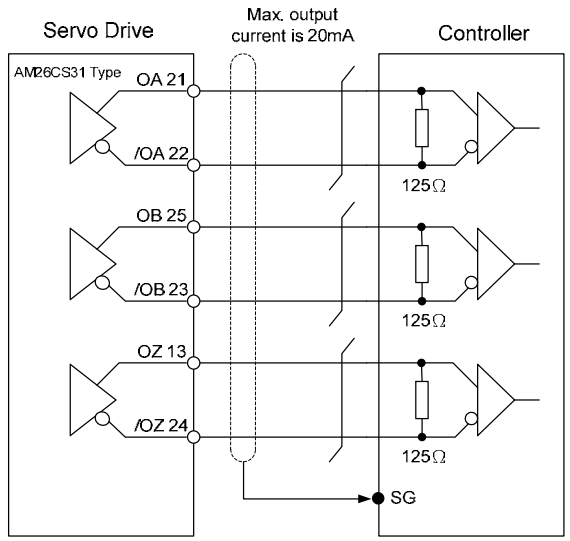

C14: Encoder signal output (Opto-isolator)

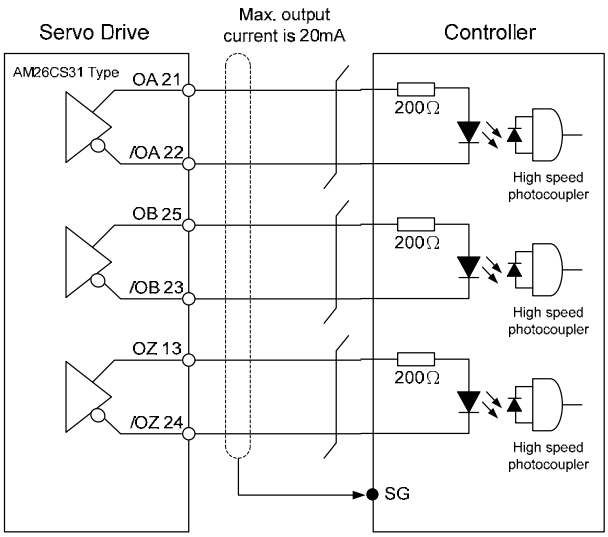

C15: Encoder OCZ output (Open-collector Z-pulse output)

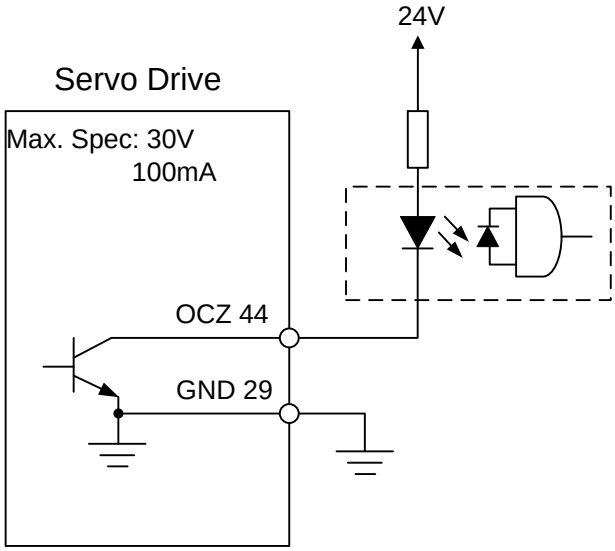

3.3.4 DI and DO Signal Specified by Users

If the default setting of DI/DO signal cannot satisfy the need, self-set the DI/DO signal will do and easy. The signal function of DI1 ~ 9 and DO1 ~ 6 is determined by parameter P2-10 ~ P2-17, P2-36 and parameter P2-18 ~ P2-22, P2-37 respectively. Please refer to Chapter 7.2, which shown as the following table. Enter DI or DO code in the corresponding parameter to setup DI/DO.

Signal Name		Pin No.	Parameter
DI	DI1-	CN1-9	P2-10
	DI2-	CN1-10	P2-11
	DI3-	CN1-34	P2-12
	DI4-	CN1-8	P2-13
	DI5-	CN1-33	P2-14
	DI6-	CN1-32	P2-15
	DI7-	CN1-31	P2-16
	DI8-	CN1-30	P2-17
	DI9	CN1-12	P2-36

Signal Name		Pin No.	Parameter
DO	DO1+	CN1-7	P2-18
	DO1-	CN1-6	
	DO2+	CN1-5	P2-19
	DO2-	CN1-4	
	DO3+	CN1-3	P2-20
	DO3-	CN1-2	
	DO4+	CN1-1	P2-21
	DO4-	CN1-26	
	DO5+	CN1-28	P2-22
	DO5-	CN1-27	
	DO6+	CN1-16	P2-37
	DO6-	CN1-15	

3.4 CN2 Connector

There are two types of CN2 encoder cable which shown as below:

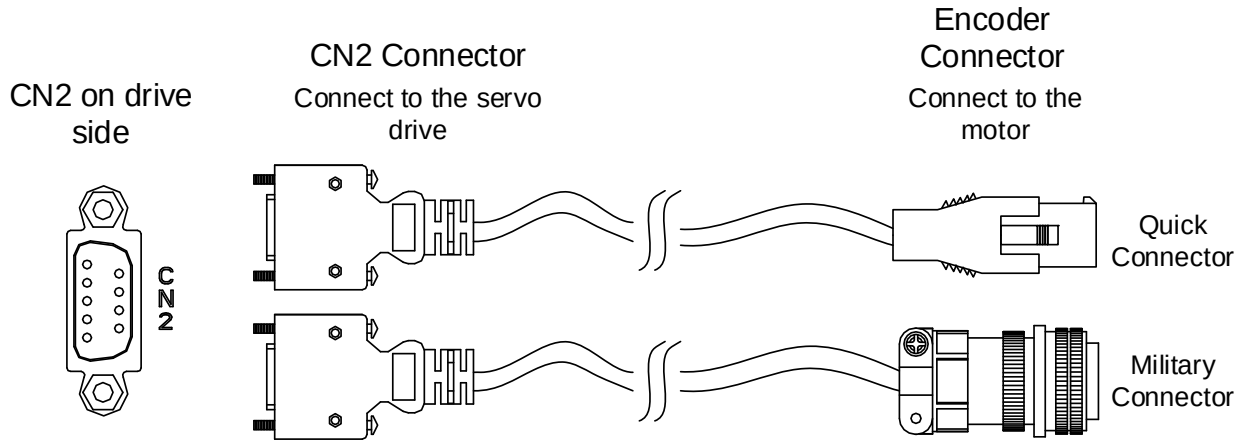

Definition of two sides:

(1) Encoder Connector

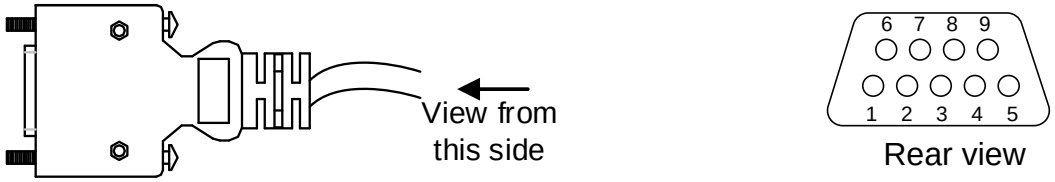

(2) Motor Connector

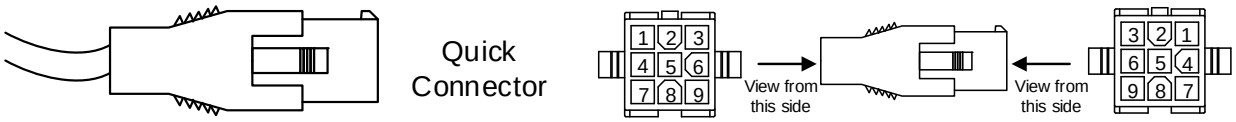

HOUSING：AMP (1-172161-9)

3106A-20-29S

The definition of each signal is as follows:

Drive Connector			Encoder Connector		
PIN No.	Terminal Symbol	Description	Military Connector	Quick Connector	Color
4	T+	Serial communication signal input / output (+)	A	1	Blue
5	T-	Serial communication signal input / output (-)	B	4	Blue & Black
8	+5V	+5V power supply	S	7	Red / Red & White
7, 6	GND	Ground	R	8	Black / Black & White
Shell	Shielding	Shielding	L	9	-

The shielding procedures of CN2 encoder connector are as followings:

(1) Solder the centre cores on the metal part of the connector adequately for good ground contact with the plate and shielding.

(2) Trim the ends of the cores and install the cores with shielding into the plastic case of the connector as shown in the figure.

(3) Tighten the screws to complete the shielding.

3.5 Wiring of CN3 Connector

Layout of CN3 Connector

The servo drive connects to the personal computer via communication connector. The user can operate the servo drive via MODBUS, PLC or HMI. There are two common communication interfaces, RS-232 and RS-485. Among them, RS-232 is more common. Its communication distance is about 15 meter. If the user selects RS-485, its transmission distance is longer and supports more than one servo drives for connection.

CN3 Port (Female)

Side View

Rear View

Please read carefully the following note. Improper wiring may cause damage or injury!

PIN No.	Signal Name	Terminal Symbol	Function and Description
1	Grounding	GND	+ 5 V connects to the signal terminal
2	RS-232 data transmission	RS-232_TX	The drive transmits the data The connector connects to RS-232 of PC
3	-	-	Reserved
4	RS-232 data receiving	RS-232_RX	The drive receives the data The connector connects to RS-232 of PC
5	RS-485 data transmission	RS-485(+)	The drive transmits the date to differential terminal (+)
6	RS-485 data transmission	RS-485(-)	The drive transmits the date to differential terminal (-)

NOTE

1) Please refer to section 8.1 for RS-485 wiring.
2) Two kinds of communication wire of IEEE1394 are commercially available. One of the internal ground terminals (Pin 1) will short circuit with the shielding and will damage the drive. Do not connect GND to the shielding.

3.6 Analog Monitor Output Connector - CN5

Analog Monitor Output Connector CN5 is used to monitor the motor operation status. Motor characteristics such as speed and current can be represented by analog voltages. The drive provides two channels which can be configured with the parameter P0-03 to output the desired characteristics. Output voltage is reference to the power ground (GND).

CN5 Terminal Layout and Identification

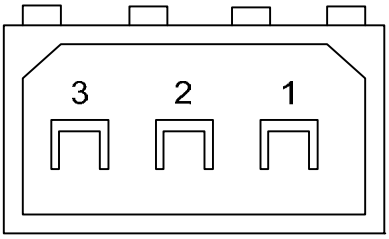

CN5

Signal Cable for CN5 Connector

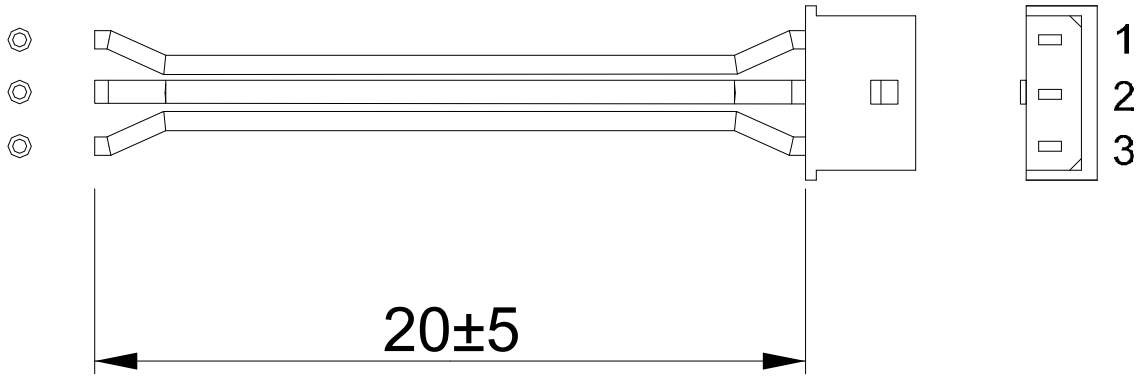

PIN No.	Signal Symbol	Function and Description	Color	Wiring Diagram (Refer to 3.3.3)
1	MON1	Monitor analog data 1	Red	C2
2	GND	Ground	White	
3	MON2	Monitor analog data 2	Black	

3.7 Standard Connection Example

3.7.1 Position (PT) Control Mode

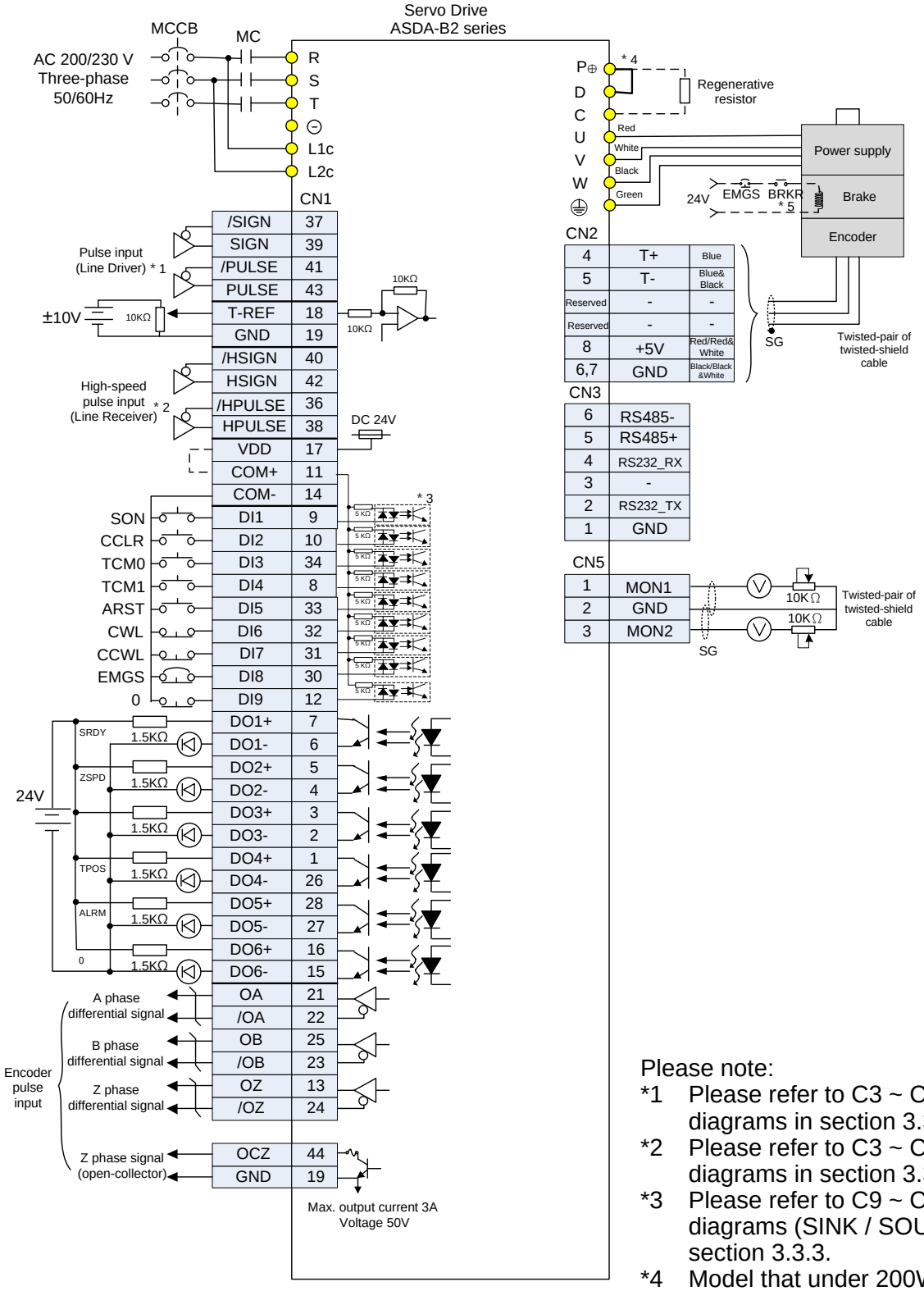

Please note:

*1 Please refer to C3 ~ C4 wiring diagrams in section 3.3.3.

*2 Please refer to C3 ~ C4 wiring diagrams in section 3.3.3.

*3 Please refer to C9 ~ C12 wiring diagrams (SINK / SOURCE mode) in section 3.3.3.

*4 Model that under 200W has no built-in regenerative resistor.

*5 The brake coil has no polarity.

3.7.2 Speed Control Mode

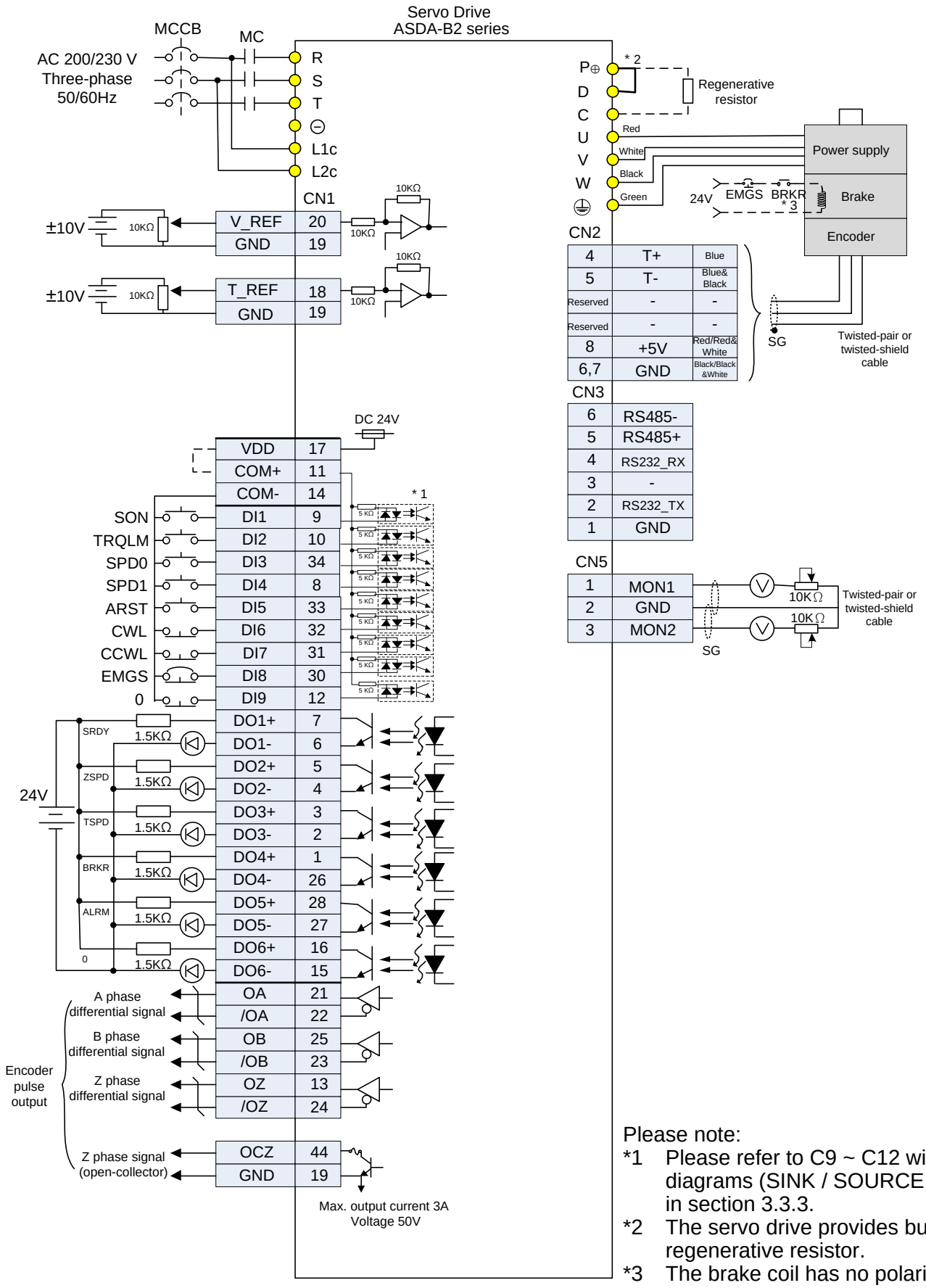

Please note:

*1 Please refer to C9 ~ C12 wiring diagrams (SINK / SOURCE mode) in section 3.3.3.

*2 The servo drive provides built-in regenerative resistor.

*3 The brake coil has no polarity.

3.7.3 Torque Control Mode

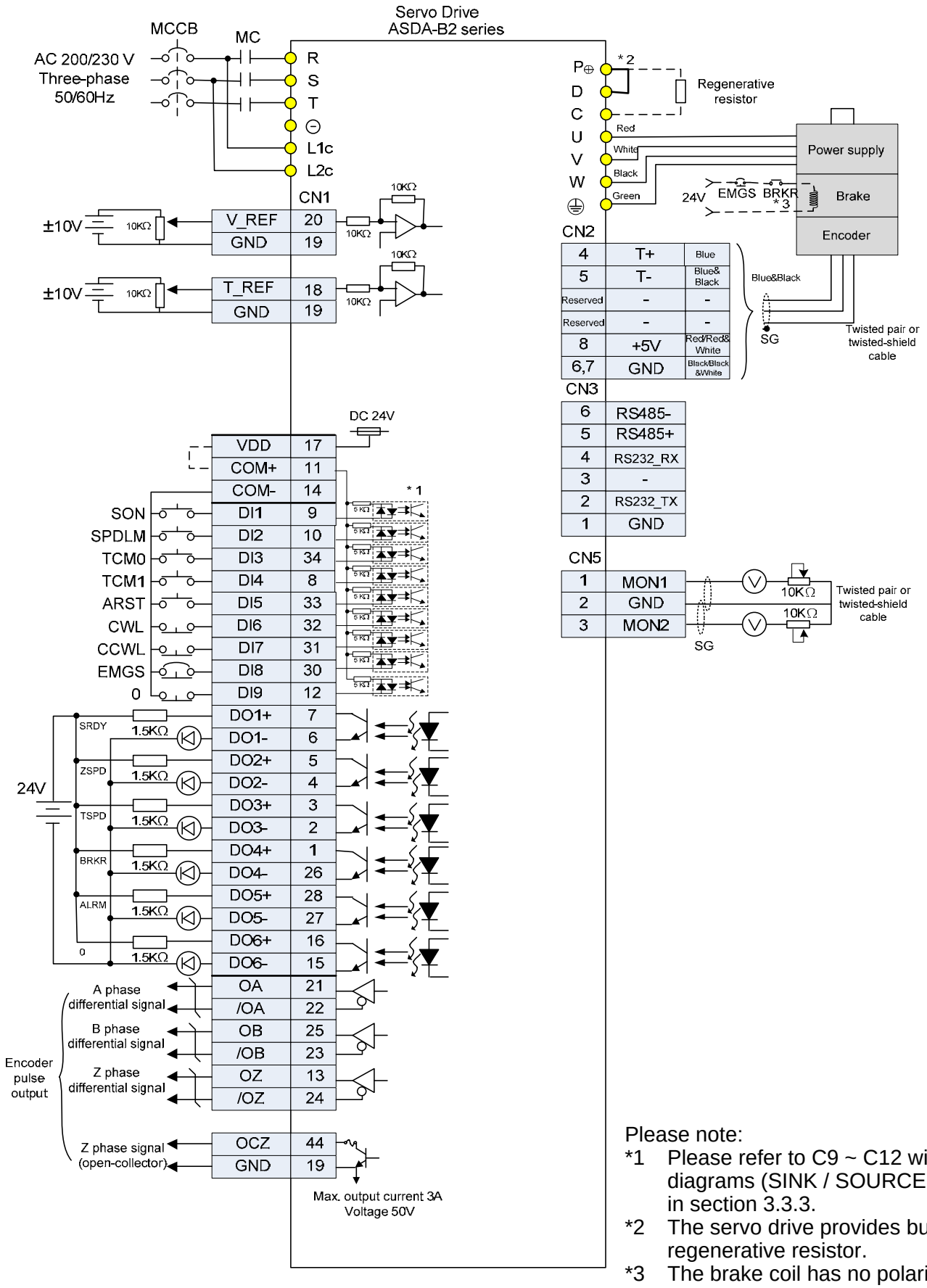

Please note:

*1 Please refer to C9 ~ C12 wiring diagrams (SINK / SOURCE mode) in section 3.3.3.

*2 The servo drive provides built-in regenerative resistor.

*3 The brake coil has no polarity.

Chapter 4 Panel Display and Operation

This chapter details the panel status and operation of ADSA-B2 series servo drive.

4.1 Panel Description

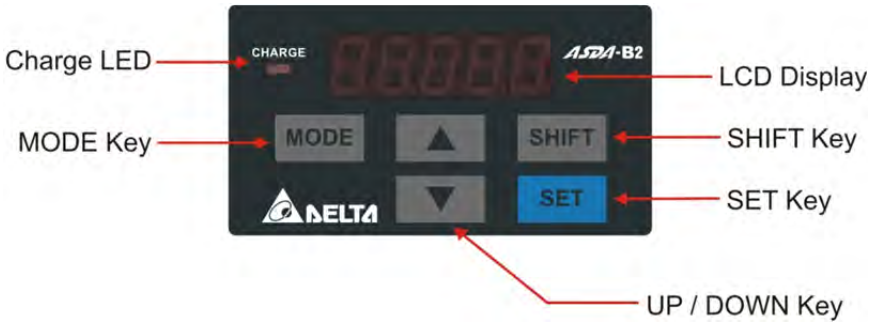

Name	Function
Display	Five-/Seven-segment display is for displaying the monitoring values, parameter values and setting values.
Charge LED	The Charge LED lights to indicate the power is applied to the circuit.
MODE Key	MODE Key. Pressing MODE key can enter or exit different parameter groups, and switch among Monitor mode, Parameter mode and Alarm Mode.
SHIFT Key	SHIFT Key. Pressing SHIFT key can scrolls through parameter groups. After a parameter is selected and its value displayed, pressing SHIFT key can move the cursor to the left and then change parameter settings (blinking digits) by using arrow keys.
UP and DOWN Key	UP and DOWN arrow Key. Pressing the UP and DOWN arrow key can scroll through and change monitor codes, parameter groups and various parameter settings.
SET Key	SET Key. Pressing the SET key can display and save the parameter groups, the various parameter settings. In monitor mode, pressing SET key can switch decimal or hexadecimal display. In parameter mode, pressing SET key can enter into parameter setting mode.

4.2 Parameter Setting Procedure

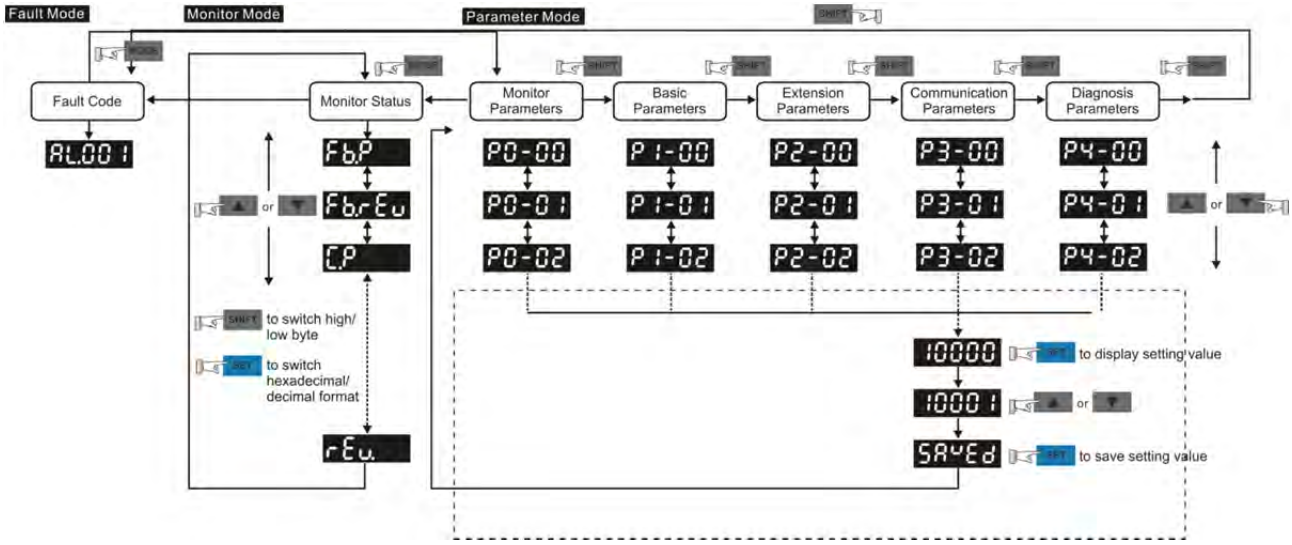

(1) When the servo drive connects to the power, the display will show the monitor variable for about one second, and then enter into the Monitor Mode.

(2) Press the MODE Key can switch mode from Parameter Mode → Monitor Mode → Alarm Mode. If no alarm occurs, then the Alarm Mode will be skipped.

(3) When new alarm occurs, it will switch to Alarm Display Mode in any conditions. Pressing the MODE Key can switch to the other modes. If there is no Key to be selected for 20 seconds, it will return to the Alarm Mode automatically.

(4) In Monitor Mode, press UP or DOWN Key can switch the monitor variable. The monitor variable will be displayed for a second.

(5) In Parameter Mode, pressing the SHIFT Key can switch the group code. The UP/DOWN Key can change parameter code of two bytes.

(6) In Parameter Mode, press the SET Key, the system will immediately enter into Editing Setting Mode. The display will show the corresponded setting value of the parameter. The UP/DOWN Key can be used to change the parameter value or press the MODE Key to skip Editing Setting Mode and return to Parameter Mode.

(7) In Editing Setting Mode, pressing the SHIFT Key can move the blinking bit to the left. And use the UP/DOWN Key to adjust the higher setting byte value.

(8) After adjusting the setting value, press the SET Key. It can save the parameter or execute the command.

(9) After finish parameter setting, the display will show the end code 「SAVED」 and return to the Parameter Mode automatically.

4.3 Status Display

4.3.1 Save Setting Display

When finishing editing parameter, press the SET Key to save the setting. The panel will display the setting status according to the setting for a second.

Display Symbol	Description
SAVEd	The setting value is saved correctly. (Saved)
r-OLY	Read-only parameter. Write-protected. (Read-Only)
LocKd	Enter the wrong password or no password has been entered. (Locked)
Out-r	Incorrect setting value or enter the reserved setting value. (Out of Range)
SrvOn	No entering is allowed when it is Servo ON. (Servo On)
Po-On	Parameter will be effective after the servo drive is re-powered on. (Power On)

4.3.2 Decimal Point

Display Symbol	Description
0.0.0.0.0.0. (Negative Sign, No Function, High Byte, Low Byte)	High byte / low byte indication: When the data is displayed in decimal 32 bits, it is for indicating the current high or low byte. Negative sign: When the data is displayed in decimal format, the two decimal points in the left represents the negative sign, no matter it is showed in 16 or 32 bits. When it is showed in hexadecimal format, it only shows positive sign.

4.3.3 Alarm Message

Display Symbol	Description
AL.nnn	When there is an error of the drive, it will show ‘AL’ as the alarm sign and ‘nnn’ as the alarm code. For further explanation, please refer to Chapter 7, P0-01, parameter description, or Chapter 9, Troubleshooting.

4.3.4 Positive and Negative Sign Setting

Display Symbol	Description
02468	When entering into the Editing Setting Mode, pressing UP / DOWN Key can increase or decrease the displayed content. The SHIFT Key can change the desired adjusted carry value. (The carry value is blinking at the moment.)
24.680	Pressing the SHIFT Key for two seconds can switch the positive (+) and negative (-) sign. If the parameter is over the range after switching the positive or negative sign, then it cannot be switched.

4.3.5 Monitor Display

When the drive is applied to the power, the display will show the monitor displayed symbol for a second, and then enter into the Monitor Mode. In Monitor Mode, the UP / DOWN Key can change the desired monitor variable. Or, the user can directly change parameter P0-02 to set the monitor code. When the power is applied, it will display ASDB2 first. When the value of P0-02 is 4, it will display the pulse number of pulse command.

P0-02 Setting	Monitor Displayed Symbol	Description	Unit
0	Fb.PUU	Motor feedback pulse number (after the scaling of electronic gear ratio) (User unit)	[user unit]
1	C-PUU	Input pulse number of pulse command (after the scaling of electronic gear ratio) (User unit)	[user unit]
2	Er.PUU	The difference of error pulse number between control command pulse and feedback pulse number (User unit)	[user unit]
3	Fb.PLS	Motor feedback pulse number (encoder unit, 1600000 pulse/rev)	[pulse]
4	C-PLS	Input pulse number of pulse command (before the scaling of electronic gear ratio) (encoder unit)	[pulse]
5	Er.PLS	Error pulse number (after the scaling of electronic gear ratio) (encoder unit)	[pulse]
6	CP-Fr	Input frequency of pulse command	[Kpps]
7	SPEEd	Motor speed	[r/min]

P0-02 Setting	Monitor Displayed Symbol	Description	Unit
8	CSPd1	Speed input command	[Volt]
9	CSPd2	Speed input command	[r/min]
10	C-t91	Torque input command	[Volt]
11	C-t92	Torque input command	[%]
12	AvG-L	Average load	[%]
13	PE-L	Peak load	[%]
14	U bvS	Main circuit voltage	[Volt]
15	J-L	Load / Motor Inertia Ratio (Please note that if the display is 130, it indicates that the actual inertia is 13.0)	[0.1times]
16	IGbt.t	IGBT temperature	[^{o}C]
17	rSn.Fr	Resonance frequency (Low byte is the first resonance and high byte is the second one)	[Hz]
18	dIFF.2 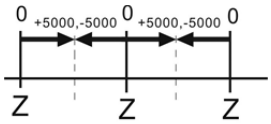	The absolute pulse number of encoder Z phase equals to the homing value, 0. It will be +5000 or -5000 pulse when rotating in forward or reverse direction.	-

The following table lists the display examples of monitor value:

Example of the Displayed Value	Status Description	
01234 (Dec.)	16-bit	If the value is 1234, it displays 01234 (shows in decimal format).
1234 (Hex.)		If the value is 0x1234, it displays 1234 (shows in hexadecimal format; the first digit does not show any).
1234.5 (Dec. High) 67890. (Dec. Low)	32-bit	If the value is 1234567890, the display of the high byte is 1234.5 and displays 67890 as the low byte (shows in decimal format).
h1234 (Hex. High) L5678 (Hex. Low)		If the value is 0x12345678, the display of the high byte is h1234 and displays L5678 as the low byte (shows in hexadecimal format).

1.2.345	Negative display. If the value is -12345, it displays 1.2.345 (only shows in decimal format; there is no positive or negative sign for hexadecimal format display).

NOTE

1) Dec means it is displayed in decimal format. Hex means it is displayed in hexadecimal format.
2) The above display methods can be applied in Monitor Mode and Editing Setting Mode.
3) When all monitor variables is 32 bits, high / low bit and the display (Dec/Hex) can be switched. According to the definition in Chapter 7, each parameter only supports one displaying method and cannot be switched.

4.4 General Function

4.4.1 Operation of Fault Cord Display

When it is in Parameter Mode, select P4-00~P4-04 and press the SET Key, the corresponding fault record will be shown.

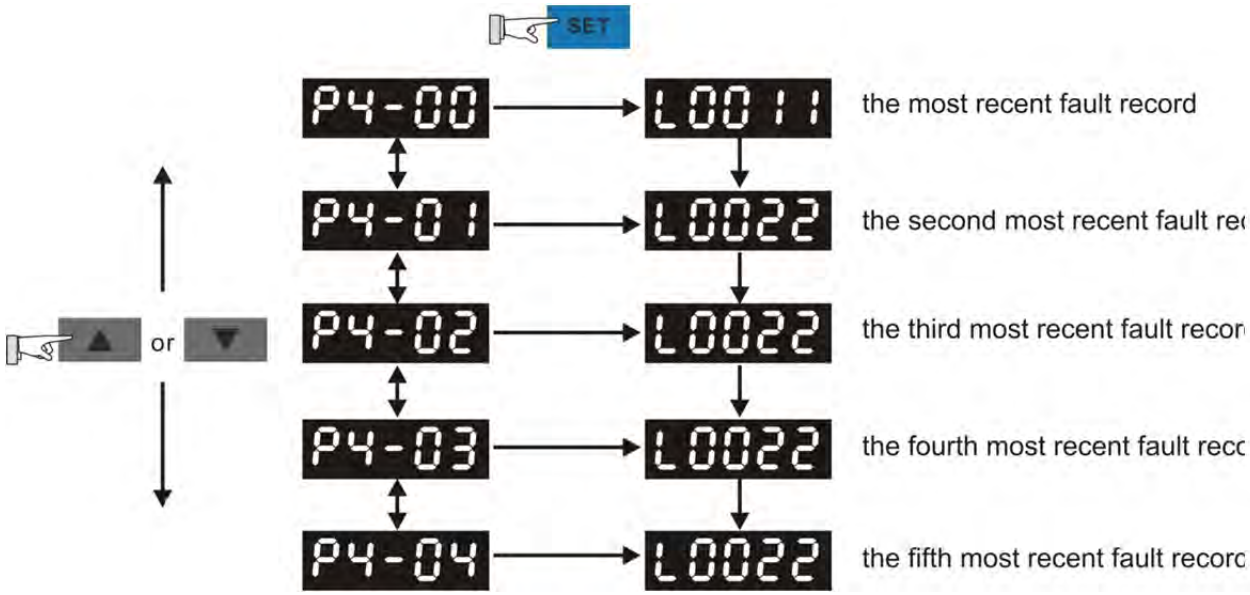

4.4.2 JOG Mode

When it is in Parameter Mode, select P4-05 and follow the setting method below for JOG operation.

(1) Press the SET Key to display the speed value of JOG. The default value is 20r/min.

(2) Press UP or DOWN Key to adjust the desired speed value of JOG. It is adjusted to 100r/min in the example.

(3) Press the SET Key to display JOG and enter JOG mode.

(4) When it is in JOG Mode, press UP or DOWN Key to enable the servo motor in forward or reverse direction. The servo motor stops running as soon as the user stops pressing the key. JOG operation is working only when it is Servo ON.

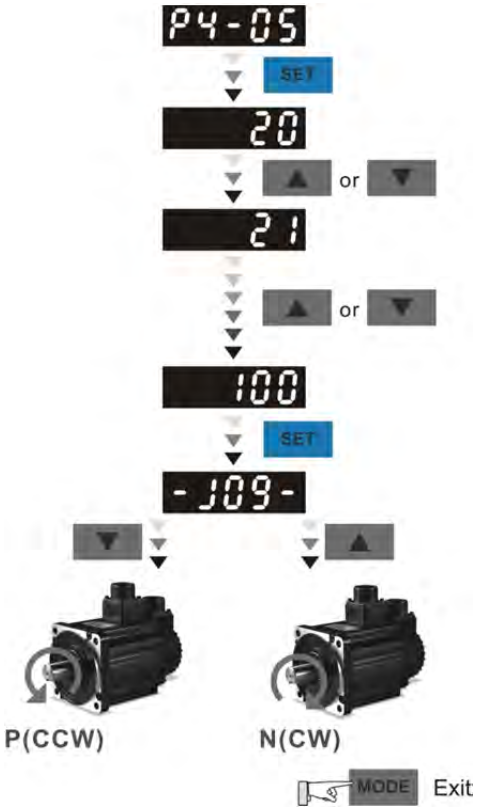

4.4.3 Force DO Output

Enter into the Output Diagnosis Mode by the following settings. Set P2-08 to 406 and enable the function of force DO output. Then, set the force DO output by binary method via P4-06. When the setting value is 2, DO2 will be forced to enable. When the setting value is 5, DO1 and DO3 will be forced to enable. No data is retained in this mode. It returns to the normal DO mode when re-power on the drive or set P2-08 to 400.

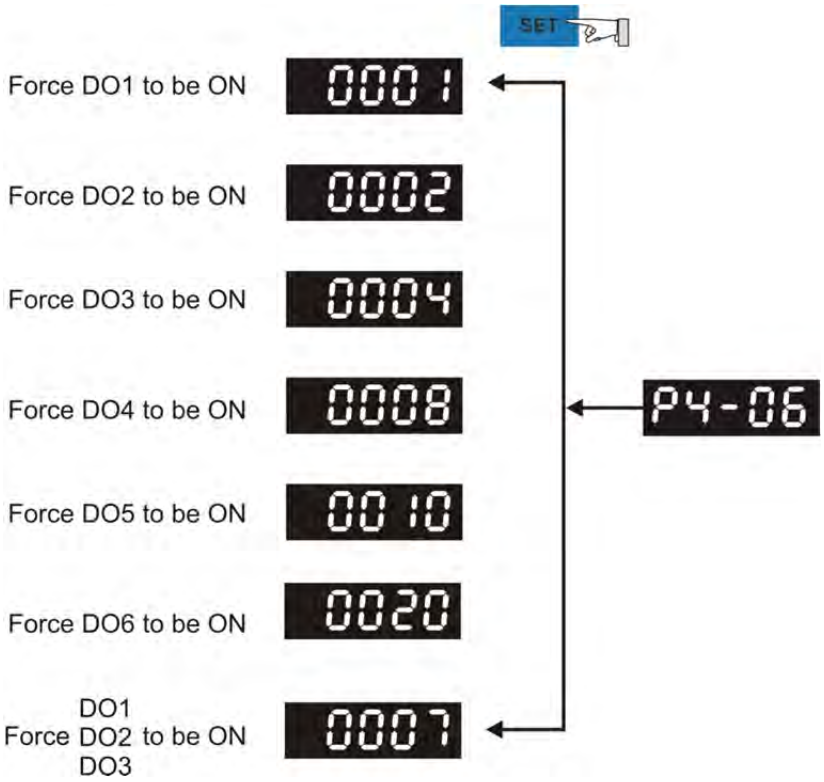

NOTE

P4-06 is displayed in hexadecimal format. Therefore, it will not show the fifth 0.

4.4.4 Digital Input Diagnosis Operation

Enter into the Digital Input Diagnosis Mode by the following setting methods. When the external output signal DI1~DI9 is ON, the corresponding signal will be shown on the panel. It is displayed by bit. When it shows bit, it means it is ON.

For example, if it shows **1E1**, **E** is in hexadecimal format, it will be **1100** when it transfers to binary format. Then, DI6~DI8 is ON.

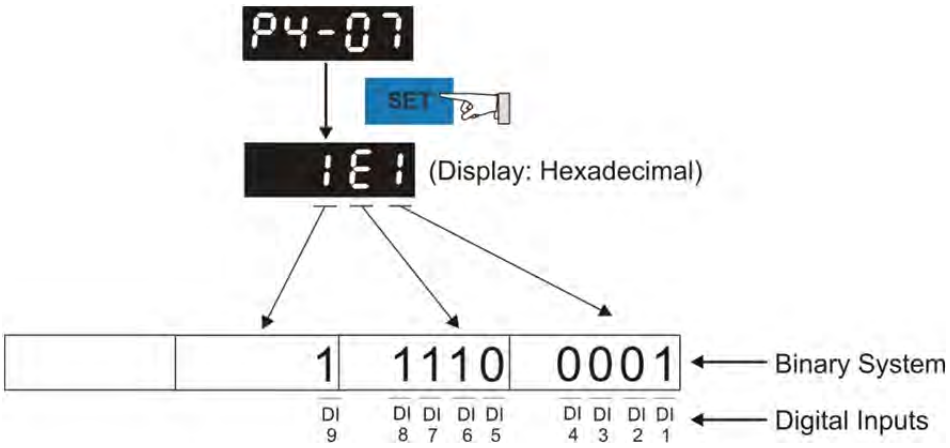

(Hexadecimal Display)

4.4.5 Digital Output Diagnosis Operation

Enter into the Digital Output Diagnosis Mode by the following setting methods. The output signal DO1~DO6 is ON and the corresponding signal will be shown on the panel. It is displayed by bit. When it shows bit, it means it is ON.

For example, if it shows **3F**, **F** is in hexadecimal format, it will be **1111** when it transfers to binary format. Then, DO1~DO4 is ON.

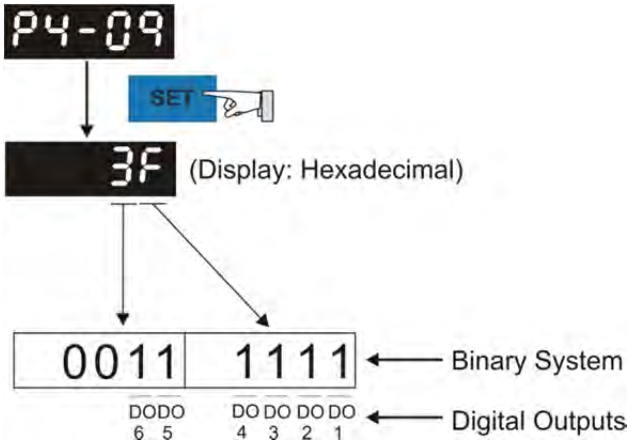

(Display in hexadecimal format)

(This page is intentionally left blank.)

Chapter 5 Trial Operation and Tuning

This chapter is divided into two parts to describe the trial operation. The first one is the inspection without load and another one is the inspection with load. For safety reasons, please conduct the first inspection.

5.1 Inspection without Load

Please remove the load of the servo motor, including coupling on the shaft and accessories so as to avoid any damage on servo drive or mechanism. This is aiming to avoid the falling off of the disassembled parts of the motor shaft and indirectly causing the personnel injury or equipment damage during operation. Running the motor without load, if the servo motor can run during normal operation, then it can connect to load for operation.

Caution: Please operate the servo motor without load first. If the servo motor runs normally, connect the load afterwards in order to avoid any danger.

Please check the following items before operation.

Inspection before operation (has not applied to the power yet)	■ Check if there is any obvious damage shown on its appearance. ■ The splicing parts of the wiring terminal should be isolated. ■ Make sure the wiring is correct so as to avoid the damage or any abnormity. ■ Check if the electric conductivity objects including sheet metal (such as screws) or inflammable objects are not inside the servo drive. ■ Check if the control switch is in OFF status. ■ Do not place the servo drive or external regenerative resistor on inflammable objects. ■ To avoid the electromagnetic brake losing efficacy, please check if stop function and circuit break function can work normally. ■ If the peripheral devices are interfered by the electronic instruments, please reduce electromagnetic interference with devices. ■ Please make sure the external voltage level of the servo drive is correct.
Inspection before running the servo drive	■ The encoder cable should avoid excessive stress. When the motor is running, make sure the cable is not frayed or over extended. ■ Please contact with Delta if there is any vibration of the servo

(has already applied to the power)	motor or unusual noise during the operation. ■ Make sure the setting of the parameters is correct. Different machinery has different characteristic, please adjust the parameter according to the characteristic of each machinery. ■ Please reset the parameter when the servo drive is in SERVO OFF status, or it may cause malfunction. ■ When the relay is operating, make sure it can work properly. ■ Check if the power indicator and LED display works normally. ■ PWM is used to control 7.5 kW. Thus, when the temperature is lower than 40℃, the fan does not work.

5.2 Applying Power to the Servo Drive

Please follow the instructions below.

A. Make sure the wiring between the motor and servo drive is correct.

U, V, W and FG have to connect to cable red, white, black and green respectively. If the wiring is incorrect, the motor cannot work normally. The ground wire FG of the motor must be connected to the ground terminal of the servo drive. Please refer to Chapter 3.1 for wiring.

The encoder cable of the motor has correctly connected to CN2: If users only desire to execute JOG function, it is unnecessary to connect CN1 and CN3 (Please refer to Chapter 5.3). Refer to Chapter 3.1 and 3.4 for the wiring of CN2.

Caution: Do not connect the power terminal (R, S, T) to the output terminal (U, V, W) of the servo drive. Or it might damage the servo drive.

B. Power circuit of the servo drive

Apply power to the servo drive. Please refer to Chapter 3.1.3 for power wiring.

C. Power On

Power of the servo drive: including control circuit (L1c, L2c) and main circuit (R, S, T) power. When the power is on, the display of the servo drive will be:

The digital input (DI6~DI8) of the default value is the signal of reverse limit error (NL), forward limit error (PL) and emergency stop (EMGS), if not using the default setting of DI6~DI8, adjusting the setting of P2-15~P2-17 is a must. Parameters could be set to 0 (disable this DI function) or modified to another function.

From the last setting, the servo drive status displays parameter P0-02 setting as the motor speed (06), then the screen display will be:

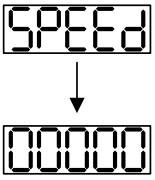

If the screen displays no text, please check if the voltage of the control circuit terminal (L1c and L2c) is over low.

1) When the screen displays:

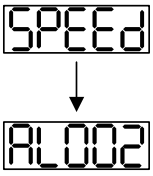

Warning of overvoltage:

It means the voltage input by the main circuit is higher than the rated voltage or power input error (incorrect power system).

Corrective actions:

- Use the voltmeter to measure if the input voltage from the main circuit is within the range of rated voltage value.
- Use the voltmeter to measure if the power system complies with the specification.

2) When the screen displays:

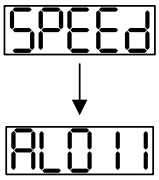

Warning of encoder error:

Check if the motor encoder is securely connected or the wiring is correct.

Corrective actions:

- Check if the wiring is the same as the instruction of the user manual.
- Check the encoder connector.
- Check if the wiring is loose.
- Encoder is damaged.

3) When the screen displays:

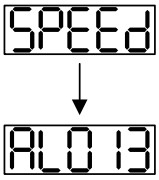

Warning of emergency stop:
Please check if any of the digital input DI1~DI9 is set to emergency stop (EMGS).

Corrective actions:

- If not desire to set emergency stop (EMGS) as one of the digital input, make sure no digital input is set to emergency stop (EMGS) among DI1~DI9. (That is to say none of the parameters, P2-10~P2-17 and P2-36 is set to 21.)
- If the function of emergency stop (EMGS) is needed and this DI is set as normally close (function code: 0x0021), please make sure this DI is always normally close. If not, please set this DI as normally open (function code: 0x0121).

4) When the screen displays:

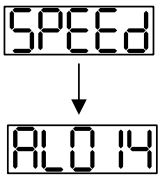

Warning of negative limit error:
Please check if any of the digital input DI1~DI9 is set to negative limit (NL) and that DI is ON.

Corrective actions:

- If not desire to set negative limit (NL) as one of the digital input, make sure no digital input is set to negative limit (NL) among DI1~DI9. (That is to say none of the parameters, P2-10~P2-17 and P2-36 is set to 22.)
- If the function of negative limit (NL) is needed and this DI is set as normally close (function code: 0x0022), please make sure this DI is always normally close. If not, please set this DI as normally open (function code: 0x0122).

5) When the screen displays:

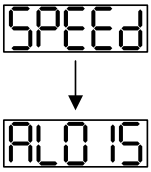

Warning of positive limit error:

Please check if any of the digital input DI1~DI9 is set positive limit (PL) and that DI is ON.

Corrective actions:

- If not desire to set positive limit (PL) as one of the digital input, make sure no digital input is set to positive limit (PL) among DI1~DI9. (That is to say none of the parameters, P2-10~P2-17 and P2-36 is set to 23.)
- If the function of positive limit (PL) is needed and this DI is set as normally close (function code: 0x0023), please make sure this DI is always normally close. If not, please set this DI as normally open (function code: 0x0123).

6) When the screen displays:

Warning of over current:
Corrective actions:

- Check the connection between the motor and servo drive.
- Check if the conducting wire is short circuited.

Exclude short circuit and avoid metal conductors being exposed.

7) When the screen displays:

Warning of under voltage:
Corrective actions:

- Check if the wiring of main circuit input voltage is correct.
- Use voltmeter to measure if the main circuit voltage is normal.
- Use voltmeter to measure if the power system complies with the specification.

Note: During the process of power on or servo on, if an alarm occurs or shows any abnormal display, please contact the distributors.

5.3 JOG Trial Run without Load

It is very convenient to test the motor and servo drive with the method of JOG trial run without load since the extra wiring is unnecessary. For safety reasons, it is recommended to set JOG at low speed. Please see the following descriptions.

STEP 1: Use software setting to Servo ON. Set parameter P2-30 to 1. This setting is to force the servo ON through software.

STEP 2: Set P4-05 as JOG speed (Unit: [r/min]). After setting the desired JOG speed, press the **SET** Key, the servo drive will enter JOG mode.

STEP 3: Press the **MODE** Key to exist JOG mode.

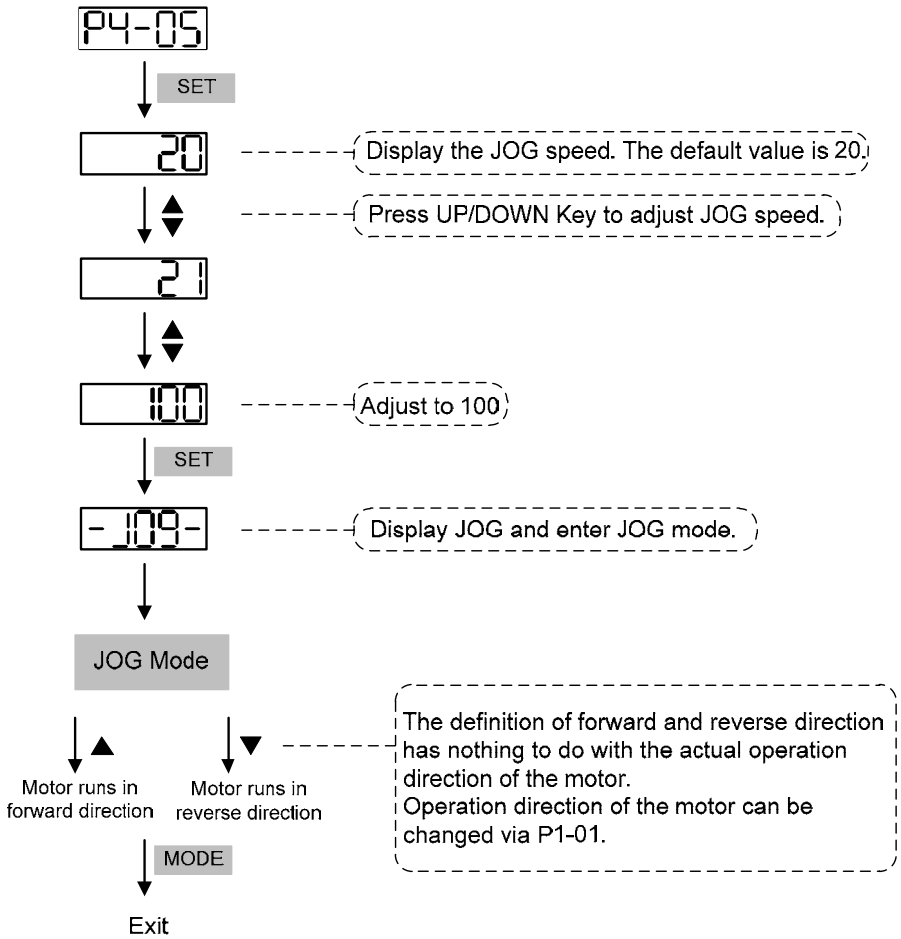

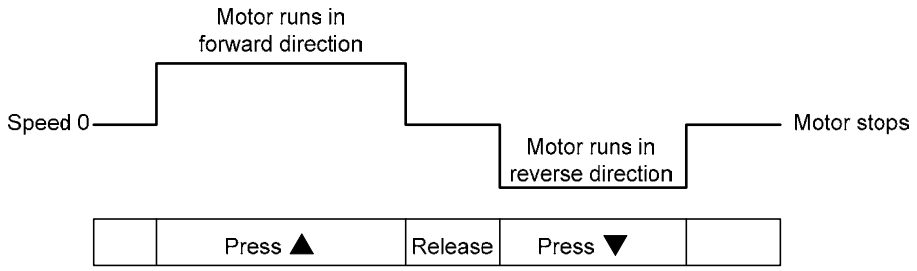

If the motor does not run, please check if the wiring between UVW and encoder cable is correct.
If the motor run abnormally, please check if the UVW phase sequence is correct.

5.4 Trial Run without Load (Speed Mode)

Before the trial run without load, firmly secure the motor base so as to avoid the danger cause by the reaction of motor operation.

STEP 1:

Set the control mode of the servo drive to speed mode. Set P1-01 to 2. Then, re-power on the servo drive.

STEP 2:

In speed control mode, the digital input settings of trial run are as follows:

Digital Input	Parameter Setting Value	Symbol	Function Description	CN1 PIN No.
DI1	P2-10=101	SON	Servo On	DI1-=9
DI2	P2-11=109	TRQLM	Torque limit	DI2-=10
DI3	P2-12=114	SPD0	Speed command selection	DI3-=34
DI4	P2-13=115	SPD1	Speed command selection	DI4-=8
DI5	P2-14=102	ARST	Alarm reset	DI5-=33
DI6	P2-15=0	Disabled	Invalid DI function	-
DI7	P2-16=0	Disabled	Invalid DI function	-
DI8	P2-17=0	Disabled	Invalid DI function	-
DI9	P2-36=0	Disabled	Invalid DI function	-

The above table disables the function of negative limit (DI6), positive limit (DI7) and emergency stop (DI8). Thus, the value of parameter P2-15 ~ P2-17 and P2-36 is set to 0 (Disabled). The digital input of Delta′ s servo drive can be programmed by users. When programming digital input, please refer to the description of DI code.

The default setting includes the function of negative limit, positive limit and emergency stop, therefore, after the setting is completed, if there is any alarm occurs, please re-power on the servo drive or switch ON DI5 to clear the alarm. Please refer to Chapter 5.2.

The speed command selection is determined by SPD0 and SPD1. See the table below.

Speed Command No.	DI signal of CN1		Command Source	Content	Range
	SPD1	SPD0			
S1	0	0	External analog command	Voltage between V-REF and GND	-10V ~ +10V
S2	0	1	Register parameter	P1-09	-50000 ~ 50000
S3	1	0		P1-10	-50000 ~ 50000
S4	1	1		P1-11	-50000 ~ 50000

0: means DI is OFF; 1: means DI is ON

Register parameter

The parameter setting range is from -50000 to 50000.

Setting speed = Setting value x unit (0.1 r/min).

For example: P1-09 = +30000; Setting speed = +30000 x 0.1r/min = +3000r/min

Command setting of speed register

P1-09 is set to 30000

P1-10 is set to 1000

P1-11 is set to -30000

Input command	Rotation direction
+	CW
-	CCW

STEP 3:

(1) Users switch ON DI1 and Servo ON.

(2) Both DI3 (SPD0) and DI4 (SPD1), the speed command, are OFF, which means it currently executes S1 command. The motor rotates according to analog voltage command.

(3) When DI3 (SPD0) is ON, it means it currently executes S2 command (3000r/min). The speed is 3000r/min at the moment.

(4) When DI4 (SPD1) is ON, it means it currently executes S3 command (100r/min). The speed is 100r/min.

(5) When both DI3 (SPD0) and DI4 (SPD1) are ON, it means S4 command (-3000r/min) is executed at the moment. The speed is -3000r/min.

(6) Step (3), (4) and (5) can be repeatedly executed.

(7) If users desire to stop the motor, switch OFF DI1 (Servo OFF).

5.5 Tuning Procedure

Estimate the ratio of Load Inertia to Servo Motor Inertia: JOG Mode

Tuning Procedure	Display
1. After completing wiring, when applying to the power, the servo drive will display:	AL013
2. Press the **MODE** Key to select the mode of parameter function.	P0-00
3. Press the **SHIFT** Key twice to select the mode of parameter group.	P2-00
4. Press the **UP** Key to select parameter P2-17.	P2-17
5. Press the **SET** Key to display parameter value, which is shown as the content on the right.	21
6. Press the **SHIFT** Key twice, then press the **UP** Key and then press the **SET** Key.	121
7. Press the **UP** Key to select parameter P2-30.	P2-30
8. Press the **SET** Key to display the parameter value.	0
9. Press the **UP** Key and select the parameter value 1.	1
10. Then, the servo drive is ON and will show:	0
11. Press the **MODE** Key and then press the **DOWN** Key for three times to select the value of inertia ratio.	JL
12. The panel displays the current value of inertia ratio (default value).	1.0
13. Press the **MODE** Key to select the mode of parameter function.	P2-30
14. Press the **SHIFT** Key twice to select the mode of parameter group.	P4-00
15. Press the **UP** Key twice to select parameter P4-05.	P4-05
16. Press the **SET** Key to show the content, which is 20r/min at JOG speed. Press the **UP** or **DOWN** Key to increase or decrease the JOG speed. Press the **SHIFT** Key to move to the next digit of the left.	20 ↓ 200
17. Set the desired JOG speed and press the **SET** Key which is shown as the figure on the right.	-JOG-
18. Press the **UP** Key to rotate the motor in forward direction while press the **DOWN** Key the motor will rotate in reverse direction.	
19. Execute JOG operation at low speed first. With the constant speed, if the motor operates smoothly in forward and reverse direction, users can execute JOG operation at higher speed.	

Tuning Procedure	Display
20. In P4-05, the servo drive cannot display inertia ratio. Please press the **MODE** Key twice to view the value of inertia ratio. If users desire to execute JOG operation again, press the **MODE** Key, and then press the **SET** Key twice. Observe the panel display to see if the load inertia ratio remains at the same value after acceleration and deceleration.	

5.5.1 Flowchart of Tuning Procedure

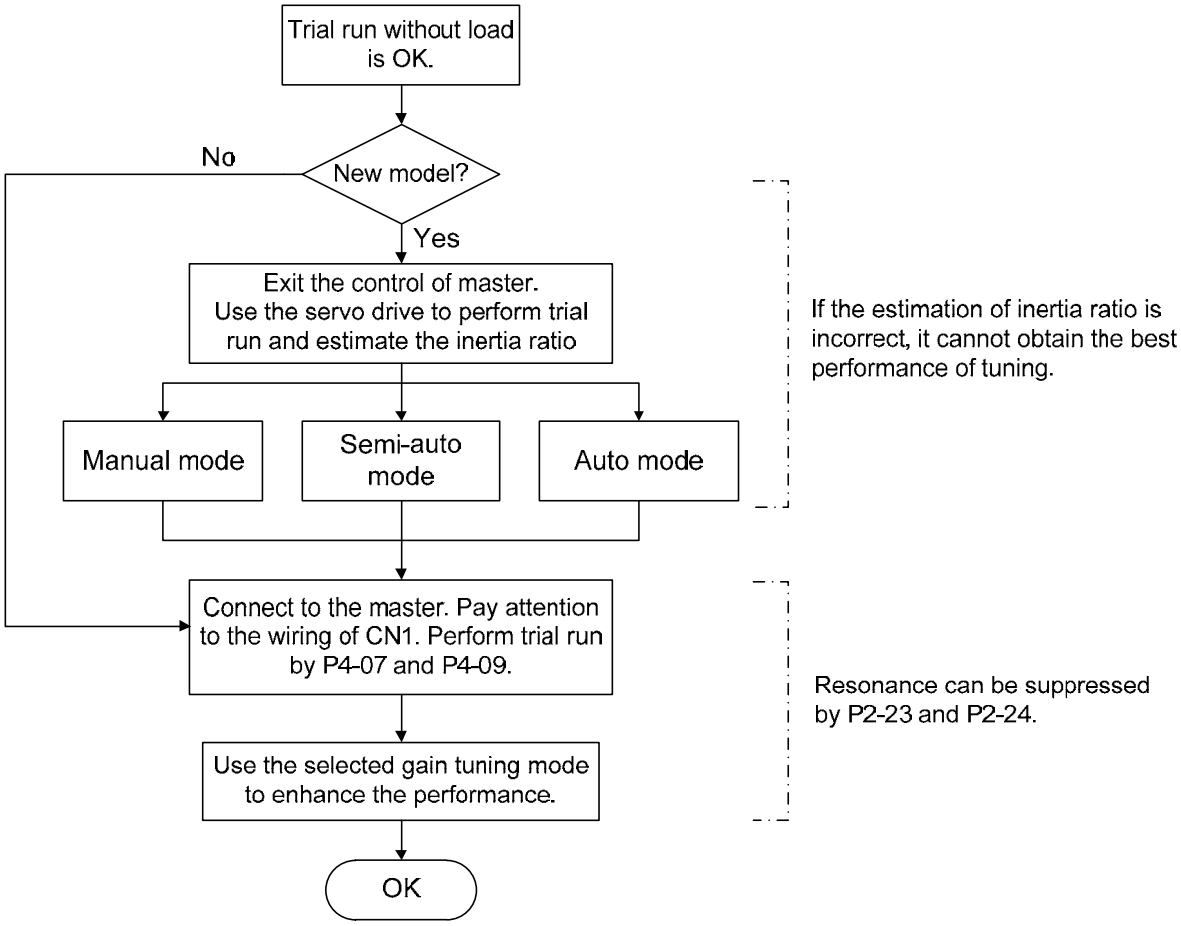

5.5.2 Inertia Estimation Flowchart (with Mechanism)

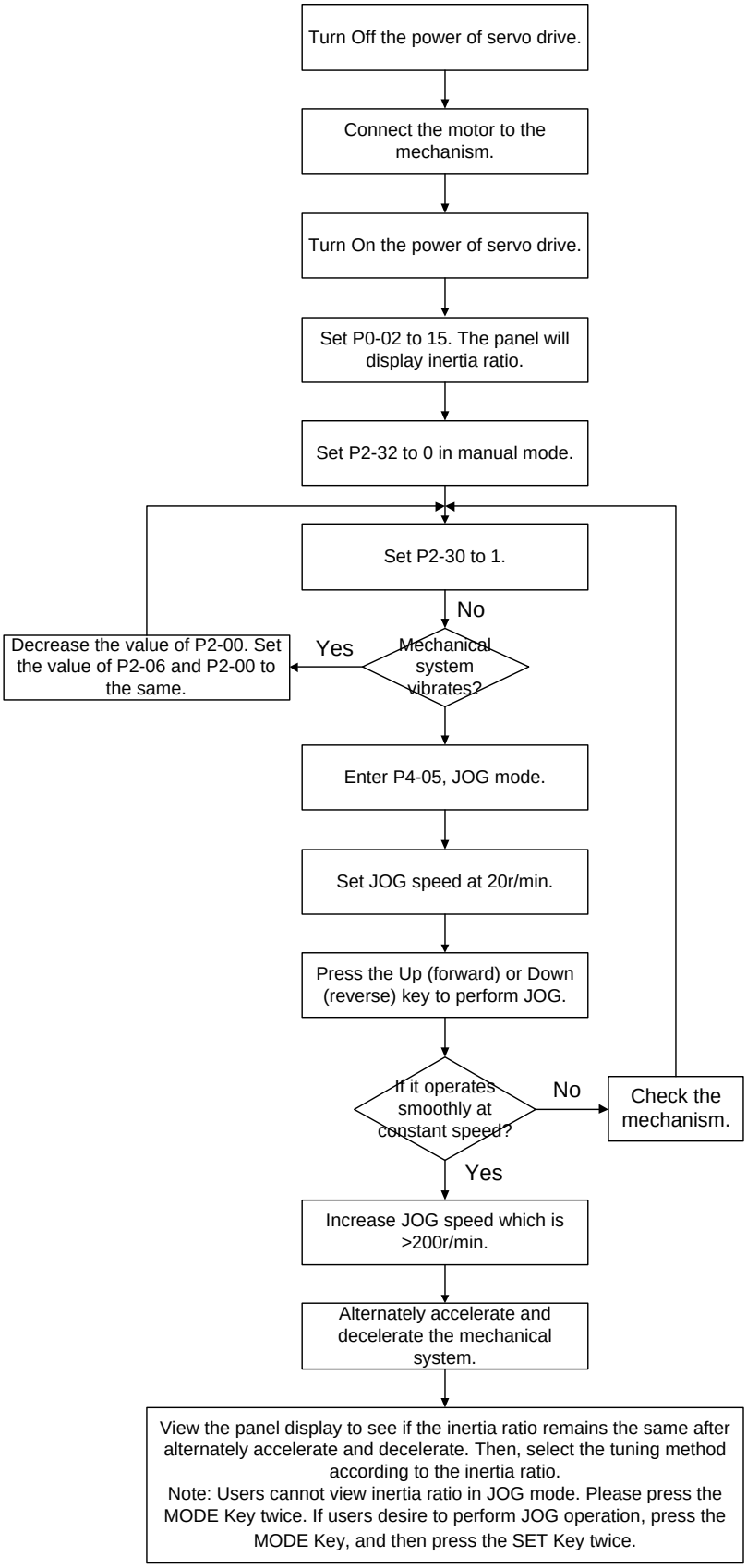

5.5.3 Flowchart of Auto Tuning

Set P2-32 to 1 (auto mode, continuous tuning)

Continue to estimate the system inertia. Automatically save the value in P1-37 every 30 minutes and refer the stiffness and bandwidth setting of P2-31.

P2-31Stiffness setting in auto tuning mode (The default value is 80)

In auto and semi-auto mode, the bandwidth setting of speed circuit is:

1~50Hz: low-stiffness, low-response

51~250Hz: medium-stiffness, medium-response

251~850Hz: high-stiffness, high-response

Stiffness setting in auto tuning mode: the bigger the value is, the stronger the stiffness will be.

Adjust the value of P2-31: Increase the value of P2-31 to increase stiffness or decrease to reduce the noise. Continue to tune until the performance is satisfied. Then, tuning is completed.

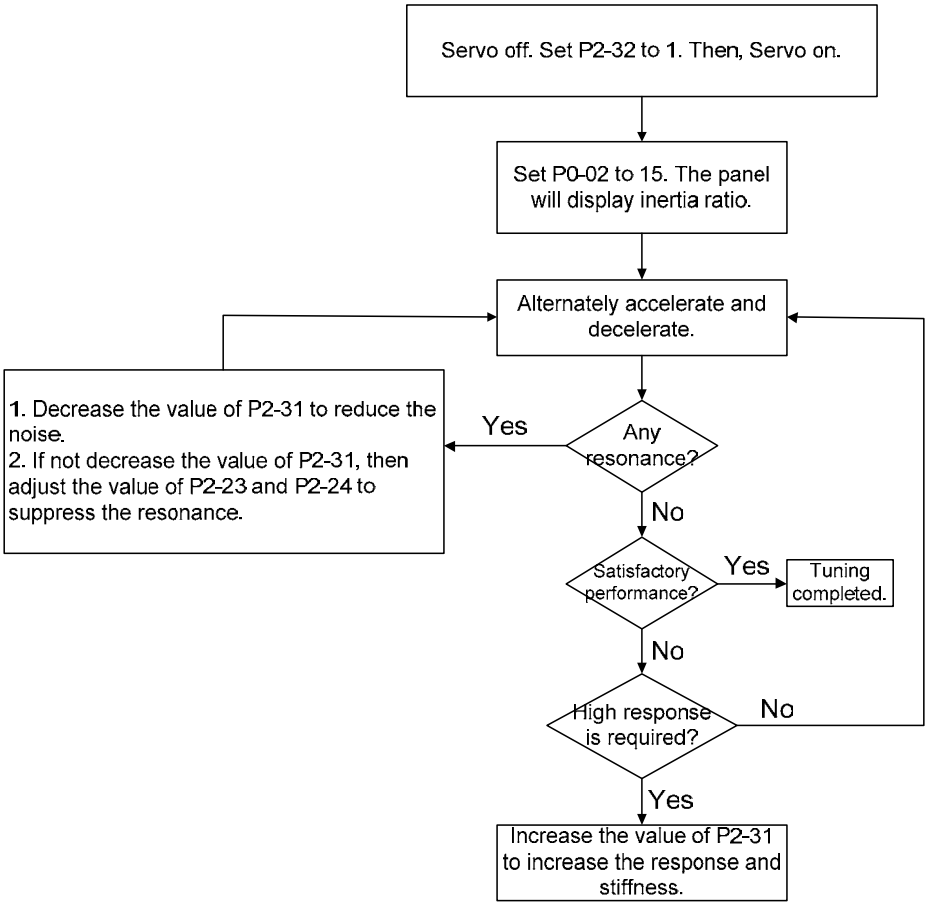

5.5.4 Flowchart of Semi-Auto Tuning

Set P2-32 to 2 (semi-auto mode, non-continuous tuning)

After tuning for a while and wait until the system inertia is stable, it stops estimating. The estimated inertia ratio will be saved to P1-37. When switching mode from manual or auto to semi auto, the system starts tuning again. During the process of estimation, the system will refer the stiffness and bandwidth setting of P2-31.

P2-31Response setting in auto mode (The default value is 80)

In auto and semi-auto mode, the bandwidth setting of speed circuit is:

1~50Hz: low-stiffness, low-response

51~250Hz: medium-stiffness, medium-response

251~850Hz: high-stiffness, high-response

Response setting in semi-auto tuning mode: the bigger the value is, the better the response will be.

Adjust the value of P2-31: Increase the value of P2-31 to increase the response or decrease to reduce the noise. Continue to tune until the performance is satisfied. Then, tuning is completed.

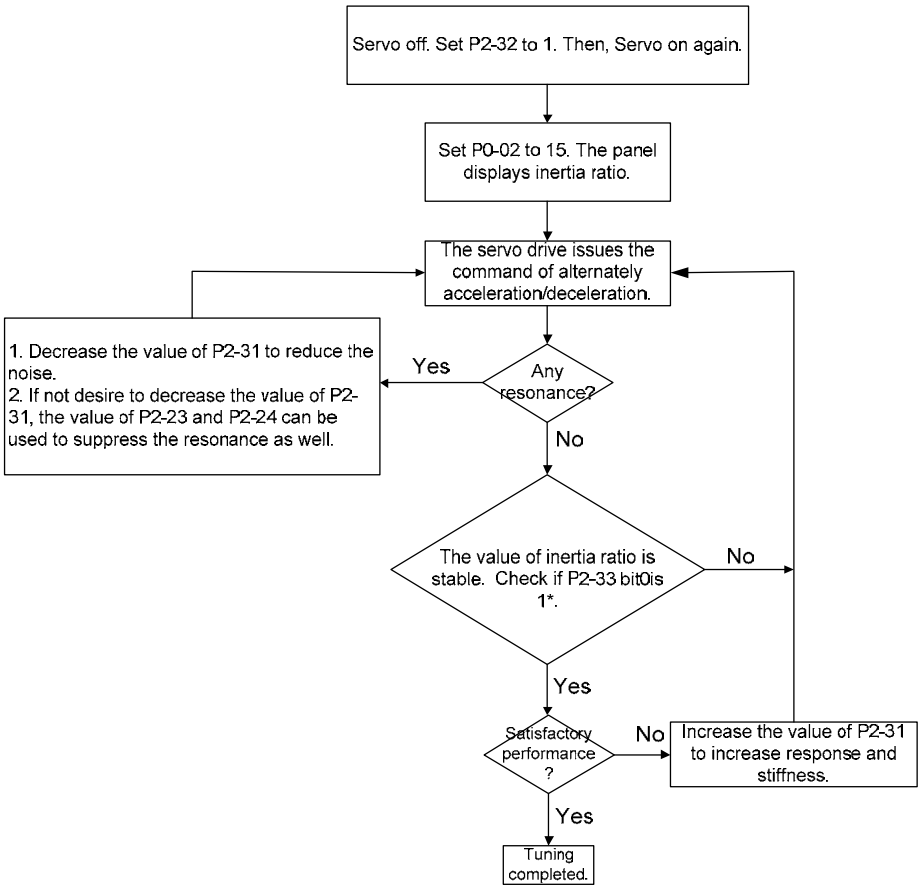

NOTE

1) When bit0 of P2-33 is set to 1, it means the inertia estimation in semi-auto mode is completed. The result can be accessed by P1-37.

2) If the value of P2-33 bit 0 is cleared to 0, the system will start to estimate again.

5.5.5 Limit of Inertia Ratio

Acceleration / Deceleration time of reaching 2000r/min should be less than 1 second.

The speed in forward and reverse direction should be higher than 200r/min.

The load inertia should be under 100 times of motor inertia.

The change of external force of inertia ratio cannot be too severe.

In auto mode, the inertia value will be saved to P1-37 every 30 minutes; while in semi-auto mode, the inertia value will be saved to P1-37 only until the system inertia is stable and stops the estimation of load inertia.

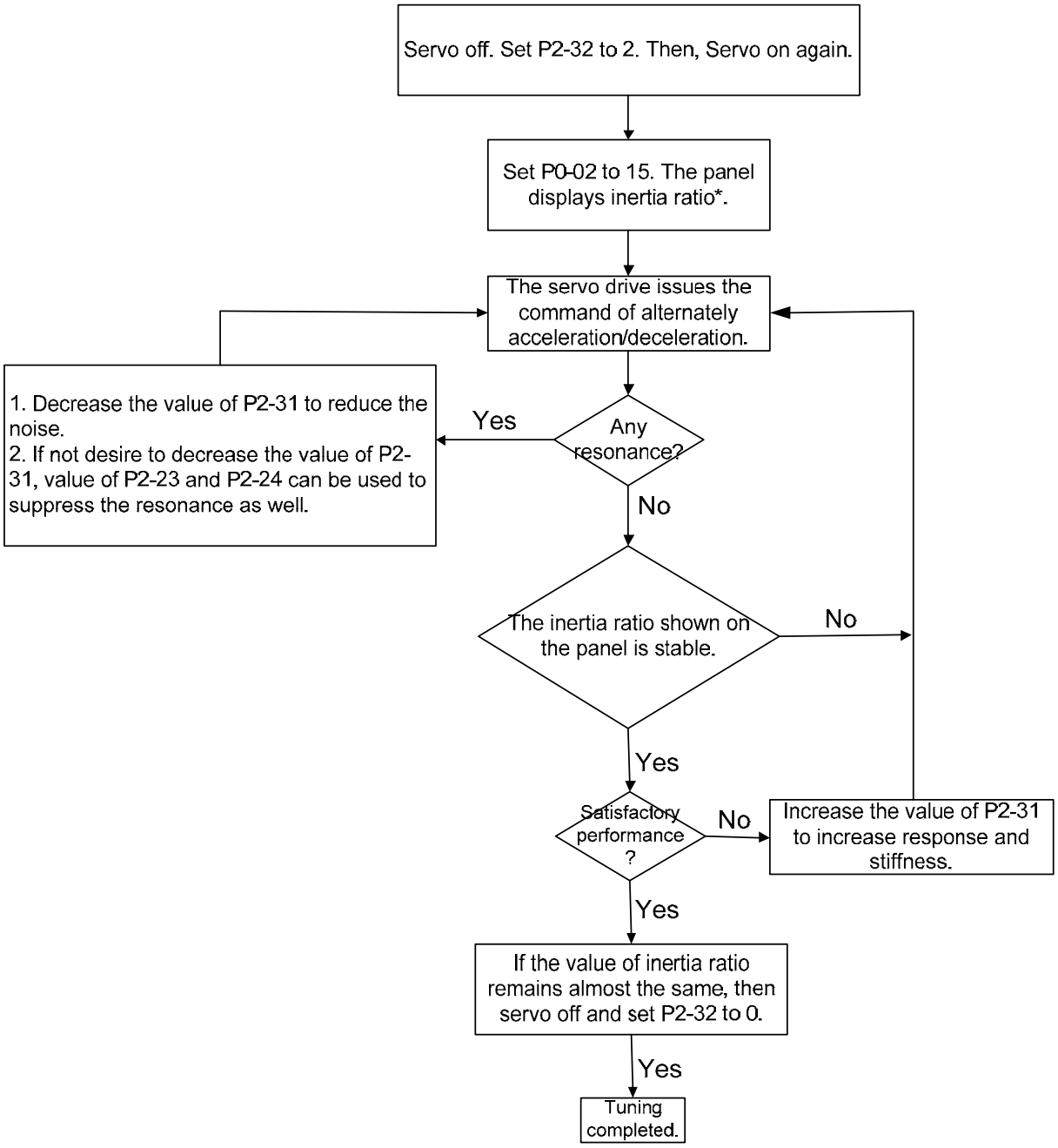

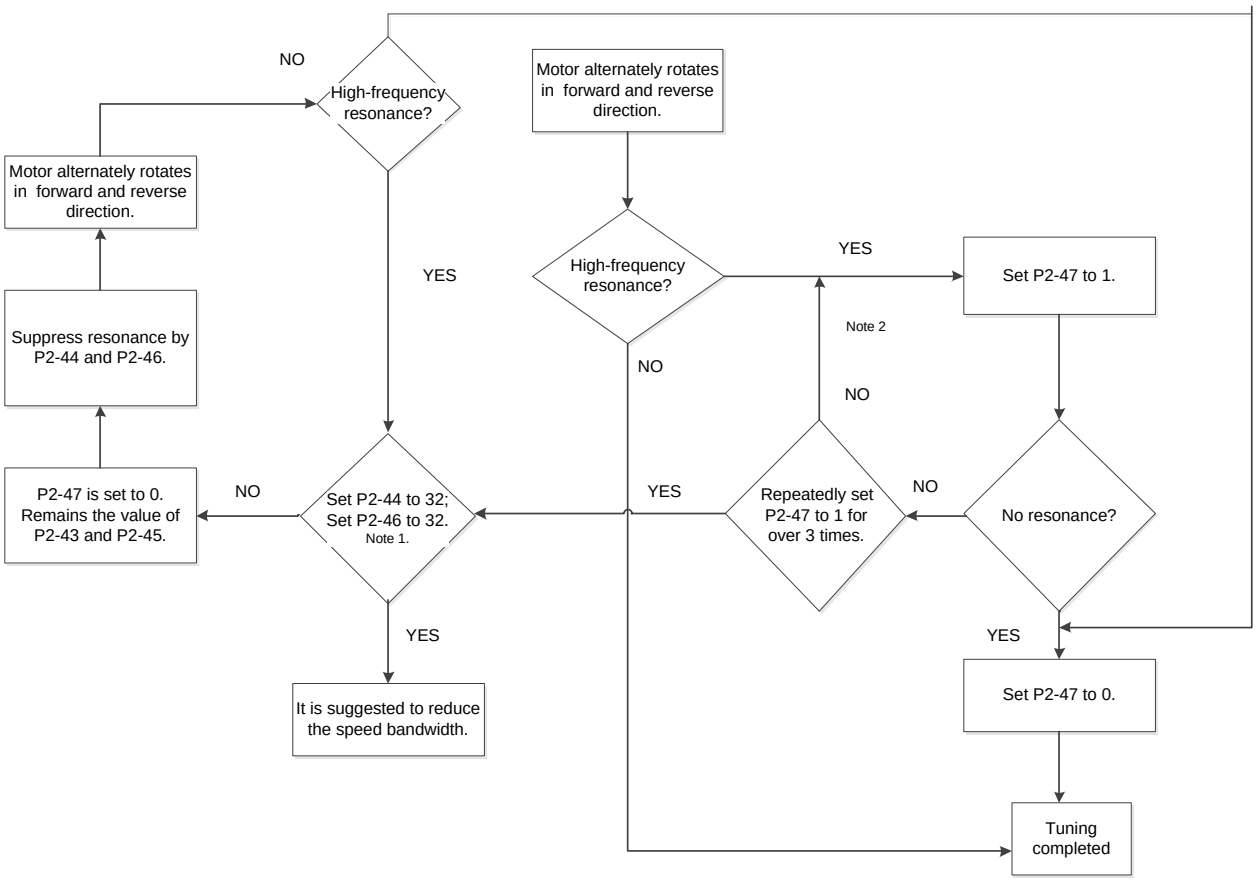

NOTE

1) Parameter P2-44 and P2-46 are the setting value of resonance suppression. If the value has been set to the maximum (32dB), and still cannot suppress the resonance, please reduce the speed bandwidth. After setting P2-47, users can check the value of P2-44 and P2-46. If the value of P2-44 is not 0, it means the resonance frequency exists in the system. Then, users can access P2-43 to see the resonance frequency (Hz). When there is another resonance frequency, the information will be shown in P2-43 and P2-44 as well as P2-45 and p2-46.

2) If resonance still exists, repeatedly set P2-47 to 1 for 3 times and manually adjust the setting of resonance.

5.5.6 Mechanical Resonance Suppression Method

Three groups of Notch filter are provided to suppress mechanical resonance. Two of them can be set to the auto resonance suppression and manual adjustment.

The procedure of manually suppress the resonance is as the followings:

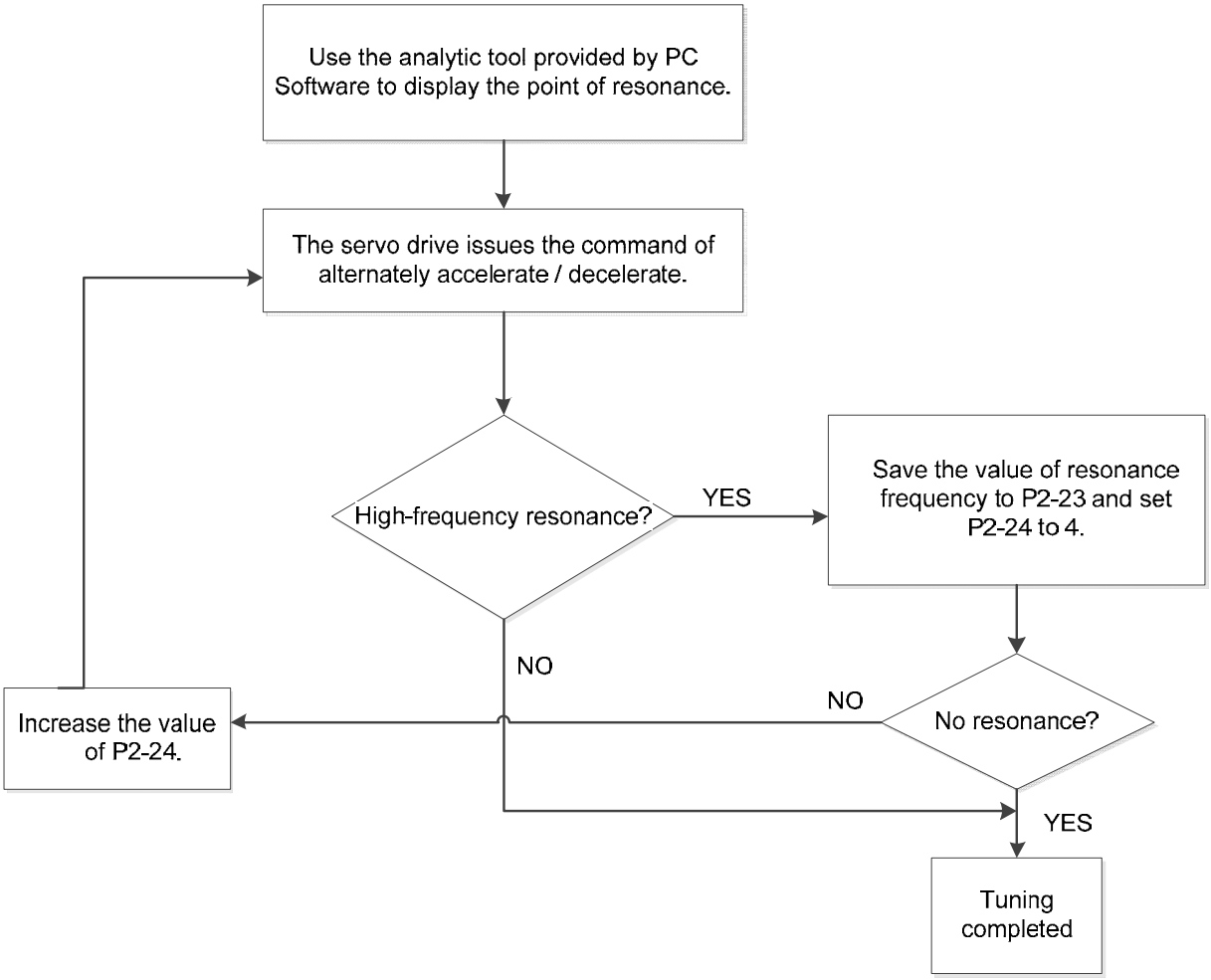

5.5.7 Tuning Modes and Parameters

Tuning Mode	P2-32	Auto-Set Parameter	User-defined Parameter	Inertia Adjustment
Manual Mode	0 (Default setting)	N/A	P1-37 (Inertia ratio of the motor) P2-00 (Position control gain) P2-04 (Speed control gain) P2-06 (Speed integral compensation) P2-25 (Low-pass filter of resonance suppression) P2-26 (Anti-interference gain)	The value remains
Auto Mode (Continuous estimation)	1	P1-37 P2-00 P2-02 P2-04 P2-06 P2-25 P2-26 P2-49	P2-31 Frequency response of speed loop setting in auto mode (response level)	Continuous tuning (update the inertia every 30 minutes)
Semi-Auto Mode (Non-continuous estimation)	2	P1-37 P2-00 P2-02 P2-04 P2-06 P2-25 P2-26 P2-49	P2-31 Frequency response of speed loop setting in semi-auto mode (response level)	Non-continuous tuning (stop updating the inertia after operating for a while)

When switching mode from auto mode 1 to manual mode 0, the value of P1-37, P2-00, P2-04, P2-06, P2-25, P2-26 and P2-49 will be modified to the one in auto mode.

When switching mode from semi-auto mode 2 to manual mode 0, the value of P1-37, P2-00, P2-04, P2-06, P2-25, P2-26 and P2-49 will be modified to the one in semi-auto mode.

5.5.8 Tuning in Manual Mode

The selection of position / speed response frequency should be determined by the machinary stiffness and application. General speaking, the high-frequency machinary or the one requries precise processing needs the higher response frequency. However, it might easily cause the resonance. And the stronger stiffness machinary is needed to avoid the resonance. When using the unknown resonse frequency machinary, users could gradually increase the gain setting value to increase the resonse frequency. Then, decrease the gain setting value until the resonance exists. The followings are the related descriptions of gain adjustment.:

- Position control gain (KPP, parameter P2-00)

  This parameter determines the response of position loop. The bigger KPP value will cause the higher response frequency of position loop. And it will cause better following error, smaller position error, and shorter settling time. However, if the value is set too big, the machinery will vibrate or overshoot when positioning. The calculation of position loop frequency response is as the following:

  $$\text{Position Loop Frequency Response (Hz)} = \frac{KPP}{2\pi}$$

- Speed control gain (KVP, parameter P2-04)

  This parameter determines the response of speed loop. The bigger KVP value will cause the higher response frequency of speed loop and better following error. However, if the value is set too big, it would easily cause machinery resonance. The response frequency of speed loop must be 4~6 times higher than the response frequency of position loop. Otherwise, the machinery might vibrate or overshoot when positioning. The calculation of speed loop frequency response is as the following:

  $$\text{Speed Loop Frequency Response } f_v = \left(\frac{KVP}{2\pi}\right) X \left[\frac{(1+P1\text{-}37/10)}{(1+JL/JM)}\right] Hz$$

  JM: Motor Inertia
  JL: Load Inertia
  P1-37: 0.1 times

  When P1-37 (estimation or setting) equals the real inertia ratio (JL/JM), the real speed loop frequency response will be: $f_v = \frac{KVP}{2\pi}$ Hz

- Speed integral compensation (KVI, parameter P2-06)

  The higher the KVI value is, the better capability of eliminating the deviation will be. However, if the value is set too big, it might easily cause the vibration of machinery. It is suggested to set the value as the following:

  $$\text{KVI (Parameter P2-06)} \leq 1.5 \times \text{Speed Loop Frequency Response}$$

- Low-pass filter of resonance suppression (NLP, parameter P2-25)

  The high value of inertia ratio will reduce the frequency response of speed loop. Therefore, the KVP value must be increased to maintain the response frequency. During the process of increasing KVP value, it might cause machinary resonance. Please use this parameter to elimiate the noise of resonance. The bigger the value is, the better the capability of improving high-frequency noise will be. However, if the value is set too big, it would cause the unstability of speed loop and overshoot. It is suggested to set the value as the following:

$$\text{NLP (Parameter P2-25)} \leq \frac{10000}{6 \times \text{Speed Loop Frequency Response (Hz)}}$$

- Anti-interference gain (DST, parameter P2-26)

  This parameter is used to strengthen the ability of resisting external force and gradually eliminate overshoot during acceleration / deceleration. Its default value is 0. It is suggested not to adjust the value in manual mode, unless it is for fine-tuning.

- Position feed forward gain (PFG, parameter P2-02)

  It can reduce the position error and shorten the settling time. However, if the value is set too big, it might cause overshoot. If the setting of e-gear ratio is bigger than 10, it might cause the noise as well.

Chapter 6 Control Modes of Operation

6.1 Selection of Operation Mode

Three basic operation modes are provided in this servo drive, position, speed and torque. Users can use single mode (only in one-mode control) and dual mode to control. The following table lists all operation mode and description.

Mode Name		Short Name	Setting Code	Description
Single Mode	Position mode (Terminal input)	PT	00	The servo drive receives position command and commands the motor to the target position. The position command is input via terminal block and receives pulse signal.
	Speed Mode	S	02	The servo drive receives speed command and commands the motor to the target speed. The speed command can be issued by register (3 sets of registers in total) or the external analog voltage (-10V ~ +10V). DI signal is used to select the command source.
	Speed mode (No analog input)	Sz	04	The servo drive receives speed command and commands the motor to the target speed. The speed command is issued by register (3 sets of registers in total) and cannot be issued by the external terminal block. DI signal is used to select the command source.
	Torque mode	T	03	The servo drive receives torque command and commands the motor to the target torque. The torque command can be issued by register (3 sets of registers in total) or the external analog voltage (-10V ~ +10V). DI signal is used to select the command source.

Mode Name		Short Name	Setting Code	Description
Single mode	Torque mode (No analog input)	Tz	05	The servo drive receives torque command and commands the motor to the target torque. The torque command can be issued by register (3 sets of registers in total) and cannot be issued by the external terminal block. DI signal is used to select the command source.
Dual Mode		PT-S	06	Switch the mode of PT and S via DI signal.
		PT-T	07	Switch the mode of PT and T via DI signal.
		S-T	0A	Switch the mode of S and T via DI signal.
		Reserved	0B	Reserved
		Reserved	0C	Reserved

The steps of changing mode:

(1) Switching the servo drive to Servo Off status. Turning SON signal of Digit input to be off can complete this action.

(2) Using parameter P1-01. (Refer to chapter 7).

(3) After the setting is completed, cut the power off and restart the drive again.

The following sections describe the operation of each control mode, including control structure, command source and loop gain adjustment, etc.

6.2 Position Mode

The followings describe the related information and settings of position mode.

6.2.1 Position Command in PT Mode

PT, position command is the pulse input from terminal block. There are three types of pulse and each type has positive/negative logic which can be set in parameter P1-00. See as the followings.

P1-00▲	PTT	External Pulse Input Type		Address: 0100H 0101H
	Operation Interface:	Panel/Software	Communication	Related Section: Section 6.2.1
	Default:	0x2		
	Control Mode:	PT		
	Unit:	-		
	Range:	0 ~ 1142		
	Data Size:	16-bit		
	Display Format:	Hexadecimal		

Settings:

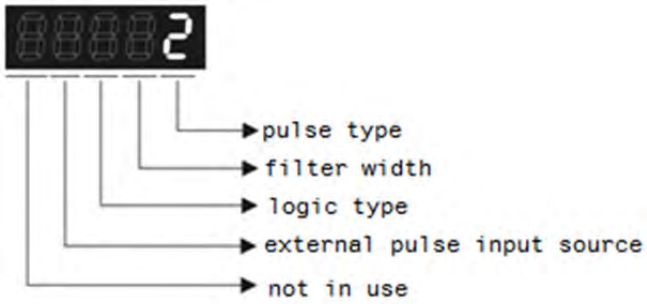

- Pulse Type
  0: AB phase pulse (4x)
  1: Clockwise (CW) and Counterclockwise (CCW) pulse
  2: Pulse + symbol
  Other settings: reserved

- Filter Width

  If the received frequency is much higher than the setting, it will be regarded as the noise and filtered out.

Setting Value	Low-speed Filter Frequency (Min. pulse width *note 1)	Setting Value	High-speed Filter Frequency (Min. pulse width *note 1)
0	0.83Mpps (600ns)	0	3.33Mpps (150ns)
1	208Kpps (2.4us)	1	0.83Mpps (600ns)
2	104Kpps (4.8us)	2	416Kpps (1.2us)
3	52Kpps (9.6us)	3	208Kpps (2.4us)
4	No Filter Function	4	No Filter Function

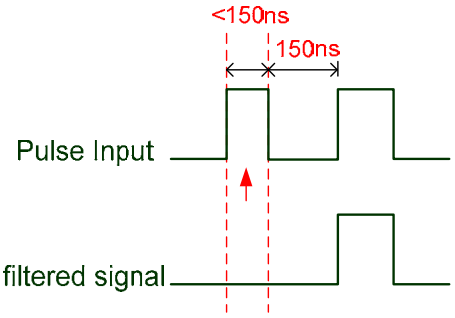

When this pulse frequency is less than 150 ns, this signal will be regarded as a low-level pulse and two input pulses will be regarded as one input pulse.

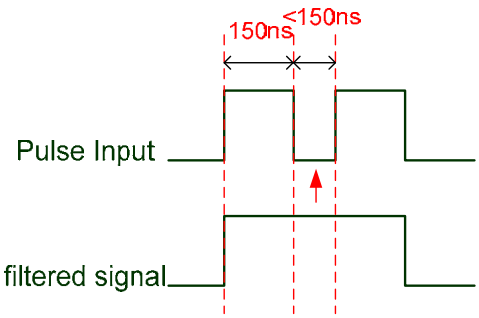

When this pulse frequency is less than 150 ns, this signal will be regarded as a high-level pulse and two input pulses will be regarded as one input pulse.

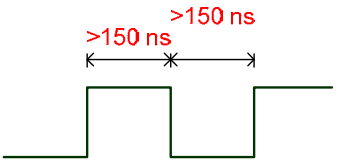

When the pulse frequencies of high-level duty and low-level duty both are greater than 150 ns, the signal will not be filtered (that is, the pulse command will pass through).

If the user uses 2~4MHz input pulse, it is suggested to set the filter value to 4.

Note: When the signal is the high-speed pulse specification of 4 Mpps and the settings value of the filter is 4, then the pulse will not be filtered.

- Logic Type

Logic		Pulse Type	Forward	Reverse
0	Positive Logic	AB phase pulse	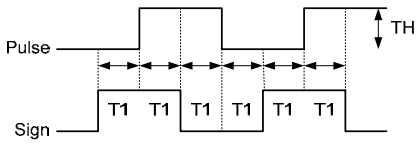	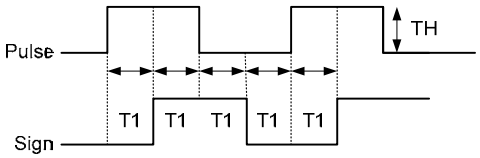
		CW + CCW pulse	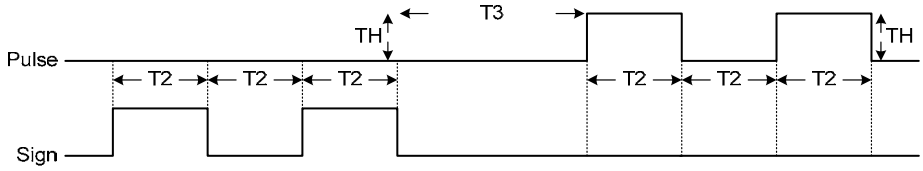	
		Pulse + Symbol	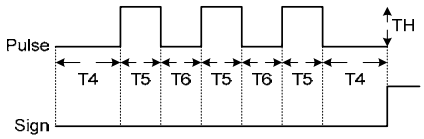	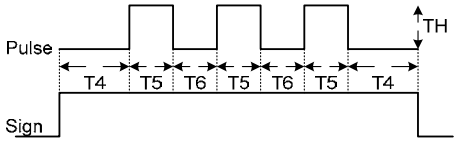
1	Negative Logic	AB phase pulse	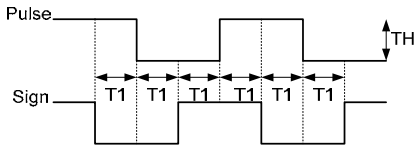	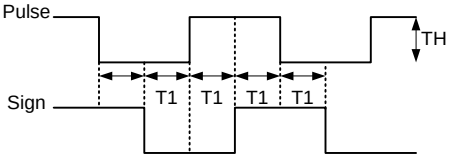
		CW + CCW pulse	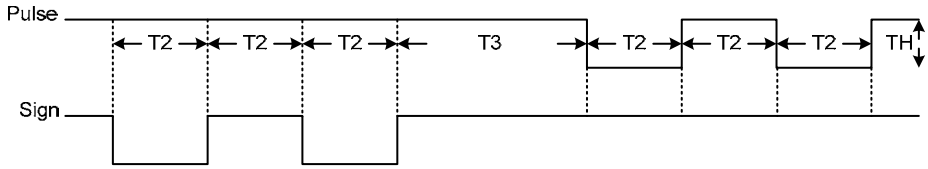	
		Pulse + Symbol	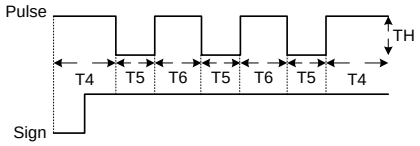	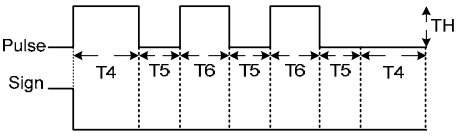

Pulse specification		Max. input frequency	Min. time width					
			T1	T2	T3	T4	T5	T6
High-speed pulse	Differential Signal	4Mpps	62.5ns	125ns	250ns	200ns	125ns	125ns
Low-speed pulse	Differential Signal	500Kpps	0.5μs	1μs	2μs	2μs	1μs	1μs
	Open collector	200Kpps	1.25μs	2.5μs	5μs	5μs	2.5μs	2.5μs

Pulse specification		Max. input frequency	Voltage specification	Forward specification
High-speed pulse	Differential Signal	4Mpps	5V	< 25mA
Low-speed pulse	Differential Signal	500Kpps	2.8V ~ 3.7V	< 25mA
	Open collector	200Kpps	24V (Max.)	< 25mA

- The Source of External Pulse:
  0: Low-speed optical coupler (CN1 Pin: PULSE, SIGN)
  1: High-speed differential (CN1 Pin: HPULSE, HSIGN)

Position pulse can be input from these terminals, /PULSE (41), PULSE (43), HPULSE (38), /HPULSE (36), /SIGN (37), SIGN (39) and HSIGN (42), /HSIGN (40). It can be an open-collector circuit or line driver. Please refer to Chapter 3.10.1 for wiring method.

6.2.2 Control Structure of Position Mode

The basic control structure is as the following diagram:

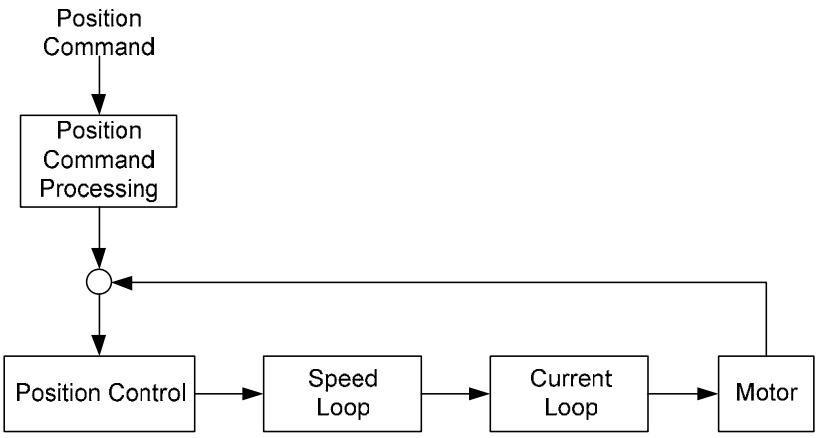

For a better control, the pulse signal should be processed and modified through position command unit. Structure is shown as the diagram below.

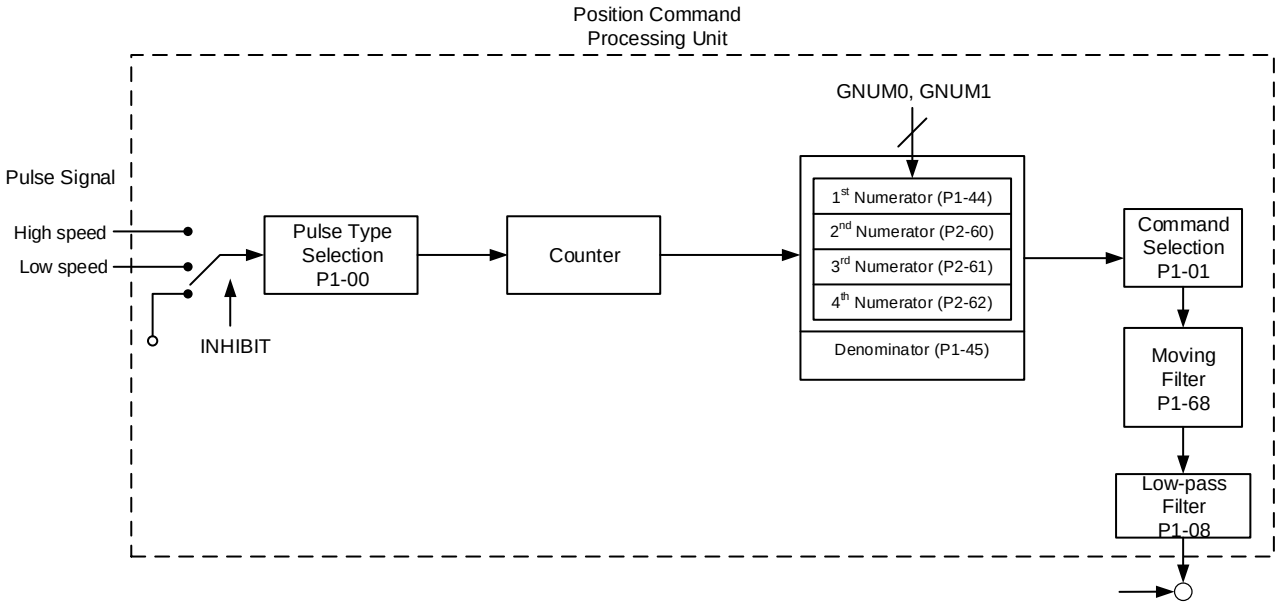

PT mode which is shown in the figure can be selected via P1-01. It can set E-gear ratio for the proper position resolution. Moreover, either S-curve filter or low-pass filter can be used to smooth the command. See the description in later parts.

Pulse Command Inhibit Input Function (INHP)

Use DI to select INHP (Refer to P2-10~17, P2-36 and table 7.1 INHP (45)) before using this function. If not, this function will be unable to use. When DI (INHP) is ON, the pulse command will be cleared in position control mode and the motor will stop running.

6.2.3 Electronic Gear Ratio

Related parameters:

P1-44▲	GR1	Electronic Gear Ratio (Numerator) (N1)		Address: 0158H 0159H
	Operation Interface:	Panel/Software	Communication	Related Section: Section 6.2.3
	Default:	16		
	Control Mode:	PT		
	Unit:	pulse		
	Range:	1 ~ (2^{26}-1)		
	Data Size:	32-bit		

Display Format:	Decimal

Settings:

Please refer to P2-60~P2-62 for the setting of multiple gear ratio (numerator).

NOTE PT mode, the setting value can be changed when Servo ON.

P1-45▲	GR2	Electronic Gear Ratio (Denominator) (M)		Address: 015AH 015BH
	Operation Interface:	Panel/Software	Communication	Related Section: Section 6.2.3
	Default:	10		
	Control Mode:	PT		
	Unit:	pulse		
	Range:	1 ~ (2^{31}-1)		
	Data Size:	32-bit		
	Display Format:	Decimal		

Settings: If the setting is wrong, the servo motor will easily have sudden unintended acceleration.

Please follow the rules for setting:

The setting of pulse input:

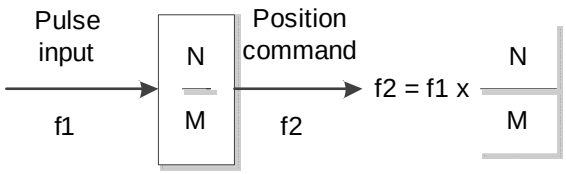

Range of command pulse input: 1 / 50 < Nx / M < 25600 (x=1, 2, 3, 4)

Electronic gear provides simple ratio change of travel distance. The high electronic gear ratio would cause the position command to be the stepped command. S-curve or low-pass filter can be used to improve the situation. When electronic gear ratio is set to 1, the motor will turn one cycle for every 10000PUU. When electronic gear ratio is changed to 0.5, then every two pulses from the command will be refer to one PUU of motor encoder.

For example, after setting the electronic gear ratio properly, the moving distance of the object is 1μm/pulse, which is easier to use.

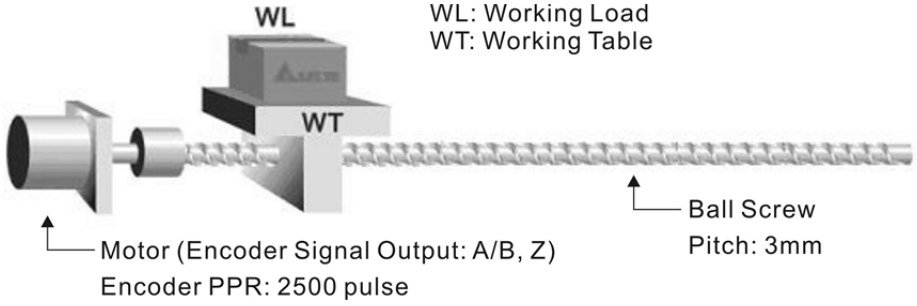

	Gear Ratio	Moving distance of each pulse command
Electronic gear is unapplied.	$=\frac{1}{1}$	$=\frac{3\times1000}{4\times2500}=\frac{3000}{10000}=\mu m$
Electronic gear is applied.	$=\frac{10000}{3000}$	$=1\mu m$

6.2.4 Low-pass Filter

Related parameters:

P1-08	PFLT	Smooth Constant of Position Command (Low-pass Filter)		Address: 0110H 0111H
	Operation Interface:	Panel/Software	Communication	Related Section: Section 6.2.4
	Default:	0		
	Control Mode:	PT		
	Unit:	10ms		
	Range:	0 ~ 1000		
	Data Size:	16-bit		
	Display Format:	Decimal		
	Example:	11 = 110 msec		

Settings: 0: Disabled

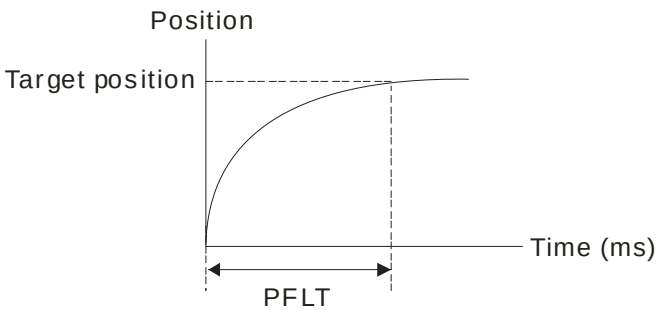

6.2.5 Gain Adjustment of Position Loop

Before setting the position control unit, users have to manually (P2-32) complete the setting of speed control unit since the speed loop is included in position loop. Then, set the proportional gain (parameter P2-00) and feed forward gain (parameter P2-02) of position loop. Users also can use the auto mode to set the gain of speed and position control unit automatically.

1) Proportional gain: Increase the gain so as to enhance the response bandwidth of position loop.

2) Feed forward gain: Minimize the deviation of phase delay

The position loop bandwidth cannot exceed the speed loop bandwidth. It is suggested that $fp \le \frac{fv}{4}$.

fv: response bandwidth of speed loop (Hz).

KPP = $2 \times \pi \times fp$.

fp: response bandwidth of position loop (Hz).

For example, the desired position bandwidth is 20 Hz → KPP = $2 \times \pi \times 20$= 125.

Related parameters:

P2-00	KPP	Position Loop Gain		Address: 0200H 0201H
	Operation Interface:	Panel/Software	Communication	Related Section: Section 6.2.5
	Default:	35		
	Control Mode:	PT		
	Unit:	rad/s		
	Range:	0 ~ 2047		
	Data Size:	16-bit		
	Display Format:	Decimal		

Settings: When the value of position loop gain is increased, the position response can be enhanced and the position error can be reduced. If the value is set too big, it may easily cause vibration and noise.

P2-02	PFG	Position Feed Forward Gain		Address: 0204H 0205H
	Operation Interface:	Panel/Software	Communication	Related Section: Section 6.2.5
	Default:	50		
	Control Mode:	PT		
	Unit:	%		
	Range:	0 ~ 100		
	Data Size:	16-bit		
	Display Format:	Decimal		

Settings: If the position command is changed smoothly, increasing the gain value can reduce the position error. If the position command is not changed smoothly, decreasing the gain value can tackle the problem of mechanical vibration.

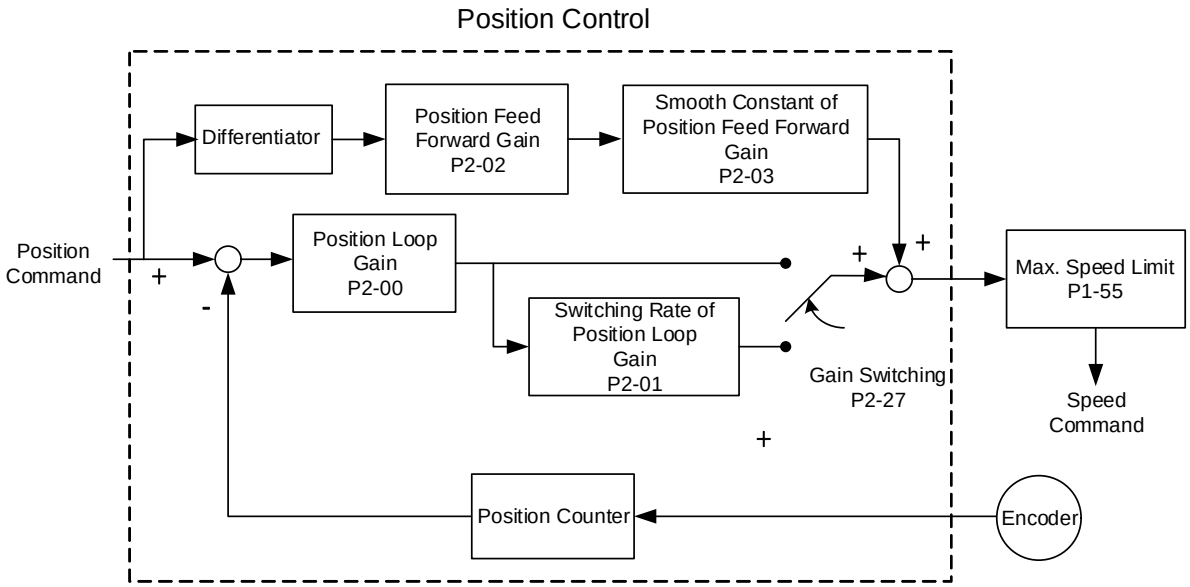

When the value of proportional gain, KPP is set too big, the response bandwidth of position loop will be increased and diminish the phase margin. And the motor rotor rotates vibrantly in forward and reverse direction at the moment. Thus, KPP has to be decreased until the rotor stops vibrating. When the external torque interrupts, the over-low KPP cannot meet the demand of position deviation. In this situation, parameter P2-02 can effectively reduce the position error.

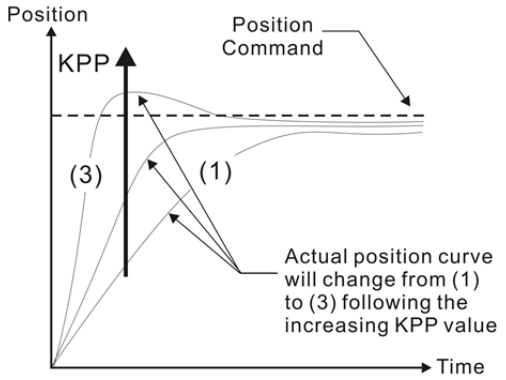

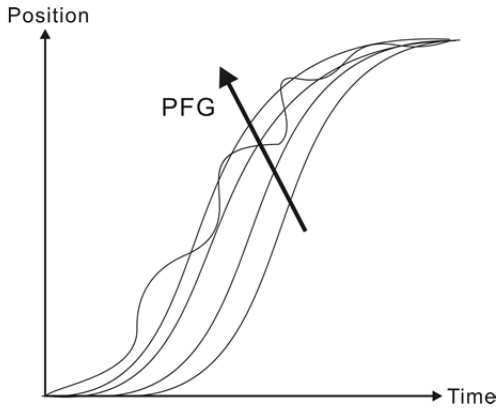

6.3 Speed Mode

Speed control mode (S or Sz) is applicable in precision speed control, such as CNC machine tools. This servo drive includes two types of command input, analog and register. Analog command input can use external voltage to control the motor speed. There are two methods in register input. One is used before operation. Users set different value of speed command in three registers, and then use SP0, SP1 of CN1 DI signal for switching. Another method is to change the value of register by communication. In order to deal with the problem of non-continuous speed command when switching register, a complete S-curve program is provided. In close-loop system, this servo drive adopts gain adjustment and integrated PI controller and two modes (manual and auto) for selection.

Users can set all parameters and all auto or auxiliary function will be disabled in manual mode. While in auto mode, it provides the function of load inertia estimation and parameter adjustment. In auto mode, parameters which set by users will be regarded as the default value.

6.3.1 Selection of Speed Mode

There are two types of speed command source, analog voltage and internal parameters. The selection is determined by CN1 DI signal. See as the followings.

<table>
<tr><th rowspan="2">Speed Command</th><th colspan="2">CN1 DI Signal</th><th colspan="3" rowspan="2">Command Source</th><th rowspan="2">Content</th><th rowspan="2">Range</th></tr>
<tr><th>SPD1</th><th>SPD0</th></tr>
<tr><td rowspan="2">S1</td><td rowspan="2">0</td><td rowspan="2">0</td><td rowspan="2">Mode</td><td>S</td><td>External analog signal</td><td>Voltage between V-REF-GND</td><td>+/-10 V</td></tr>
<tr><td>Sz</td><td>N/A</td><td>Speed command is 0</td><td>0</td></tr>
<tr><td>S2</td><td>0</td><td>1</td><td colspan="3" rowspan="3">Register parameter</td><td>P1-09</td><td>-50000 ~ 50000</td></tr>
<tr><td>S3</td><td>1</td><td>0</td><td>P1-10</td><td>-50000 ~ 50000</td></tr>
<tr><td>S4</td><td>1</td><td>1</td><td>P1-11</td><td>-50000 ~ 50000</td></tr>
</table>

- Status of SPD0 ~ SPD1: 0 means DI OFF, 1 means DI ON.
- When both SPD0 and SPD1 are 0, if it is in Sz mode, the command will be 0. Thus, if there is no need to use analog voltage as the speed command, Sz mode can be applied to tackle the problem of zero-drift. If it is in S mode, the command will be the voltage deviation between V-REF and GND. The range of input voltage is between -10V and +10V and its corresponding speed is adjustable (P1-40).
- When one of SPD0 and SPD1 is not 0, the speed command is from the internal parameter. The command is activated after changing the status of SPD0~SPD1. There is no need to use CTRG for triggering.
- The setting range of internal parameters is between -50000 and 50000. Setting value = setting range x unit (0.1r/min).

For example: P1-09 = +30000, setting value = +30000 x 0.1r/min = +3000r/min

The speed command not only can be issued in speed mode (S or Sz), but also in torque mode (T or Tz) as the speed limit.

6.3.2 Control Structure of Speed Mode

The basic control structure is shown as the following diagram:

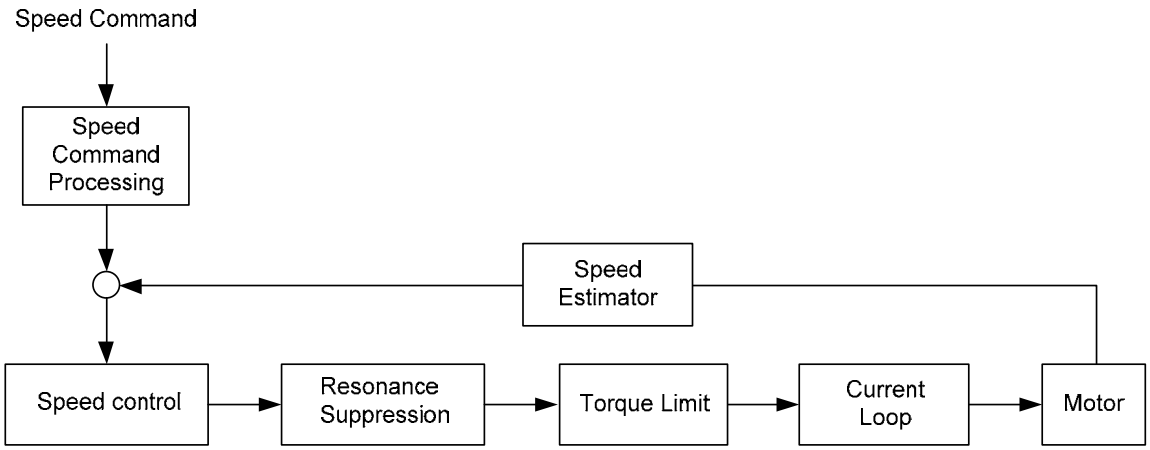

The speed command unit is to select speed command source according to Section 6.3.1, including the scaling (P1-40) setting and S-curve setting. The speed control unit manages the gain parameters of the servo drive and calculates the current command for servo motor in time. The resonance suppression unit is to suppress the resonance of mechanism. Detailed descriptions are shown as the following:

Here firstly introduces the function of speed command unit. Its structure is as the following diagram.

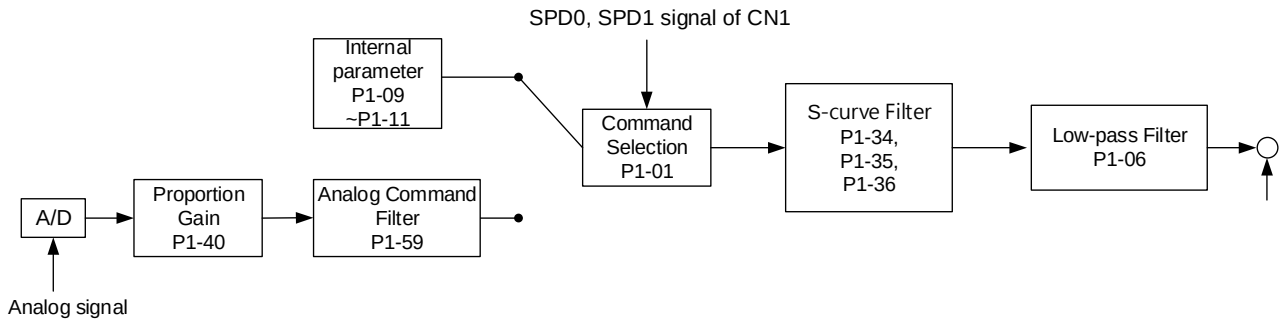

The upper path is the command from register while the lower one is external analog command. The command is selected according to the status of SPD0, SPD1 and P1-01(S or Sz). Usually, S-curve and low-pass filter are applied for having a smooth resonance of command.

6.3.3 Smoothing Speed Command

S-curve Filter

During the process of acceleration or deceleration, S-curve filter applies the program of three-stage acceleration curve for smoothing the motion command, which generates the continuous acceleration. It is for avoiding the jerk (the differentiation of acceleration) came from the sudden command change and indirectly causes the resonance and noise. Users can use acceleration constant of S-curve (TACC) to adjust the slope changed by acceleration, deceleration constant of S-curve (TDEC) to adjust the slope changed by deceleration and acceleration / deceleration constant of S-curve (TSL) to improve the status of motor activation and stop. The calculation of the time to complete the command is provided.

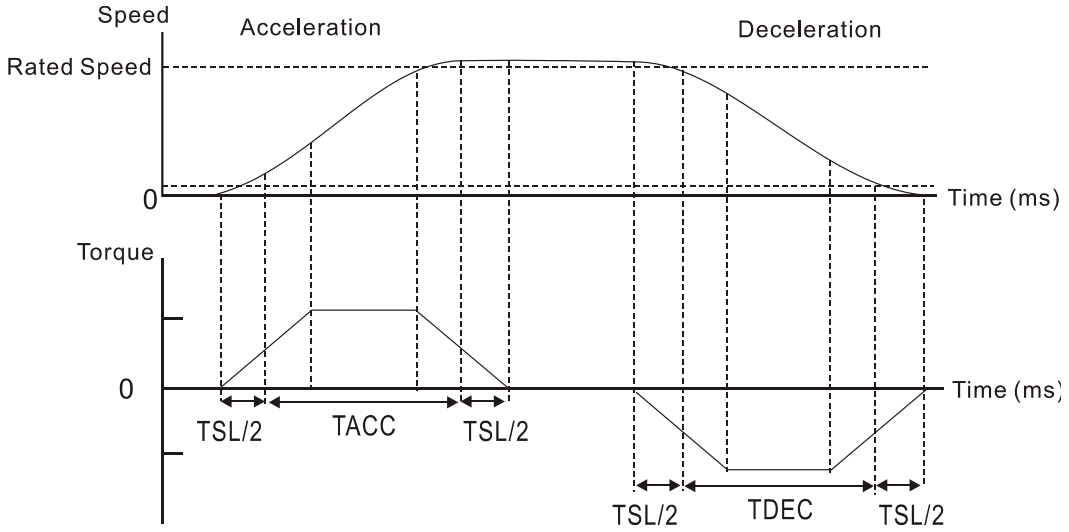

S-curve characteristics and Time relationship

Related parameters:

P1-34	TACC	Acceleration Constant of S-Curve		Address: 0144H 0145H
	Operation Interface:	Panel/Software	Communication	Related Section: Section 6.3.3
	Default:	200		
	Control Mode:	S		
	Unit:	ms		
	Range:	1 ~ 20000		
	Data Size:	16-bit		
	Display Format:	Decimal		

Settings: The time that speed command accelerates from 0 to 3000 r/min. P1-34, P1-35 and P1-36, the acceleration time of speed command from zero to the rated speed, all can be set individually.

NOTE 1) When the source of speed command is analog, and P1-36 is set to 0, it will disable S-curve function.

P1-35	TDEC	Deceleration Constant of S-Curve		Address: 0146H 0147H
	Operation Interface:	Panel/Software	Communication	Related Section: Section 6.3.3
	Default:	200		
	Control Mode:	S		
	Unit:	ms		
	Range:	1 ~ 20000		
	Data Size:	16-bit		
	Display Format:	Decimal		

Settings: The time that speed command decelerates from 3000 r/min to 0. P1-34, P1-35 and P1-36, the deceleration time of speed command from the rated speed to zero, all can be set individually.

NOTE 1) When the source of speed command is analog, and P1-36 is set to 0, it will disable S-curve function.

P1-36	TSL	Acceleration / Deceleration Constant of S-curve		Address: 0148H 0149H
	Operation Interface:	Panel/Software	Communication	Related Section: Section 6.3.3
	Default:	0		
	Control Mode:	S		
	Unit:	ms		
	Range:	0 ~ 10000 (0: Disabled)		
	Data Size:	16-bit		
	Display Format:	Decimal		

Settings: Acceleration / Deceleration Constant of S-Curve:

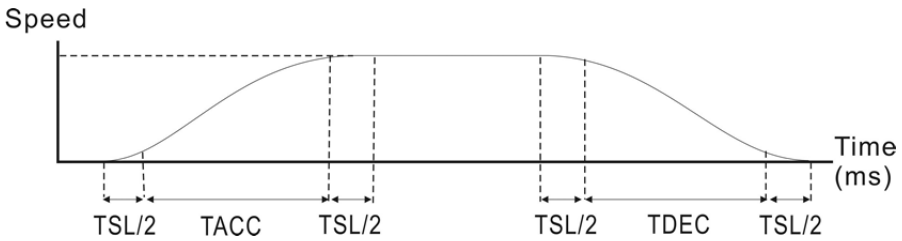

P1-34: Set the acceleration time of acceleration / deceleration of trapezoid-curve

P1-35: Set the deceleration time of acceleration / deceleration of trapezoid-curve

P1-36: Set the smoothing time of S-curve acceleration and deceleration

P1-34, P1-35 and P1-36 can be set individually.

NOTE 1) When the source of speed command is analog, and P1-36 is set to 0, it will disable S-curve function.

Analog Speed Command Filter

Analog speed command filter is provided especially for ASDA-B2 series users. It mainly helps with buffer when the analog input signal changes too fast.

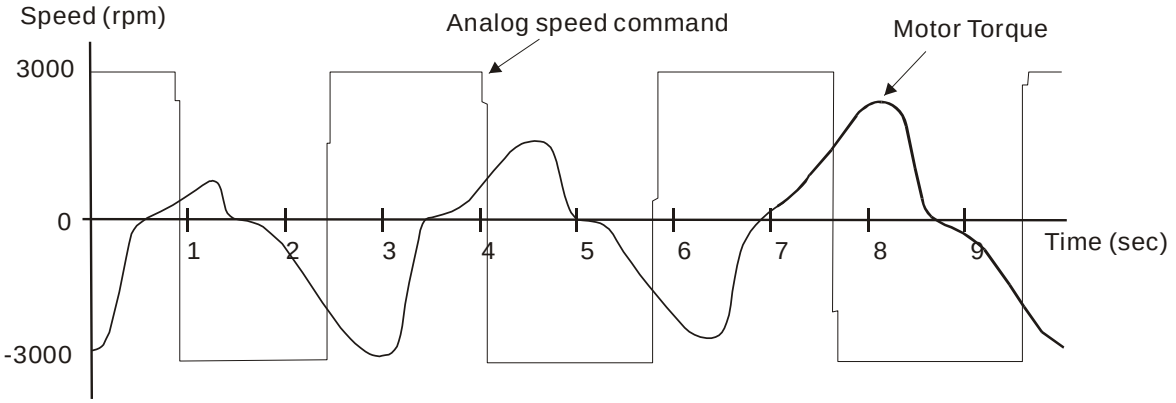

Analog speed command filter smooth the analog input command. Its time program is the same as S-curve filter in normal speed. Also, the speed curve and the acceleration curve are both continuous. The above is the diagram of analog speed command filter. The slope of speed command in acceleration and deceleration is different. Users could adjust the time setting (P1-34, P1-35 and P1-36) according to the actual situation to improve the performance.

Command End Low-pass Filter

It is usually used to eliminate the unwanted high-frequency response or noise. It also can smooth the command.

Related parameters:

P1-06	SFLT	Analog Speed Command (Low-pass Filter)		Address: 010CH 010DH
	Operation Interface:	Panel/Software	Communication	Related Section: Section 6.3.3
	Default:	0		
	Control Mode:	S		
	Unit:	ms		
	Range:	0 ~ 1000 (0: Disabled)		
	Data Size:	16-bit		
	Display Format:	Decimal		

Settings: 0: Disabled

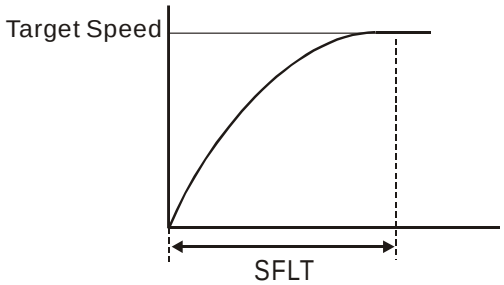

6.3.4 The Scaling of Analog Command

The motor speed command is controlled by the analog voltage deviation between V_REF and VGND. Use parameter P1-40 to adjust the speed-control slope and its range.

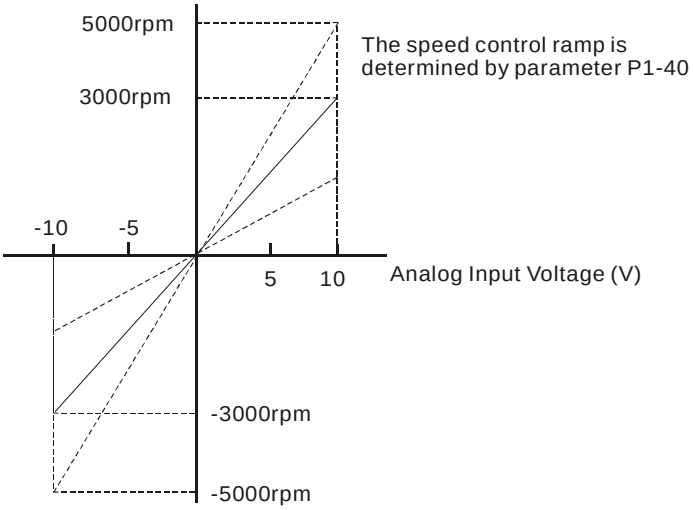

Related parameters:

P1-40▲	VCM	Max. Speed of Analog Speed Command		Address: 0150H 0151H
	Operation Interface:	Panel/Software	Communication	Related Section: Section 6.3.4
	Default:	rated speed		
	Control Mode:	S, T		
	Unit:	r/min		
	Range:	0 ~ 10000		
	Data Size:	16-bit		
	Display Format:	Decimal		

Settings: Maximum Speed of Analog Speed Command:

In speed mode, the analog speed command inputs the swing speed setting of the max. voltage (10V).

For example, if the setting is 3000, when the external voltage input is 10V, it means the speed control command is 3000r/min.

If the external voltage input is 5V, then the speed control command is 1500r/min.

6.3.5 Timing Diagram in Speed Mode

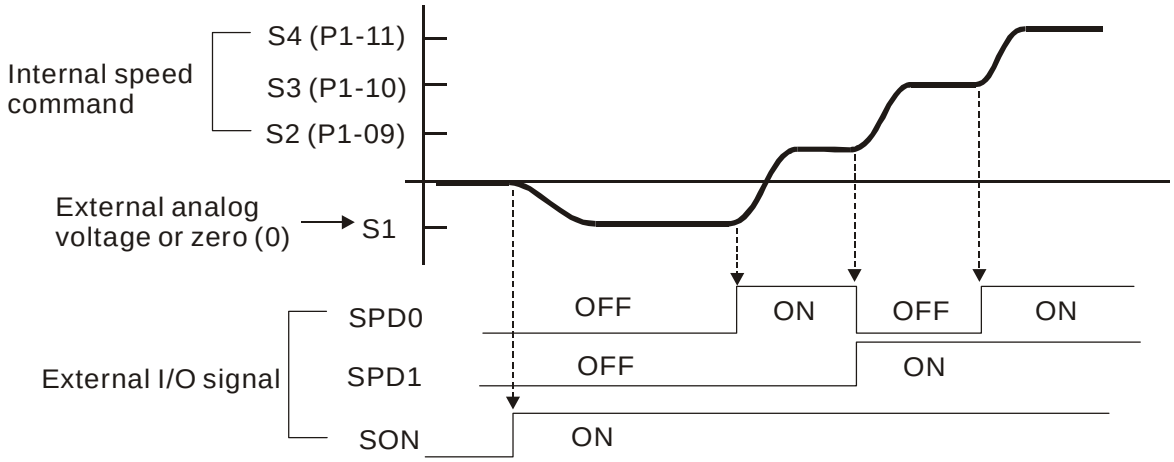

NOTE

1) OFF means the contact point is open while ON means the contact point is close.
2) When it is in Sz mode, the speed command S1 = 0; When it is in S mode, the speed command S1 is the external analog voltage input.
3) When the servo drive is On, please select the command according to SPD0~SPD1 status.

6.3.6 Gain Adjustment of Speed Loop

Here introduces the function of speed control unit. The following shows its structure.

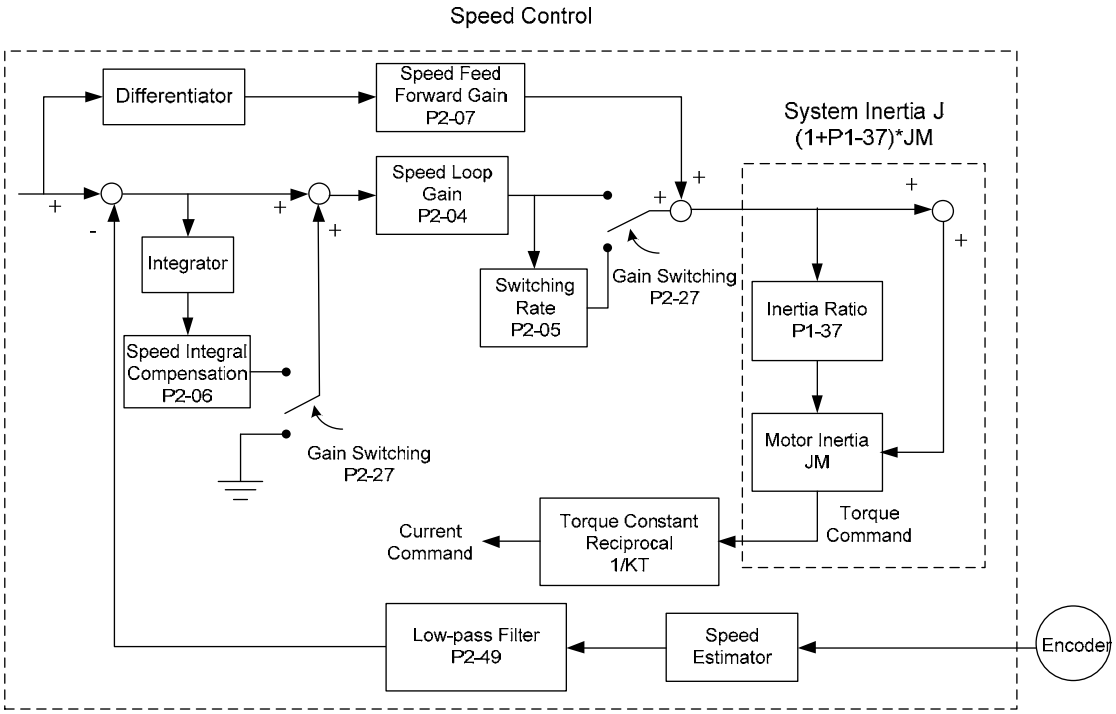

Many kinds of gain in speed control unit are adjustable. Two ways, manual and auto, are provided for selection.

Manual: All parameters are set by users and the auto or auxiliary function will be disabled in this mode.

Auto: General load inertia estimation is provided. It adjusts the parameter automatically. Its framework is divided into PI auto gain adjustment and PDFF auto gain adjustment.

Parameter P2-32 can be used to adjust the gain.

P2-32▲	AUT2	Tuning Mode Selection		Address: 0240H 0241H
	Operation Interface:	Panel/Software	Communication	Related Section: Section 5.6, Section 6.3.6
	Default:	0		
	Control Mode:	ALL		
	Unit:	N/A		
	Range:	0 ~ 2		
	Data Size:	16-bit		
	Display Format:	Hexadecimal		

Settings: 0: Manual Mode

1: Auto Mode (continuous adjustment)

2: Semi-auto Mode (non- continuous adjustment)

Relevant description of manual mode setting:

When P2-32 is set to 0, parameters related to gain control, such as P2-00, P2-02, P2-04, P2-06, P2-07, P2-25 and P2-26, all can be set by the user.

When switching mode from auto or semi-auto to manual, parameters about gain will be updated automatically.

Relevant description of auto mode setting:

Continue to estimate the system inertia, save the inertia ratio to P1-37 every 30 minutes automatically and refer to the stiffness and bandwidth setting of P2-31.

1. Set the system to manual mode 0 from auto 1 or semi-auto 2, the system will save the estimated inertia value to P1-37 automatically and set the corresponding parameters.
2. Set the system to auto mode 1 or semi-auto mode 2 from manual mode 0, please set P1-37 to the appropriate value.
3. Set the system to manual mode 0 from auto mode 1, P2-00, P2-04 and P2-06 will be modified to the corresponding parameters of auto mode.

4. Set the system to manual mode 0 from semi-auto mode 2, P2-00, P2-04, P2-06, P2-25 and P2-26 will be modified to the corresponding parameters of semi-auto mode.

Relevant description of semi-auto mode setting:

1. When the system inertia is stable, the value of P2-33 will be 1 and the system stops estimating. The inertia value will be saved to P1-37 automatically. When switching mode to semi-auto mode (from manual or auto mode), the system starts to estimate again.
2. When the system inertia is over the range, the value of P2-33 will be 0 and the system starts to estimate and adjust again.

Manual Mode

When P2-32 is set to 0, users can define Speed Loop Gain (P2-04), Speed Integral Compensation (P2-06) and Speed Feed Forward Gain (P2-07). Influence of each parameter is as the followings.

Proportional gain: To increase proportional gain can enhance the response frequency of speed loop.

Integral gain: To increase the integral gain could increase the low-frequency stiffness of speed loop, reduce the steady-state error and sacrifice the phase margin. The over high integral gain will cause the instability of the system.

Feed forward gain: Diminish the deviation of phase delay.

Related parameters:

P2-04	**KVP**	**Speed Loop Gain**		**Address: 0208H 0209H**
	Operation Interface:	Panel/Software	Communication	Related Section: Section 6.3.6
	Default:	500		
	Control Mode:	ALL		
	Unit:	rad/s		
	Range:	0 ~ 8191		
	Data Size:	16-bit		
	Display Format:	Decimal		

Settings: Increase the value of speed loop gain can enhance the speed response. However, if the value is set too big, it would easily cause resonance and noise.

P2-06	KVI	Speed Integral Compensation		Address: 020CH 020DH
	Operation Interface:	Keypad/Software	Communication	Related Section: Section 6.3.6
	Default:	100		
	Control Mode:	ALL		
	Unit:	rad/s		
	Range:	0 ~ 1023		
	Data Size:	16-bit		
	Display Format:	Decimal		

Settings: Increasing the value of speed integral compensation can enhance speed response and diminish the deviation of speed control. However, if the value is set too big, it would easily cause resonance and noise.

P2-07	KVF	Speed Feed Forward Gain		Address: 020EH 020FH
	Operation Interface:	Panel/Software	Communication	Related Section: Section 6.3.6
	Default:	0		
	Control Mode:	ALL		
	Unit:	%		
	Range:	0 ~ 100		
	Data Size:	16-bit		
	Display Format:	Decimal		

Settings: When the speed control command runs smoothly, increasing the gain value can reduce the speed command error. If the command does not run smoothly, decreasing the gain value can reduce the mechanical vibration during operation.

Theoretically, stepping response can be used to explain proportional gain (KVP), integral gain (KVI) and feed forward gain (KVF). Here, the frequency domain and time domain are used to illustrate the basic principle.

Frequency Domain

STEP 1: Set the value of KVI=0, the value of KVF=0 and adjust the value of KVP.

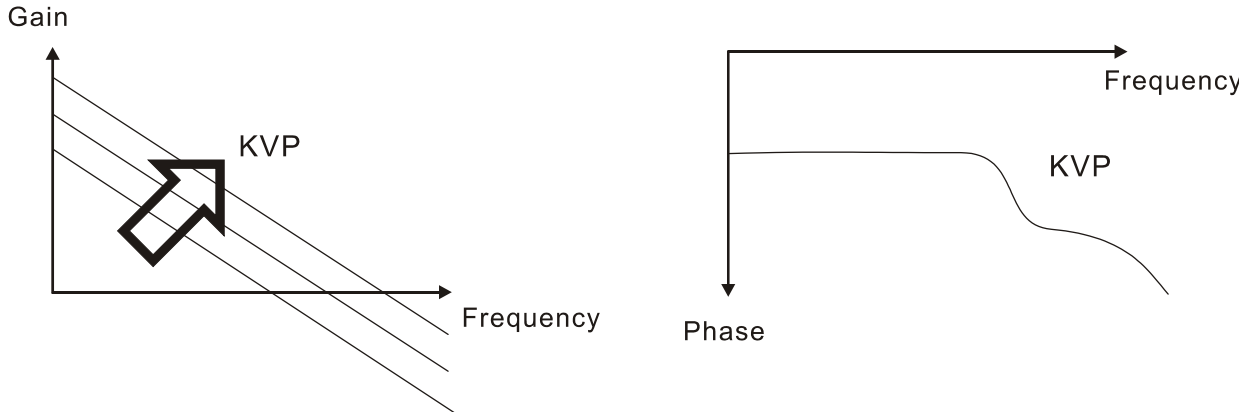

STEP 2：Fix the value of KVP and adjust the value of KVI.

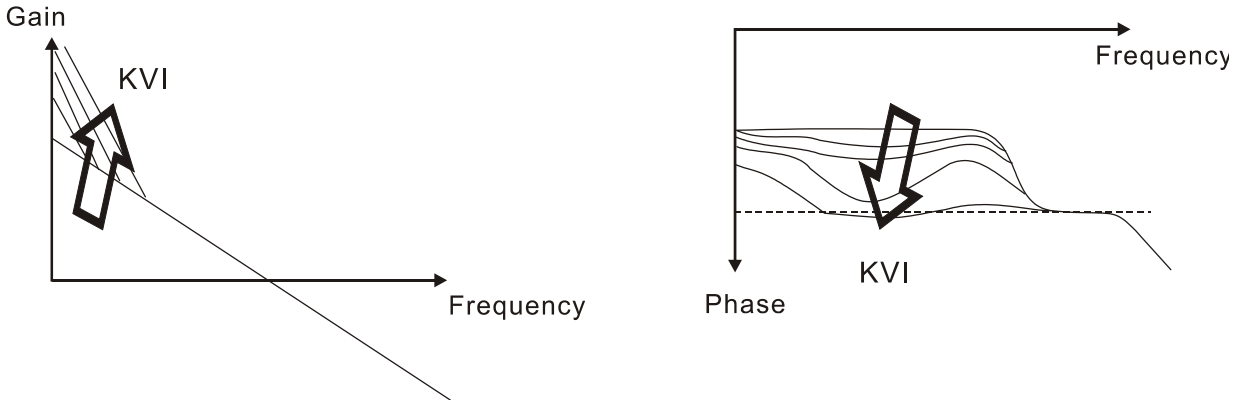

STEP 3：Select the value of KVI, if the value of phase margin is too small, re-adjust the value of KVP again to obtain the value, 45deg of phase margin.

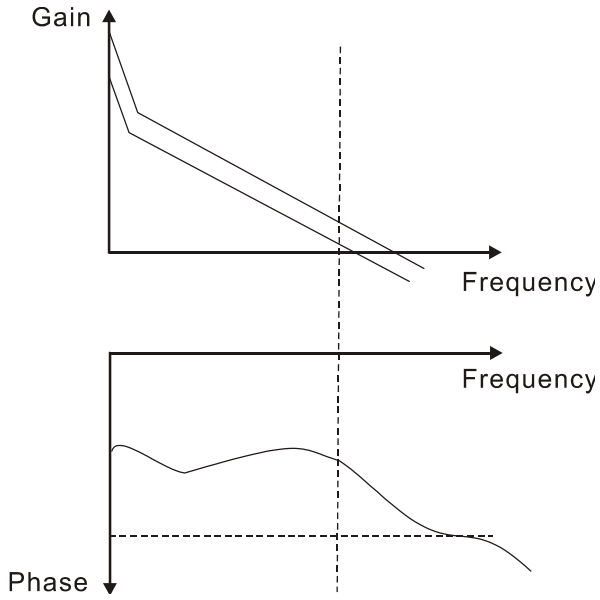

Time Domain

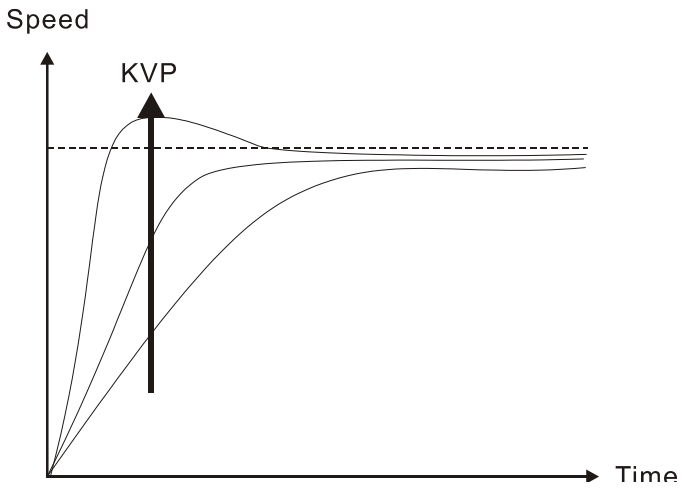

The bigger KVP value cause higher bandwidth and shorten the rising time. However, if the value is set too big, the phase margin will be too small.

To steady-state error, the result is not as good as KVI. But it helps to reduce the dynamic following error.

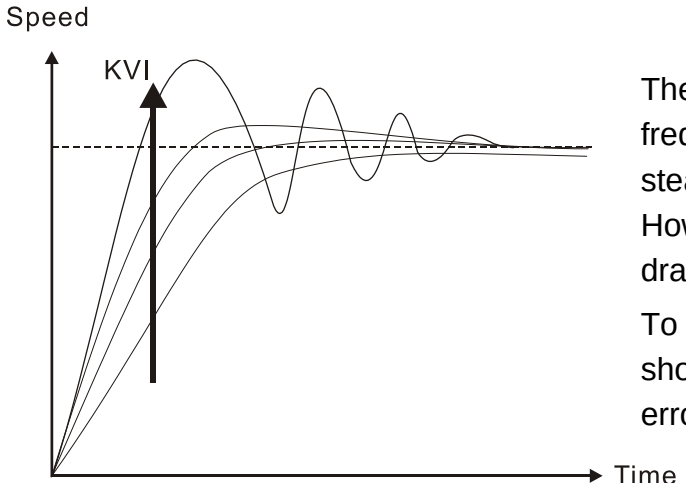

The bigger KVI value cause greater low-frequency gain and shorten the time the steady-state error returns to zero. However, the phase margin will dramatically decrease as well.

To steady-state error, it is very helpful but shows no benefit to dynamic following error.

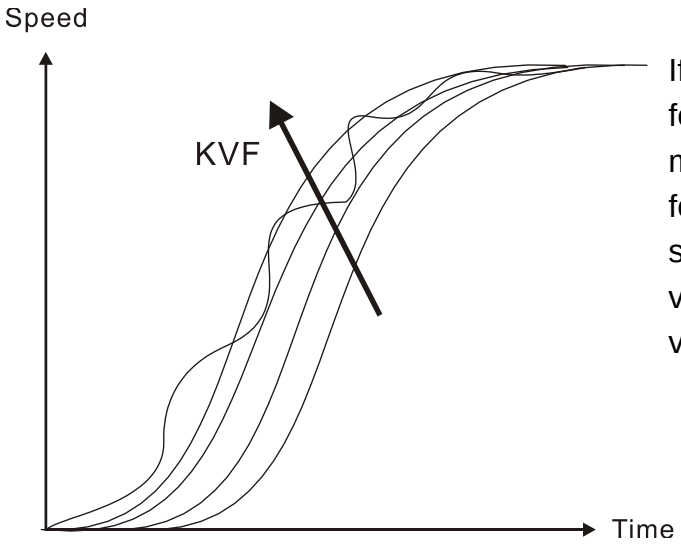

If the KVF value closes to 1, the feed forward compensation will be more complete and the dynamic following error will become smaller. However, if the KVF value is set too big, it would cause vibration.

Generally, instrument is needed when applying frequency domain for measurement. Users are required to adopt the measurement techniques; while time domain only needs a scope and goes with the analog input / output terminal provided by the servo drive. Thus, time domain is frequently used to adjust PI controller. The abilities of PI controller to deal with the resistance of torque load and the following command are the same.

That is to say, the following command and resistance of torque load have the same performance in frequency domain and time domain. Users can reduce the bandwidth by setting the low-pass filter in command end.

Auto Mode

Auto mode adopts adaptive principle. The servo drive automatically adjusts the parameters according to the external load. Since the adaptive principle takes longer time, it will be unsuitable if the load changes too fast. It would be better to wait until the load inertia is steady or changes slowly. Depending on the speed of signal input, the adaptive time will be different from one another.

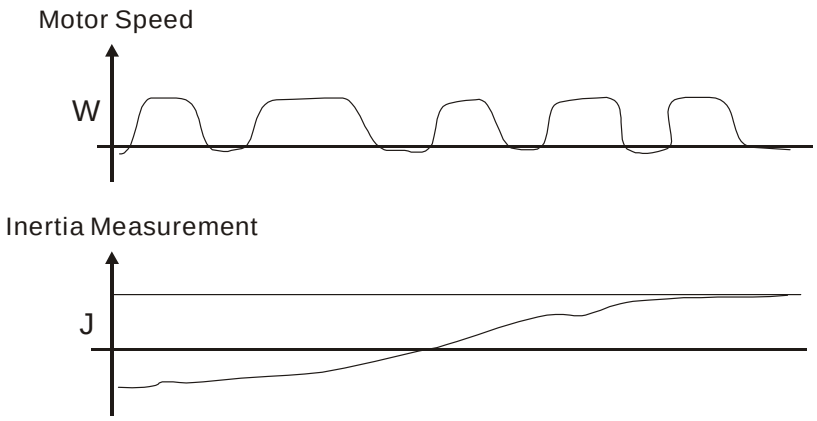

6.3.7 Resonance Suppression

When resonance occurs, it is probably because the stiffness of the control system is too strong or the response is too fast. Eliminating these two factors might improve the situation. In addition, low-pass filter (parameter P2-25) and notch filter (parameter P2-23 and P2-24) are provided to suppress the resonance if not changing the control parameters.

Related parameters:

P2-23	NCF1	Resonance Suppression (Notch Filter) 1		Address: 022EH 022FH
	Operation Interface:	Panel/Software	Communication	Related Section: Section 6.2.5
	Default:	1000		
	Control Mode:	ALL		
	Unit:	Hz		
	Range:	50 ~ 2000		
	Data Size:	16-bit		
	Display Format:	Decimal		

Settings: The first setting value of resonance frequency. If P2-24 is set to 0, this function is disabled. P2-43 and P2-44 are the second Notch filter.

P2-24	DPH1	Resonance Suppression (Notch Filter) Attenuation Rate (1)		Address: 0230H 0231H
	Operation Interface:	Panel/Software	Communication	Related Section: Section 6.3.7
	Default:	0		
	Control Mode:	ALL		
	Unit:	dB		
	Range:	0 ~ 32 (0: Disabled)		
	Data Size:	16-bit		
	Display Format:	Decimal		

Settings: The first resonance suppression (notch filter) attenuation rate. When this parameter is set to 0, the function of Notch filter is disabled.

P2-43	NCF2	Resonance Suppression (Notch Filter) 2		Address: 0256H 0257H
	Operation Interface:	Panel/Software	Communication	Related Section: Section 6.3.7
	Default:	1000		
	Control Mode:	ALL		
	Unit:	Hz		
	Range:	50 ~ 2000		
	Data Size:	16-bit		
	Display Format:	Decimal		

Settings: The second setting value of resonance frequency. If P2-44 is set to 0, this function is disabled. P2-23 and P2-24 are the first Notch filter.

P2-44	DPH2	Resonance Suppression (Notch Filter) Attenuation Rate (2)		Address: 0258H 0259H
	Operation Interface:	Panel/Software	Communication	Related Section: Section 6.3.7
	Default:	0		
	Control Mode:	ALL		
	Unit:	dB (0: Disable the function of notch filter)		
	Range:	0 ~ 32		
	Data Size:	16-bit		
	Display Format:	Decimal		

Settings: The second resonance suppression (notch filter) attenuation rate. When this parameter is set to 0, the function of Notch filter is disabled.

P2-45	NCF3	Resonance Suppression (Notch Filter) 3		Address: 025AH 025BH
	Operation Interface:	Panel/Software	Communication	Related Section: Section 6.3.7
	Default:	1000		
	Control Mode:	ALL		
	Unit:	Hz		
	Range:	50 ~ 2000		

Data Size:	16-bit
Display Format:	Decimal

Settings: The third group of mechanism resonance frequency setting value. If P2-46 is set to 0, this function will be disabled. P2-23 and P2-24 are the first group of resonance suppression (Notch filter).

P2-46	DPH3	Resonance Suppression (Notch Filter) Attenuation Rate (3)	Address: 025CH 025DH

Operation Interface:	Panel/Software	Communication	Related Section: Section 6.3.7
Default:	0		
Control Mode:	ALL		
Unit:	dB		
Range:	0 ~ 32		
Data Size:	16-bit		
Display Format:	Decimal		

Settings: The third group of resonance suppression (Notch filter) attenuation rate. Set the value to 0 to disable the function of Notch filter.

P2-25	NLP	Low-pass Filter of Resonance Suppression	Address: 0232H 0233H

Operation Interface:	Keypad/Software	Communication	Related Section: Section 6.3.7
Default:	0.2 (1kW and below models) or 0.5 (other models)	2 (1kW and below models) or 5 (other models)	
Control Mode:	ALL		
Unit:	1ms	0.1ms	
Range:	0.0 ~ 100.0	0 ~ 1000	
Data Size:	16-bit		
Display Format:	One-digit	Decimal	
Input Value Example:	1.5 = 1.5 ms	15 = 1.5 ms	

Settings: Set the low-pass filter of resonance suppression. When the value is set to 0, the function of low-pass filter is disabled.

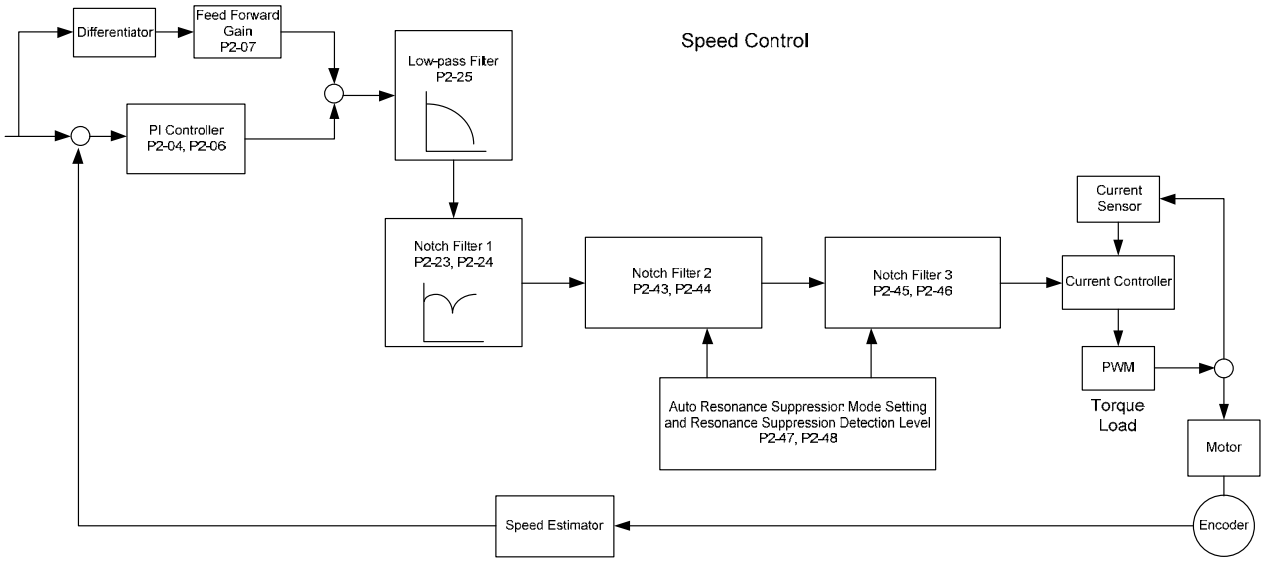

There are two sets of auto resonance suppression, one is P2-43 and P2-44 and another one is P2-45 and P2-46. When the resonance occurs, set P2-47 to 1 or 2 (enable the function of resonance suppression), the servo drive searches the point of resonance frequency and suppresses the resonance automatically. Write the point of frequency into P2-43 and P2-45 and write the attenuation rate into P2-44 and P2-46. When P2-47 is set to 1, the system will set P2-47 to 0 (disable the function of auto suppression) automatically after completing resonance suppression and the system is stable for 20 minutes. When P2-47 is set to 2, the system will keep searching the point of resonance.

When P2-47 is set to 1 or 2, but resonance still exists, please confirm the value of parameter P2-44 and P2-46. If one of them is 32, it is suggested to reduce the speed bandwidth first and then start to estimate again. If the value of both is smaller than 32 and resonance still exists, please set P2-47 to 0 first and then manually increase the value of P2-44 and P2-46. It is suggested to reduce the bandwidth if the resonance has not been improved. Then use the function of auto resonance suppression.

When manually increase the value of P2-44 and P2-46, please check if the value of both is bigger than 0. If yes, it means the frequency point of P2-43 and P2-45 is the one searched by auto resonance suppression. If the value of both is 0, it means the default, 1000 of P2-43 and P2-45 is not the one searched by auto resonance suppression. Deepen the resonance suppression attenuation rate might worsen the situation.

Settings of P2-47		
Current Value	Desired Value	Function
0	1	Clear the setting value of P2-43 ~ P2-46 and enable auto resonance suppression function.
0	2	Clear the setting value of P2-43 ~ P2-46 and enable auto resonance suppression function.
1	0	Save the setting value of P2-43 ~ P2-46 and disable auto resonance suppression function.

Settings of P2-47		
Current Value	Desired Value	Function
1	1	Clear the setting value of P2-43 ~ P2-46 and enable auto resonance suppression function.
1	2	Do not clear the setting value of P2-43 ~ P2-46 and enable auto resonance suppression function continuously.
2	0	Save the setting value of P2-43 ~ P2-46 and disable auto resonance suppression function.
2	1	Clear the setting value of P2-43 ~ P2-46 and enable auto resonance suppression function.
2	2	Do not clear the setting value of P2-43 ~ P2-46 and enable auto resonance suppression function continuously.

Flowchart of auto resonance suppression:

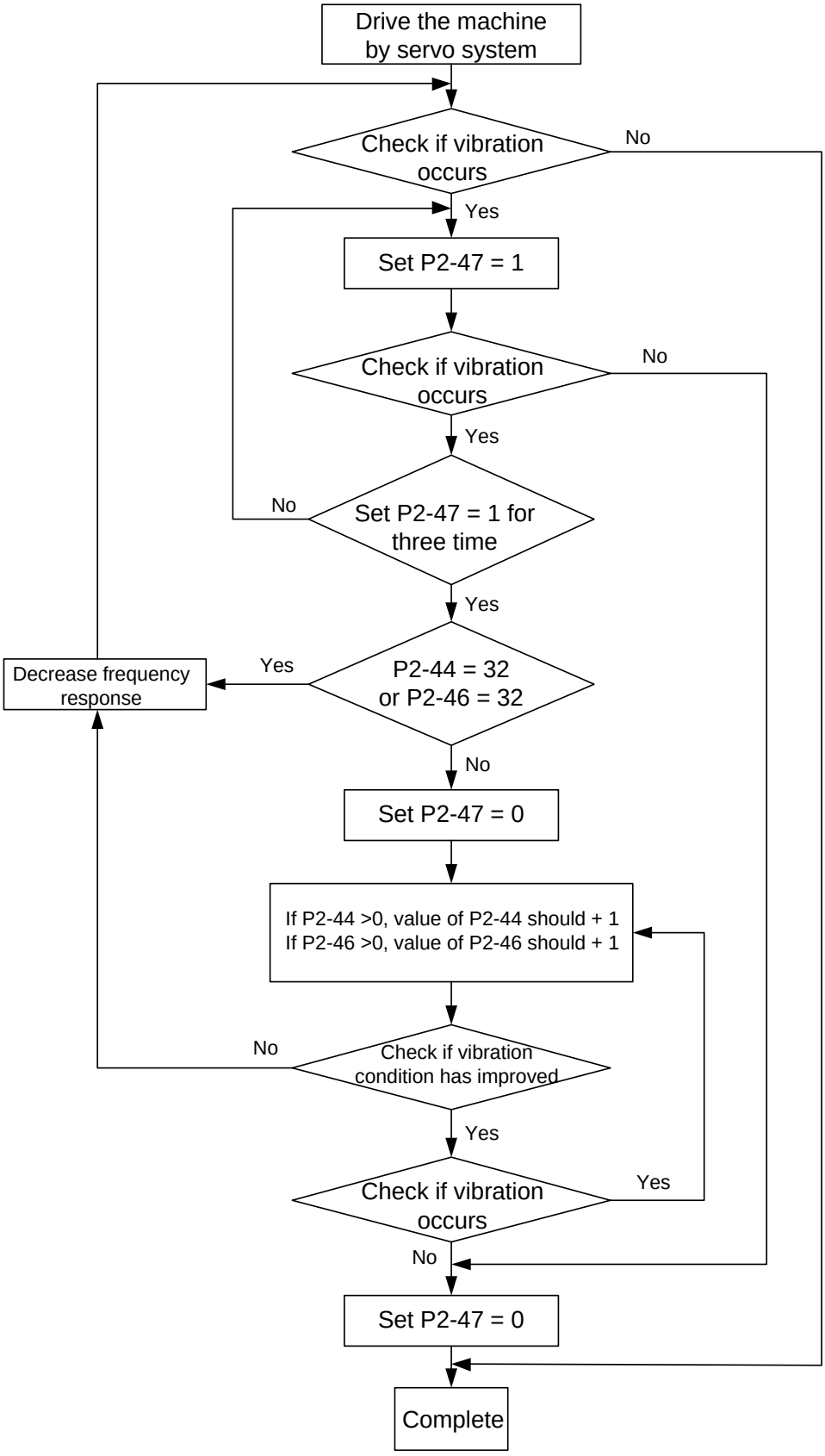

Here illustrates the effect via low-pass filter (parameter P2-25). The following diagram is the system open-loop gain with resonance.

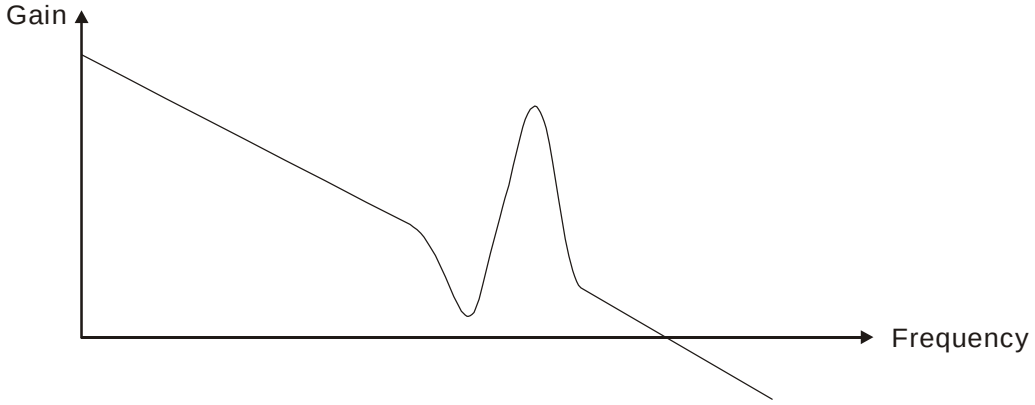

When the value of P2-25 is increased from 0, BW becomes smaller (See as the following diagram). Although it solves the problem of resonance frequency, the response bandwidth and phase margin is reduced.

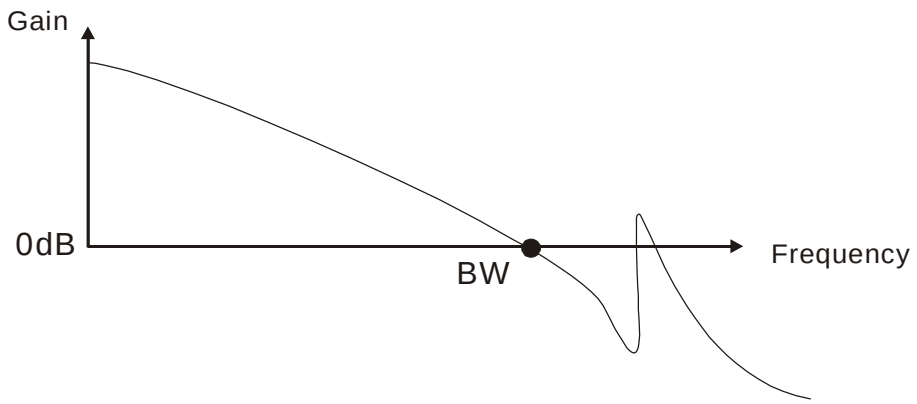

If users know the resonance frequency, notch filter (parameter P2-23 and P2-24) can directly eliminate the resonance. The frequency setting range of notch filter is merely from 50 to 1000Hz. The suppression strength is from 0 to 32dB. If the resonance frequency is not within the range, it is suggested to use low-pass filter (parameter P2-25).

Here firstly illustrates the influence brought by notch filter (P2-23 and P2-24) and low-pass filter (P2-25). The following diagrams are the system of open-loop gain with resonance.

Resonance suppression with notch filter

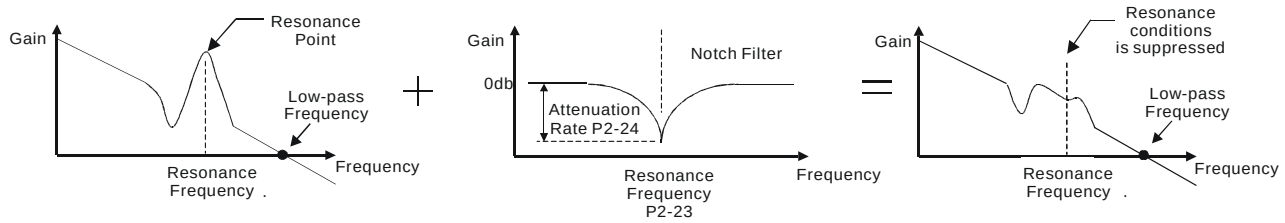

Resonance suppression with low-pass filter

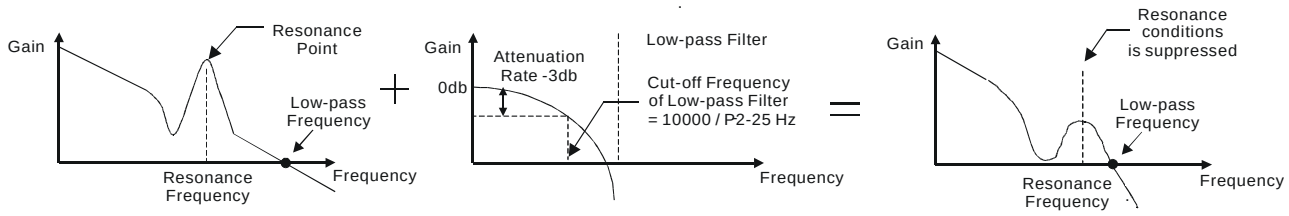

When the value of P2-25 is increased from 0, BW becomes smaller. Although it solves the problem of resonance frequency, the response bandwidth and phase margin is reduced. Also, the system becomes unstable.

If users know the resonance frequency, notch filter (parameter P2-23 and P2-24) can directly eliminate the resonance. In this case, notch filter will be more helpful than low-pass filter. However, if the resonance frequency drifts because of time or other factors, notch filter will not do.

6.4 Torque Mode

Torque control mode (T or Tz) is appropriate in torque control application, such as printing machine, winding machine, etc. There are two kinds of command source, analog input and register. Analog command input uses external voltage to control the torque of the motor while register uses the internal parameters (P1-12~P1-14) as the torque command.

6.4.1 Selection of Torque Command

Torque command source are external analog voltage and parameters. It uses CN1 DI signal for selection. See as below.

Torque Command	DI signal of CN1		Command Source			Content	Range
	TCM1	TCM0					
T1	0	0	Mode	T	External analog signal	Voltage between T-REF-GND	+/- 10 V
				Tz	None	Torque command is 0	0
T2	0	1	Parameters			P1-12	+/- 300 %
T3	1	0				P1-13	+/- 300 %
T4	1	1				P1-14	+/- 300 %

- The status of TCM0 ~ TCM1: 0 means DI OFF and 1 means DI ON.
- When TCM0 = TCM1 = 0, if it is in Tz mode, then the command is 0. Thus, if there is no need to use analog voltage as torque command, Tz mode is applicable and can avoid the problem of zero drift. If it is in T mode, the command will be the voltage deviation between T-REF and GND. Its input voltage range is -10V ~ +10V, which mean the corresponding torque is adjustable (P1-41).
- When neither TCM0 nor TCM1 is 0, parameters become the source of torque command. The command will be executed after TCM0 ~ TCM1 are changed. There is no need to use CTRG for triggering.

The torque command can be used in torque mode (T or Tz) and speed mode (S or Sz). When it is in speed mode, it can be regarded as the command input of torque limit.

6.4.2 Control Structure of Torque Mode

The basic control structure is as the following diagram:

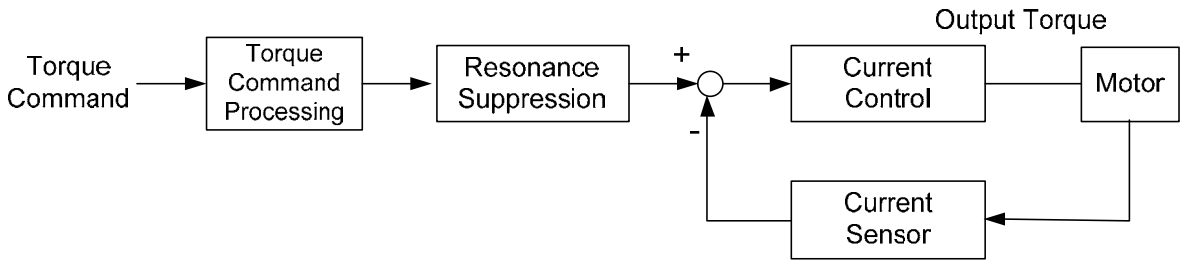

The toque command unit is to select torque command source according to Section 6.4.1, including the scaling (P1-41) setting and S-curve setting. The current control unit manages the gain parameters of the servo drive and calculates the current for servo motor in time. Since the current control unit is very complicated, and is not relevant to the application. There is no need to adjust parameters. Only command end setting is provided.

The structure of torque command unit is as the following diagram.

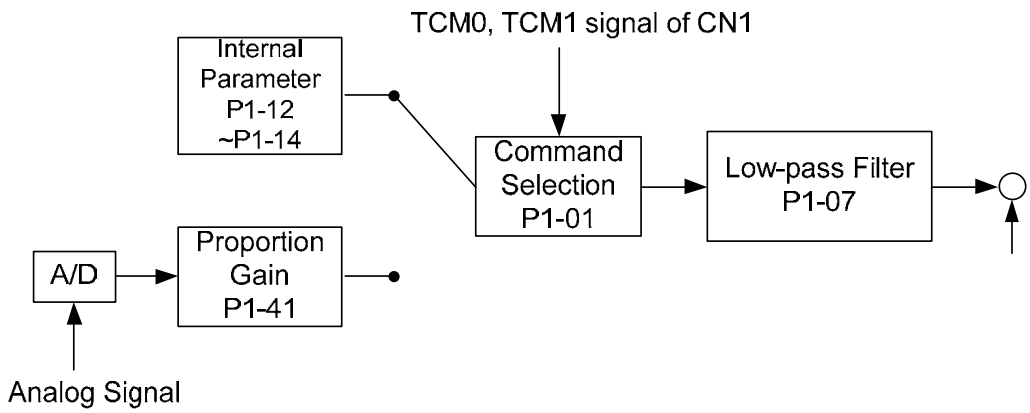

The upper path is the command from register while the lower one is external analog command. The command is selected according to the status of TCM0, TCM1 and P1-01 (T or Tz). The torque represented by analog voltage command can be adjusted via the scaling and can obtain a smoother response via low-pass filter.

6.4.3 Smooth Torque Mode

Related parameters:

P1-07	TFLT	Analog Torque Command (Low-pass Filter)		Address: 010EH 010FH
	Operation Interface:	Panel/Software	Communication	Related Section: Section 6.4.3
	Default:	0		
	Control Mode:	T		
	Unit:	ms		
	Range:	0 ~ 1000 (0: Disabled)		
	Data Size:	16-bit		
	Display Format:	Decimal		

Settings: 0: Disabled

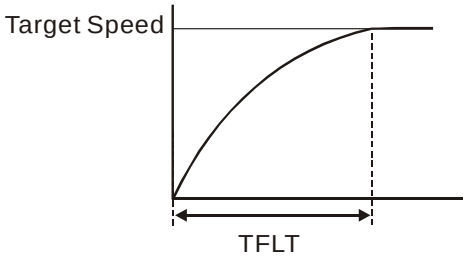

6.4.4 The Scaling of Analog Command

The motor torque command is controlled by the analog voltage deviation between T_REF and GND and goes with parameter P1-41 to adjust the torque slope and its range.

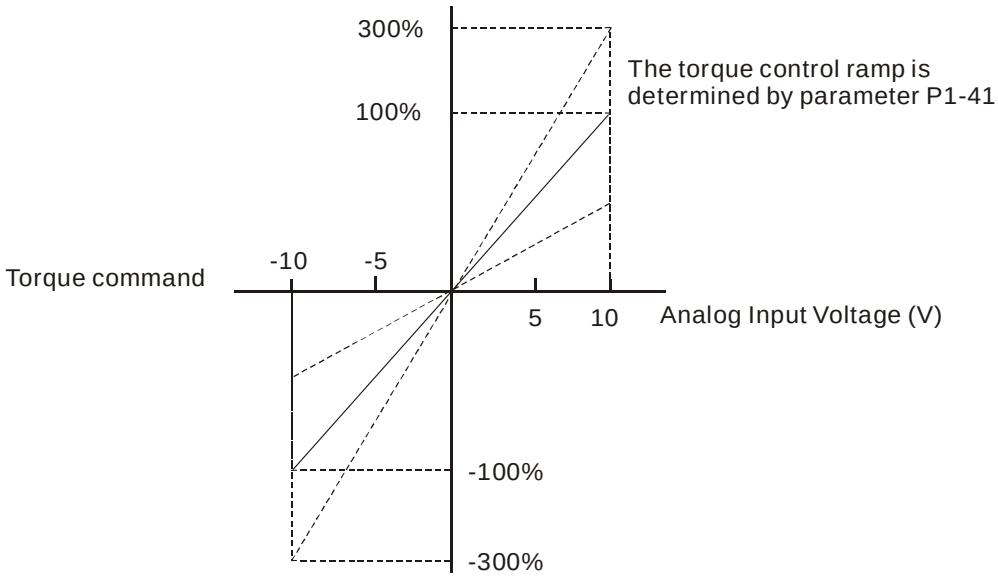

Relevant parameters:

P1-41▲	TCM	Max. Output of Analog Torque Command		Address: 0152H 0153H
	Operation Interface:	Panel/Software	Communication	Related Section: Section 6.4.4
	Default:	100		
	Control Mode:	ALL		
	Unit:	%		
	Range:	0 ~ 1000		
	Data Size:	16-bit		
	Display Format:	Decimal		

Settings: Maximum Output of Analog Torque Command:

In torque mode, the analog torque command inputs the torque setting of the max. voltage (10V). When the default setting is 100, if the external voltage inputs 10V, it means the torque control command is 100% rated torque. If the external voltage inputs 5V, then the torque control command is 50% rated torque.

Torque control command = input voltage value x setting value / 10 (%)

In speed, PT and PR mode, the analog torque limit inputs the torque limit setting of the max. voltage (10V).

Torque limit command = input voltage value x setting value / 10 (%)

6.4.5 Timing Diagram of Torque Mode

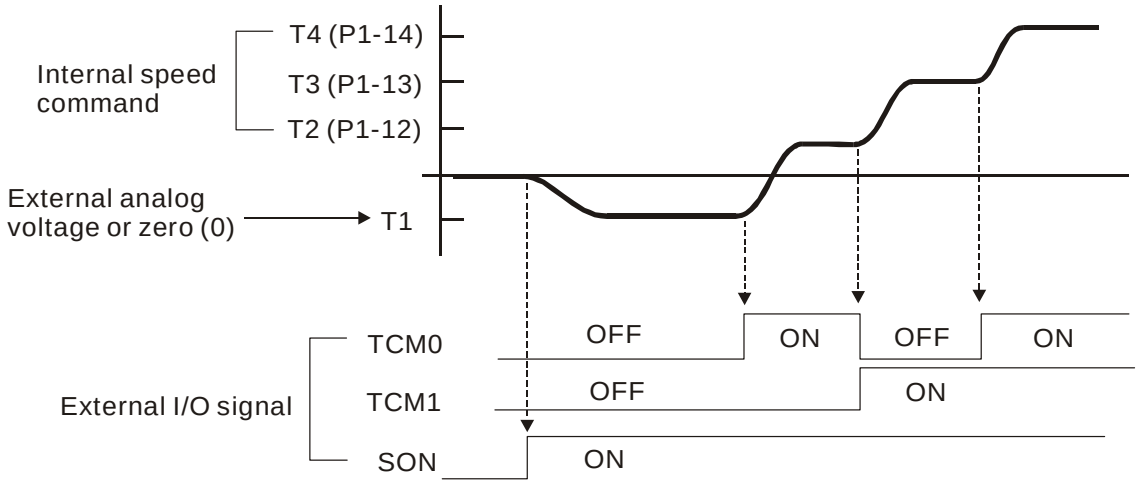

NOTE

1) OFF means the contact point is open while ON means the contact point is close.

2) When it is in Tz mode, the torque command T1 = 0; When it is in T mode, the torque command T1 is the external analog voltage input.

3) When the servo drive is Servo On, please select the command according to TCM0~TCM1 status.

6.5 Dual Modes

Apart from single mode, dual mode is also provided for operation. According to Section 6.1, dual modes are as followings:

1） Speed / Position dual mode (PT-S)

2） Speed / Torque dual mode (S-T)

3） Torque / Position dual mode (PT-T)

Mode Name	Short Name	Setting Code	Description
Dual Mode	PT-S	06	**PT** and **S** can be switched via **DI** signal, **S_P.**
	PT-T	07	**PT** and **T** can be switched via **DI** signal, **T_P**.
	S-T	0A	**S** and **T** can be switched via **DI** signal, **S_T**.

Sz and Tz dual mode is not provided here. For avoiding occupying too many digital inputs in dual mode, speed and torque mode can use external analog voltage as the command source so as to reduce digital input (SPD0, SPD1 or TCM0, TCM1). Please refer to Chapter 3.3.2, table 3.1, Default Value of DI Input Function and table 3.2, Default Value of DO Output Function for the default DI/DO of each mode.

The relationship between DI/DO signals and PIN define are set after the mode is selected. If users desire to change the setting, please refer to Chapter 3.3.4.

6.5.1 Speed / Position Dual Mode

The command source of PT-S mode is from external pulse. Speed command can be issued by the external analog voltage or internal parameters (P1-09 to P1-11). The switch of speed and position mode is controlled by the S-P signal. The timing diagram is shown as below:

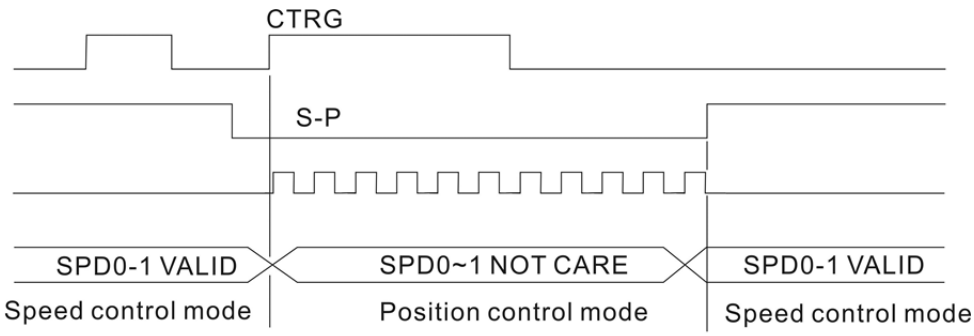

Figure 1. : Speed / Position Control Mode Selection

6.5.2 Speed / Torque Dual Mode

S-T is the only mode. The speed command comes from the external analog voltage and internal parameters (P1-09 ~P1-11), which is selected via SPD0~SPD1. Similarly, the source of torque command could be external analog voltage and internal parameters (P1-12 ~ P1-14) and is selected via TCM0~TCM1. The switch of speed/torque mode is controlled by S-T signal. The timing diagram is shown as below.

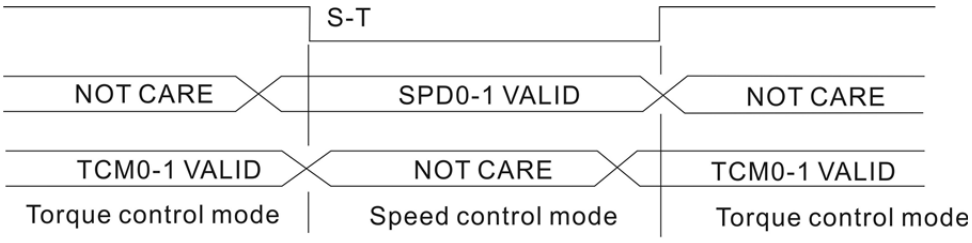

Figure 2. : Speed / Torque Control Mode Selection

In torque mode (S-T is ON), the torque command is selected via TCM0 and TCM1. When switching to speed mode (S-T is OFF), the torque command is selected via SPD0 and SPD 1. The motor operates according to the speed command. When S-T is ON, it goes back to the torque mode again. Please refer to the introduction of single mode for DI signal and the selected command of each mode.

6.5.3 Torque / Position Dual Mode

The command source of PT-T mode is from external pulse. Torque command can be issued by the external analog voltage or internal parameters (P1-12 to P1-14). The switch of torque and position mode is controlled by T-P signal.

The timing diagram is shown as below:

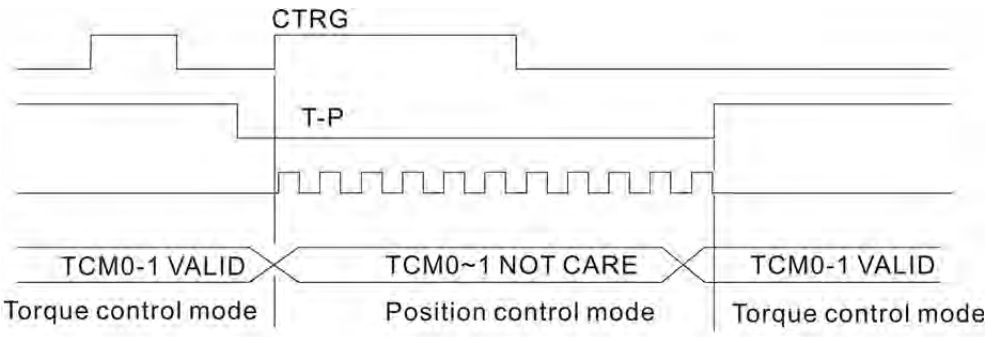

Figure 3. : Torque / Position Control Mode Selection

6.6 Others

6.6.1 The Use of Speed Limit

The maximum speed in each mode is limited by internal parameters (P1-55), not matter it is in position, speed or torque mode.

The issuing method of speed limit command and speed command is the same. The command source could be external analog voltage or internal parameter (P1-09 ~ P1-11). Please refer to Section 6.3.1 for descriptions.

Speed limit can be used in torque mode (T) only. It is used for limiting the motor speed. When the command in torque mode is issued by external analog voltage, DI signal is enough and can be regarded as SPD0~SPD1 which is used to determine the speed limit command (internal parameters). If the DI signal is not enough, speed limit command can be issued by analog voltage. When the function of disable/enable limit function in P1-02 is set to 1, the speed limit function is enabled. See the timing diagram as below.

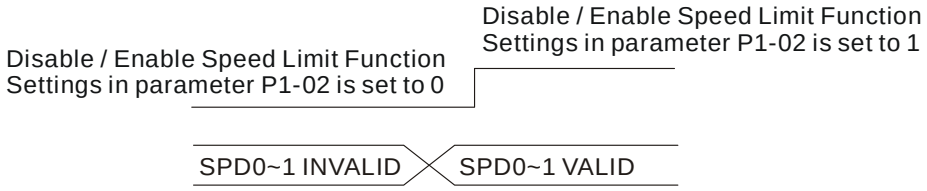

Command Source Selection of Speed Limit

6.6.2 The Use of Torque Limit

The issuing method of torque limit command and torque command is the same. The command source could be external analog voltage or internal parameter (P1-12 ~ P1-14). Please refer to Chapter 6.4.1 for descriptions.

Torque limit can be used in position mode (PT) or speed mode (S). It is used for limiting the motor torque output. When the command in position mode is issued by external analog voltage, DI signal is enough and can be regarded as TCM0~TCM1, which is used to determine torque limit command (internal parameters). If the DI signal is not enough, torque limit command can be issued by analog voltage. When the function of disable/enable torque limit function in P1-02 is set to 1, the torque limit function is enabled. See the timing diagram as below.

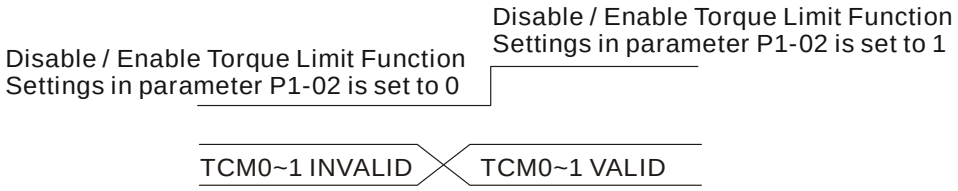

Command Source Selection of Torque Limit

6.6.3 Analog Monitor

Users could observe the needed voltage signal via analog monitor. Two analog channels are provided by the servo drive and locate in terminal 1 and 3 of CN5. The related parameter settings are as the followings.

P0-03	MON	Analog Monitor Output		Address: 0006H 0007H
	Operation Interface:	Panel/Software	Communication	Related Section: Section 6.6.3
	Default:	00		
	Control Mode:	ALL		
	Unit:	-		
	Range:	00 ~ 77		
	Data Size:	16-bit		
	Display Format:	Hexadecimal		

Settings:

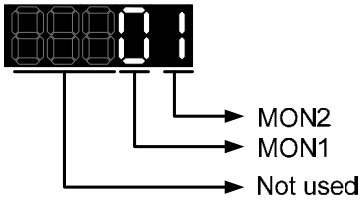

MON1, MON2 Setting Value	Description
0	Motor speed (+/-8 Volts/Max. speed)
1	Motor torque (+/-8 Volts/Max. torque)
2	Pulse command frequency (+8 Volts / 4.5Mpps)
3	Speed command (+/-8 Volts/ Max. speed command)
4	Torque command (+/-8 Volts/Max. torque command)
5	VBUS voltage (+/-8 Volts / 450V)
6	Reserved

NOTE Please refer to parameter P1-04, P1-05 for proportional setting of analog output voltage.

For example: P0-03 = 01 (MON1 is the analog output of motor speed; MON2 is the analog output of motor torque (force))

$$\text{MON1 output voltage} = 8 \times \frac{\text{Motor speed}}{(\text{Max. speed} \times \frac{\text{P1-04}}{100})} \text{ (unit : Volts)}$$

$$\text{MON2 output voltage} = 8 \times \frac{\text{Motor torque}}{(\text{Max. torque (force)} \times \frac{\text{P1-05}}{100})} \text{ (unit: Volts)}$$

P1-03	AOUT	Polarity Setting of Encoder Pulse Output		Address: 0106H 0107H
	Operation Interface:	Panel/Software	Communication	Related Section: Section 3.3.3
	Default:	0		
	Control Mode:	ALL		
	Unit:	-		
	Range:	0 ~ 13		
	Data Size:	16-bit		
	Display Format:	Hexadecimal		

Settings :

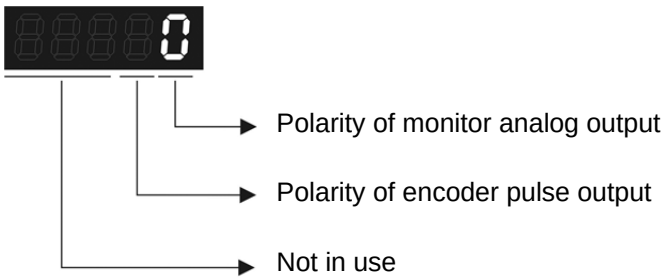

- Polarity of monitor analog output
  0: MON1 (+), MON2 (+)
  1: MON1 (+), MON2 (-)
  2: MON1 (-), MON2 (+)
  3: MON1 (-), MON2 (-)
- Polarity of encoder pulse output
  0: Forward output
  1: Reverse output

P1-04	MON1	Analog Monitor Output Proportion 1 (MON1)	Address: 0108H 0109H
Operation Interface:	Panel/Software	Communication	Related Section: Section 6.4.4
Default:	100		
Control Mode:	ALL		
Unit:	% (full scale)		
Range:	0 ~ 100		
Data Size:	16-bit		
Display Format:	Decimal		

Settings: Please refer to parameter P0-03 for the setting of analog output selection.

Example: P0-03 = 01 (MON1 is motor speed analog output, MON2 is motor torque analog output)

$$\text{MON1 output voltage} = 8 \times \frac{\text{Motor speed}}{\left(\text{Max. motor speed} \times \frac{\text{P1-04}}{100}\right)} \quad \text{(unit: Volts)}$$

$$\text{MON2 output voltage} = 8 \times \frac{\text{Motor toque}}{\left(\text{Max. motor torque} \times \frac{\text{P1-05}}{100}\right)} \quad \text{(unit: Volts)}$$

P1-05	MON2	MON2 Analog Monitor Output Proportion 2	Address: 010AH 010BH
Operation Interface:	Panel/Software	Communication	Related Section: Section 6.4.4
Default:	100		
Control Mode:	ALL		
Unit:	% (full scale)		
Range:	0 ~ 100		
Data Size:	16-bit		
Display Format:	Decimal		

Settings: Please refer to parameter P0-03 for the setting of analog output selection.

Example: P0-03 = 01 (MON1 is motor speed analog output,

MON2 is motor torque analog output)

$$\text{MON1 output voltage} = 8 \times \frac{\text{Motor speed}}{\left(\text{Max. motor speed} \times \frac{\text{P1-04}}{100}\right)} \quad \text{(unit: Volts)}$$

$$\text{MON2 output voltage} = 8 \times \frac{\text{Motor toque}}{\left(\text{Max. motor torque} \times \frac{\text{P1-05}}{100}\right)} \quad \text{(unit: Volts)}$$

P4-20	DOF1	Offset Adjustment Value of Analog Monitor Output (MON1)		Address: 0428H 0429H
	Operation Interface:	Panel / Software	Communication	Related Section: Section 6.4.4
	Default:	Factory setting		
	Control Mode:	ALL		
	Unit:	mV		
	Range:	-800 ~ 800		
	Data Size:	16-bit		
	Display Format:	Decimal		

Settings: Offset adjustment value (cannot reset)

P4-21	DOF2	Offset Adjustment Value of Analog Monitor Output (MON2)		Address: 042AH 042BH
	Operation Interface:	Panel / Software	Communication	Related Section: Section 6.4.4
	Default:	0		
	Control Mode:	ALL		
	Unit:	mV		
	Range:	-800 ~ 800		
	Data Size:	16-bit		
	Display Format:	Decimal		

Settings: Offset adjustment value (cannot reset)

For example, if users desire to observe the voltage signal in channel 1 and set this channel for observing the pulse command frequency, when the pulse command frequency 325 Kpps corresponds to 8V output voltage, users need to adjust the monitor output proportion of P1-04 to 50 (= 325 Kpps/ Max. input frequency). Other related settings include P0-03 (X= 3) and P1-03 (The polarity setting range of monitor analog output is between 0 and 3, and it can set positive/negative polarity output). Generally speaking, the output voltage of Ch1 is V_1; the pulse command frequency is (Max. input frequency $\times V_1/8$) $\times$P1-04/100.

Because of the offset value, the zero voltage level of analog monitor output does not match to the zero point of the setting. This can be improved via the setting of offset adjustment value of analog monitor output, DOF1 (4-20) and DOF2 (P4-21). The voltage level of analog monitor output is ±8V, if the output voltage exceeds the range, it will be limited within ±8V. The provided resolution is about 10bits, which equals to 13mV/LSB.

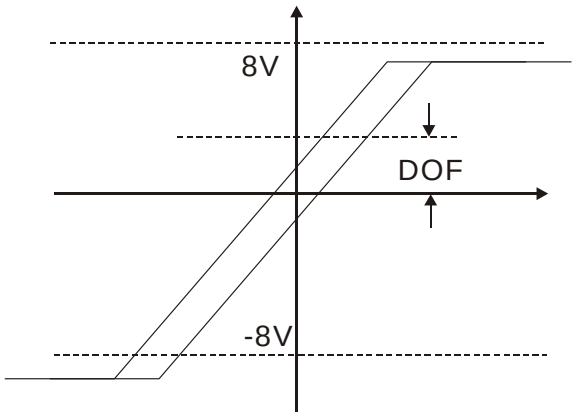

6.6.4 The Use of Brake

When operating brake via servo drive, if the DO signal, BRKR is set to OFF, it means the brake is not working and the motor will be locked. If BRKR is set to ON, it means the brake is working and the motor can operate. The operation of brake has two kinds. Users can set the relevant dealy via regiser MBT1 (P1-42) and MBT2 (P1-43). It is usually applied in Z axis in order to reduce the heat generated when servo motor puts up resistance and shorten its lifetime. In order to avoid the error of brake, it must be worked when the servo drive is off. To operate the brake, the brake has to be activated before the motor stops running (Servo OFF). The brake has to be released after Servo ON. Otherwise, it would become the loading of the motor and might damage the brake.

If it works during the process of acceleration or constant speed, the servo drive needs to generate more current to resist the brakeforce of brake and it might cause the alarm of overload warning.

Timing diagram of brake control:

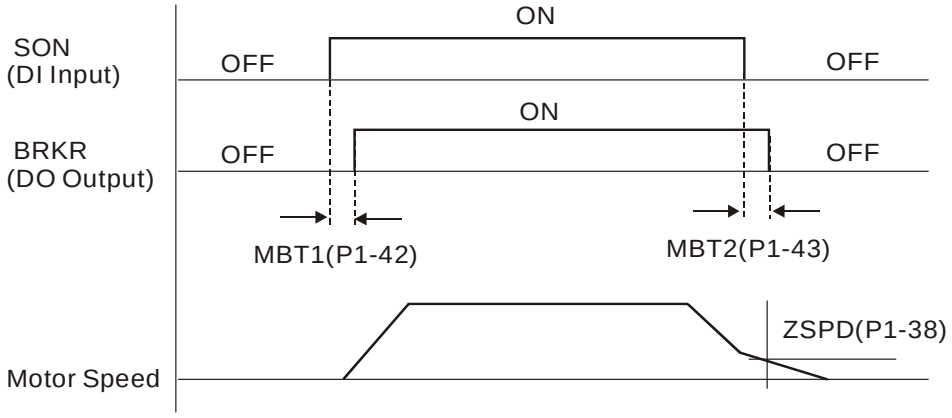

The output timing of BRKR:

1. When Servo OFF, go through the time set by P1-43 and the motor speed is faster than the setting in P1-38, DO.BRKR is OFF (the brake is locked).
2. When Servo Off, has not reached the time set by P1-43 but the motor speed is slower than the setting in P1-38, DO.BRKR is OFF (the brake is locked.).

The wiring diagram of using mechanical brake:

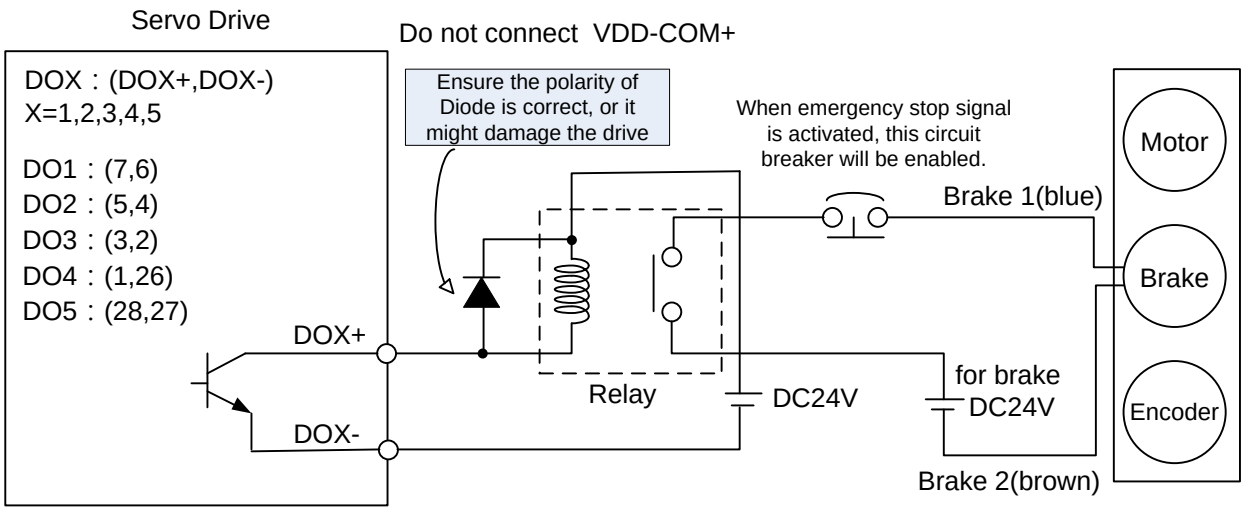

NOTE

1) Please refer to Chapter 3, Wiring.

2) The brake signal controls the solenoid valve, provides power to the brake and enables the brake.

3) Please note that there is no polarity in coil brake.

4) Do not use brake power and control power (VDD) at the same time.

Timing diagram of control power and main power:

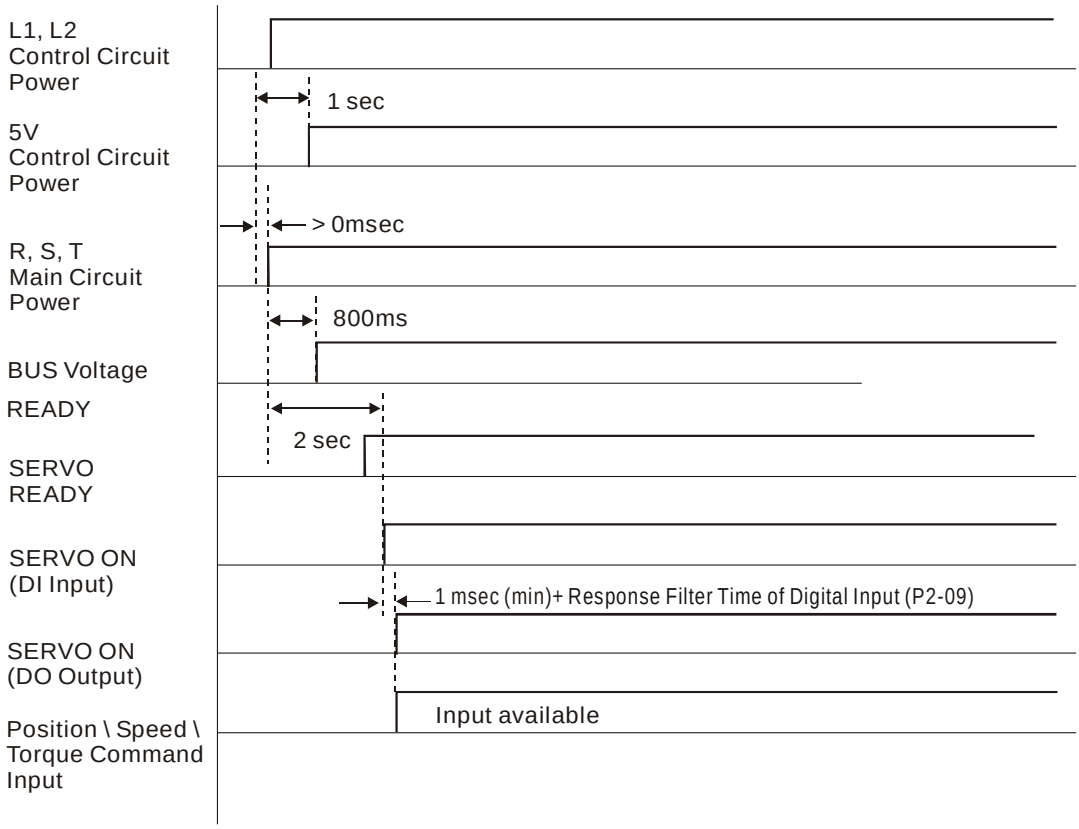

Chapter 7 Parameters

7.1 Parameter Definition

Parameters are divided into five groups which are shown as follows. The first character after the start code P is the group character and the second character is the parameter character.

As for the communication address, it is the combination of group number along with two digit number in hexadecimal. The definition of parameter groups is as the followings:

Group 0: Monitor parameters	(example: P0-xx)
Group 1: Basic parameters	(example: P1-xx)
Group 2: Extension parameters	(example: P2-xx)
Group 3: Communication parameters	(example: P3-xx)
Group 4: Diagnosis parameters	(example: P4-xx)

Abbreviation of control modes:

PT: Position control mode (command from external signal)
S: Speed control mode
T: Torque control mode

Explanation of symbols (marked after parameter)

(★) Read-only register, such as P0-00, P0-01, P4-00.
(▲) Setting is invalid when Servo On, such as P1-00, P1-46 and P2-33.
(●) Not effective until re-power on or off the servo drive, such as P1-01 and P3-00.
(■) Volatile parameters, such as P2-31 and P3-06.

7.2 Lists of Parameters

Monitor and General Output Parameter								
Parameter	Abbr.	Funciton	Default	Unit	Control Mode			Related Section
					PT	S	T	
P0-00★	VER	Firmware Version	Factory Setting	N/A	O	O	O	-
P0-01■	ALE	Alarm Code Display of Drive (Seven-segment Display)	N/A	N/A	O	O	O	11.1 11.2 11.3
P0-02	STS	Drive Status	00	N/A	O	O	O	7.2
P0-03	MON	Analog Output Monitor	01	N/A	O	O	O	-
P0-08★	TSON	Servo On Time	0	Hour				-
P0-09★	CM1	Status Monitor Register 1	N/A	N/A	O	O	O	4.3.5
P0-10★	CM2	Status Monitor Register 2	N/A	N/A	O	O	O	4.3.5
P0-11★	CM3	Status Monitor Register 3	N/A	N/A	O	O	O	4.3.5
P0-12★	CM4	Status Monitor Register 4	N/A	N/A	O	O	O	4.3.5
P0-13★	CM5	Status Monitor Register 5	N/A	N/A	O	O	O	4.3.5
P0-17	CM1A	Status Monitor Register 1 Selection	0	N/A				-
P0-18	CM2A	Status Monitor Register 2 Selection	0	N/A				-
P0-19	CM3A	Status Monitor Register 3 Selection	0	N/A				-
P0-20	CM4A	Status Monitor Register 4 Selection	0	N/A				-
P0-21	CM5A	Status Monitor Register 5 Selection	0	N/A				-
P0-46★	SVSTS	Servo Digital Output Status Display	0	N/A	O	O	O	-
P1-04	MON1	MON1 Analog Monitor Output Proportion	100	% (full scale)	O	O	O	6.4.4
P1-05	MON2	MON2 Analog Monitor Output Proportion	100	% (full scale)	O	O	O	6.4.4

(★) Read-only register, e.g. parameter P0-00, P0-10 and P4-00, etc.
(▲) Setting is invalid when Servo On, e.g. parameter P1-00, P1-46 and P2-33, etc.
(●) Not effective until re-power on or off the servo drive, e.g. parameter P1-01 and P3-00.
(■) Volatile parameters, e.g. parameter P2-30 and P3-06.

Filter and Resonance Suppression								
Parameter	Abbr.	Function	Default	Unit	Control Mode			Related Section
					PT	S	T	
P1-06	SFLT	Analog Speed Command (Low-pass Filter)	0	ms		O		6.3.3
P1-07	TFLT	Analog Torque Command (Low-pass Filter)	0	ms			O	6.4.3
P1-08	PFLT	Smooth Constant of Position Command (Low-pass Filter)	0	10ms	O			6.2.4
P1-34	TACC	Acceleration Constant of S-Curve	200	ms		O		6.3.3
P1-35	TDEC	Deceleration Constant of S-Curve	200	ms		O		6.3.3
P1-36	TSL	Acceleration / Deceleration Constant of S-Curve	0	ms		O		6.3.3
P1-59	MFLT	Analog Speed Command	0	0.1ms		O		-
P1-62	FRCL	Friction Compensation	0	%	O	O	O	-
P1-63	FRCT	Friction Compensation	0	ms	O	O	O	-
P1-68	PFLT2	Position Command Moving Filter	0	ms	O			-
P2-23	NCF1	Resonance suppression (Notch filter) (1)	1000	Hz	O	O	O	6.3.7
P2-24	DPH1	Resonance Suppression (Notch filter) Attenuation Rate (1)	0	dB	O	O	O	6.3.7
P2-43	NCF2	Resonance suppression (Notch filter) (2)	1000	Hz	O	O	O	6.3.7
P2-44	DPH2	Resonance Suppression (Notch filter) Attenuation Rate (2)	0	dB	O	O	O	6.3.7
P2-45	NCF3	Resonance suppression (Notch filter) (3)	1000	Hz	O	O	O	6.3.7
P2-46	DPH3	Resonance Suppression (Notch filter) Attenuation Rate (3)	0	dB	O	O	O	6.3.7
P2-47	ANCF	Auto Resonance Suppression Mode Setting	1	N/A	O	O	O	-
P2-48	ANCL	Resonance Suppression Detection Level	100	N/A	O	O	O	-
P2-25	NLP	Low-pass Filter of Resonance Suppression	2 or 5	0.1ms	O	O	O	6.3.7
P2-49	SJIT	Speed Detection Filter	0	sec	O	O	O	-

(★) Read-only register, e.g. parameter P0-00, P0-10 and P4-00, etc.
(▲) Setting is invalid when Servo On, e.g. parameter P1-00, P1-46 and P2-33, etc.
(●) Not effective until re-power on or off the servo drive, e.g. parameter P1-01 and P3-00.
(■) Volatile parameters, e.g. parameter P2-30 and P3-06.

Gain and Switch Parameter								
Parameter	Abbr.	Function	Default	Unit	Control Mode			Related Section
					PT	S	T	
P2-00	KPP	Position Loop Gain	35	rad/s	O			6.2.5
P2-01	PPR	Switching Rate of Position Loop Gain	100	%	O			6.2.5
P2-02	PFG	Position Feed Forward Gain	50	%	O			6.2.5
P2-03	PFF	Smooth Constant of Position Feed Forward Gain	5	ms	O			-
P2-04	KVP	Speed Loop Gain	500	rad/s	O	O	O	6.3.6
P2-05	SPR	Switching Rate of Speed Loop Gain	100	%	O	O	O	-
P2-06	KVI	Speed Integral Compensation	100	rad/s	O	O	O	6.3.6
P2-07	KVF	Speed Feed Forward Gain	0	%	O	O	O	6.3.6
P2-26	DST	Anti-interference Gain	0	0.001	O	O	O	-
P2-27	GCC	Gain Switching and Switching Selection	0	N/A	O	O	O	-
P2-28	GUT	Gain Switching Time Constant	10	10ms	O	O	O	-
P2-29	GPE	Gain Switching	1280000	pulse Kpps r/min	O	O	O	-
P2-31	AUT1	Speed Loop Frequency Response Setting in Auto and Semi-auto Mode	80	Hz	O	O	O	5.6 6.3.6
P2-32▲	AUT2	Tuning Mode Selection	0	N/A	O	O	O	5.6 6.3.6

(★) Read-only register, e.g. parameter P0-00, P0-10 and P4-00, etc.
(▲) Setting is invalid when Servo On, e.g. parameter P1-00, P1-46 and P2-33, etc.
(●) Not effective until re-power on or off the servo drive, e.g. parameter P1-01 and P3-00.
(■) Volatile parameters, e.g. parameter P2-30 and P3-06.

Position Control Parameter								
Parameter	Abbr.	Function	Default	Unit	Control Mode			Related Section
					PT	S	T	
P1-01●	CTL	Input Setting of Control Mode and Control Command	0	pulse r/min N-M	O	O	O	6.1
P1-02▲	PSTL	Speed and Torque Limit Setting	0	N/A	O	O	O	6.6
P1-12 ~ P1-14	TQ1 ~ 3	Internal Torque Limit 1 ~ 3	100	%	O	O	O	6.4.1
P1-46▲	GR3	Pulse Number of Encoder Output	2500	pulse	O	O	O	-
P1-55	MSPD	Maximum Speed Setting	rated	r/min	O	O	O	-
P2-50	DCLR	Pulse Clear Mode	0	N/A	O			-
External Pulse Control Command (PT mode)								
P1-00▲	PTT	External Pulse Input Type	0x2	N/A	O			6.2.1
P1-44▲	GR1	Gear Ratio (Numerator) (N1)	1	pulse	O			6.2.3
P1-45▲	GR2	Gear Ratio (Denominator) (M)	1	pulse	O			6.2.3
P2-60▲	GR4	Gear Ratio (Numerator) (N2)	1	pulse	O			-
P2-61▲	GR5	Gear Ratio (Numerator) (N3)	1	pulse	O			-
P2-62▲	GR6	Gear Ratio (Numerator) (N4)	1	pulse	O			-

(★) Read-only register, e.g. parameter P0-00, P0-10 and P4-00, etc.
(▲) Setting is invalid when Servo On, e.g. parameter P1-00, P1-46 and P2-33, etc.
(●) Not effective until re-power on or off the servo drive, e.g. parameter P1-01 and P3-00.
(■) Volatile parameters, e.g. parameter P2-30 and P3-06.

Speed Control Parameter								
Parameter	Abbr.	Function	Default	Unit	Control Mode			Related Section
					PT	S	T	
P1-01●	CTL	Input Setting of Control Mode and Control Command	0	pulse r/min N-M	O	O	O	6.1
P1-02▲	PSTL	Speed and Torque Limit Setting	0	N/A	O	O	O	6.6
P1-46▲	GR3	Output Pulse Counts Per One Motor Revolution	1	pulse	O	O	O	-
P1-55	MSPD	Maximum Speed Limit	rated	r/min	O	O	O	-
P1-09 ~ P1-11	SP1 ~ 3	Internal Speed Command 1 ~ 3	1000 ~ 3000	0.1 r/min		O	O	6.3.1
P1-12 ~ P1-14	TQ1 ~ 3	Internal Torque Limit 1 ~ 3	100	%	O	O	O	6.6.2
P1-40▲	VCM	Maximum Speed of Analog Speed Command	rated	r/min		O	O	6.3.4
P1-41▲	TCM	Maximum Output of Analog Torque Speed	100	%	O	O	O	-
P1-76	AMSPD	Maximum Rotation Setting of Encoder Setting (OA, OB)	5500	r/min	O	O	O	-

(★) Read-only register, e.g. parameter P0-00, P0-10 and P4-00, etc.
(▲) Setting is invalid when Servo On, e.g. parameter P1-00, P1-46 and P2-33, etc.
(●) Not effective until re-power on or off the servo drive, e.g. parameter P1-01 and P3-00.
(■) Volatile parameters, e.g. parameter P2-30 and P3-06.

Torque Control Parameter								
Parameter	Abbr.	Function	Default	Unit	Control Mode			Related Section
					PT	S	T	
P1-01●	CTL	Input Setting of Control Mode and Control Command	0	pulse r/min N-M	O	O	O	6.1
P1-02▲	PSTL	Speed and Torque Limit Setting	0	N/A	O	O	O	6.6
P1-46▲	GR3	Output Pulse Counts Per One Motor Revolution	1	pulse	O	O	O	-
P1-55	MSPD	Maximum Speed Limit	rated	r/min	O	O	O	-
P1-09 ~ P1-11	SP1~3	Internal Speed Limit 1~3	1000 ~ 3000	r/min		O	O	6.6.1
P1-12 ~ P1-14	TQ1~3	Internal Torque Command 1~3	100	%	O	O	O	6.4.1
P1-40▲	VCM	Maximum Speed of Analog Speed Command	rated	r/min		O	O	-
P1-41▲	TCM	Maximum Output of Analog Torque Limit	100	%	O	O	O	6.4.4

(★) Read-only register, e.g. parameter P0-00, P0-10 and P4-00, etc.
(▲) Setting is invalid when Servo On, e.g. parameter P1-00, P1-46 and P2-33, etc.
(●) Not effective until re-power on or off the servo drive, e.g. parameter P1-01 and P3-00.
(■) Volatile parameters, e.g. parameter P2-30 and P3-06.

Planning of Digital Input / Output and Output Setting Parameter								
Parameter	Abbr.	Function	Default	Unit	Control Mode			Related Section
					PT	S	T	
P2-09	DRT	DI Debouncing Time	2	2ms	O	O	O	-
P2-10	DI1	DI1 Functional Planning	101	N/A	O	O	O	Table 7.1
P2-11	DI2	DI2 Functional Planning	104	N/A	O	O	O	Table 7.1
P2-12	DI3	DI3 Functional Planning	116	N/A	O	O	O	Table 7.1
P2-13	DI4	DI4 Functional Planning	117	N/A	O	O	O	Table 7.1
P2-14	DI5	DI5 Functional Planning	102	N/A	O	O	O	Table 7.1
P2-15	DI6	DI6 Functional Planning	22	N/A	O	O	O	Table 7.1
P2-16	DI7	DI7 Functional Planning	23	N/A	O	O	O	Table 7.1
P2-17	DI8	DI8 Functional Planning	21	N/A	O	O	O	Table 7.1
P2-36	DI9	DI9 Functional Planning	0	N/A	O	O	O	Table 7.1
P2-18	DO1	DO1 Functional Planning	101	N/A	O	O	O	Table 7.2
P2-19	DO2	DO2 Functional Planning	103	N/A	O	O	O	Table 7.2
P2-20	DO3	DO3 Functional Planning	109	N/A	O	O	O	Table 7.2
P2-21	DO4	DO4 Functional Planning	105	N/A	O	O	O	Table 7.2
P2-22	DO5	DO5 Functional Planning	7	N/A	O	O	O	Table 7.2
P2-37	DO6	DO6 Functional Planning	7	N/A	O	O	O	Table 7.2
P1-38	ZSPD	Zero Speed Range Setting	100	0.1 r/min	O	O	O	Table 7.2
P1-39	SSPD	Target Motor Detection Level	3000	r/min	O	O	O	Table 7.2
P1-42	MBT1	Enable Delay Time of Brake	0	ms	O	O	O	6.5.5
P1-43	MBT2	Disable Delay Time of Brake	0	ms	O	O	O	6.5.5
P1-47	SCPD	Speed Reached (DO：SP_OK) Range	10	r/min		O		Table 7.2

P1-54	PER	Position Completed Range	12800	pulse	O			Table 7.2
P1-56	OVW	Output Overload Warning Level	120	%	O	O	O	Table 7.2

(★) Read-only register, e.g. parameter P0-00, P0-10 and P4-00, etc.
(▲) Setting is invalid when Servo On, e.g. parameter P1-00, P1-46 and P2-33, etc.
(●) Not effective until re-power on or off the servo drive, e.g. parameter P1-01 and P3-00.
(■) Volatile parameters, e.g. parameter P2-30 and P3-06.

Communication Parameter								
Parameter	Abbr.	Function	Default	Unit	Control Mode			Related Section
					PT	S	T	
P3-00●	ADR	Address Setting	0x7F	N/A	O	O	O	8.2
P3-01	BRT	Transmission Speed	0x0203	bps	O	O	O	8.2
P3-02	PTL	Communication Protocol	6	N/A	O	O	O	8.2
P3-03	FLT	Communication Error Disposal	0	N/A	O	O	O	8.2
P3-04	CWD	Communication Time Out	0	sec	O	O	O	8.2
P3-05	CMM	Communication Mechanism	0	N/A	O	O	O	8.2
P3-06■	SDI	Control Switch of Digital Input (DI)	0	N/A	O	O	O	8.2
P3-07	CDT	Communication Response Delay Time	0	1ms	O	O	O	8.2
P3-08	MNS	Monitor Mode	0000	N/A	O	O	O	8.2

(★) Read-only register, e.g. parameter P0-00, P0-10 and P4-00, etc.
(▲) Setting is invalid when Servo On, e.g. parameter P1-00, P1-46 and P2-33, etc.
(●) Not effective until re-power on or off the servo drive, e.g. parameter P1-01 and P3-00.
(■) Volatile parameters, e.g. parameter P2-30 and P3-06.

Diagnosis Parameter								
Parameter	Abbr.	Function	Default	Unit	Control Mode			Related Section
					PT	S	T	
P4-00★	ASH1	Fault Record (N)	0	N/A	O	O	O	4.4.1
P4-01★	ASH2	Fault Record (N-1)	0	N/A	O	O	O	4.4.1
P4-02★	ASH3	Fault Record (N-2)	0	N/A	O	O	O	4.4.1
P4-03★	ASH4	Fault Record (N-3)	0	N/A	O	O	O	4.4.1
P4-04★	ASH5	Fault Record (N-4)	0	N/A	O	O	O	4.4.1
P4-05	JOG	Servo Motor Jog Control	20	r/min	O	O	O	4.4.2
P4-06▲■	FOT	Digital Output Register	0	N/A	O	O	O	4.4.4
P4-07	ITST	Multi-function of Digital Input	0	N/A	O	O	O	4.4.5 8.2
P4-08★	PKEY	Input Status of the Drive Panel	N/A	N/A	O	O	O	-
P4-09★	MOT	Digital Output Status	N/A	N/A	O	O	O	4.4.6
P4-10▲	CEN	Adjustment Selection	0	N/A	O	O	O	-
P4-11	SOF1	Analog Speed Input Offset Adjustment 1	Factory Setting	N/A	O	O	O	-
P4-12	SOF2	Analog Speed Input Offset Adjustment 2	Factory Setting	N/A	O	O	O	-
P4-14	TOF2	Analog Torque Input Offset Adjustment 1	Factory Setting	N/A	O	O	O	-
P4-15	COF1	Analog Torque Input Offset Adjustment 2	Factory Setting	N/A	O	O	O	-
P4-16	COF2	Current Detector (V1 Phase) Offset Adjustment	Factory Setting	N/A	O	O	O	-
P4-17	COF3	Current Detector (V2 Phase) Offset Adjustment	Factory Setting	N/A	O	O	O	-
P4-18	COF4	Current Detector (W1 Phase) Offset Adjustment	Factory Setting	N/A	O	O	O	-
P4-19	TIGB	IGBT NTC Adjustment Detection Level	Factory Setting	N/A	O	O	O	-
P4-20	DOF1	Offset Adjustment Value of Analog Monitor Output (MON1)	0	mV	O	O	O	6.4.4
P4-21	DOF2	Offset Adjustment Value of Analog Monitor Output (MON2)	0	mV	O	O	O	6.4.4
P4-22	SAO	Analog Speed Input Offset	0	mV		O		-
P4-23	TAO	Analog Torque Input Offset	0	mV			O	-

(★) Read-only register, e.g. parameter P0-00, P0-10 and P4-00, etc.
(▲) Setting is invalid when Servo On, e.g. parameter P1-00, P1-46 and P2-33, etc.
(●) Not effective until re-power on or off the servo drive, e.g. parameter P1-01 and P3-00.
(■) Volatile parameters, e.g. parameter P2-30 and P3-06.

7.3 Parameter Description

P0-xx Monitor Parameters

P0-00★	VER	Firmware Version		Address: 0000H 0001H
	Operation Interface:	Panel/Software	Communication	Related Section: N/A
	Default:	Factory setting		
	Control Mode:	ALL		
	Unit:	-		
	Range:	-		
	Data Size:	16-bit		
	Format:	Decimal		

Settings: This parameter only shows the firmware version of the servo drive.

P0-01■	ALE	Alarm Code Display of Drive (Seven-segment Display)		Address: 0002H 0003H
	Operation Interface:	Panel/Software	Communication	Related Section: 11.1, 11.2, 11.3
	Default:	-		
	Control Mode:	ALL		
	Unit:	-		
	Range:	0 ~ 0 It only can be set to 0 to clear the alarm (Same as DI.ARST).		
	Data Size:	16-bit		
	Format:	BCD		

Settings: Hexadecimal format: displays the alarm code

The alarm code is hexadecimal data but displayed in BCD format.

Alarm of Servo Drive

001: Over current

002: Over voltage

003: Under voltage (In default setting, the alarm occurs only when the voltage is not enough in Servo ON status; In Servo ON status, when it applies to power R, S, T, the alarm still will not be cleared. Please refer to P2-66.)

004: Motor combination error (The drive corresponds to the wrong motor)

005: Regeneration error

006: Overload

007: Over speed

008: Abnormal pulse command
009: Excessive deviation of position command
010: Reserved
011: Encoder error (The servo drive cannot connect to the encoder because of disconnection or abnormal wiring)
012: Adjustment error
013: Emergency stop
014: Reverse limit error
015: Forward limit error
016: IGBT overheat
017: Abnormal EEPROM
018: Abnormal signal output
019: Serial communication error
020: Serial communication time out
021: Reserved
022: Main circuit power lack phase
023: Early warning for overload
024: Encoder initial magnetic field error
025: The internal of the encoder is in error
026: Unreliable internal data of the encoder
027: The internal of the encoder is in error
028: The internal of the encoder is in error
029: The internal of the encoder is in error
030: Motor crash error
031: Incorrect wiring of the motor power line, U, V, W, GND
035: Encoder temperature exceeds the protective range
048: Excessive encoder output error
067: Encoder temperature warning
083: Servo drive outputs excessive current
085: Regeneration error
099: DSP firmware upgrade
555: System failure
880: System failure

P0-02	STS	Drive Status		Address: 0004H 0005H
	Operation Interface:	Panel/Software	Communication	Related Section: Table 7.2
	Default:	00		
	Control Mode:	ALL		
	Unit:	-		
	Range:	0 ~ 18		

Data Size:	16-bit
Format:	Decimal

Settings: 00: Motor feedback pulse number (after the scaling of electronic gear ratio) [user unit]

01: Input pulse number of pulse command (after the scaling of electronic gear ratio) [user unit]

02: Deviation between control command pulse and feedback pulse number [user unit]

03:The number of motor feedback pulse (encoder unit, 160000 pulse/rev) [pulse]

04: Input pulse number of pulse command (before the scaling of electronic gear ratio) [pulse]

05: Position error counts [pulse]

06: Input frequency of pulse command [Kpps]

07: Motor speed [r/min]

08: Speed command input [Volt]

09: Speed command input [r/min]

10: Torque command input [Volt]

11: Torque command input [%]

12: Average load [%]

13: Peak load [%]

14: Main circuit voltage [Volt]

15: Motor inertia rattio [0.1times]

16: IGBT temperature

17: The frequency of resonance suppression[Hz]

18: The distance from the current position to Z. The range of the value is between -5000 and +5000.

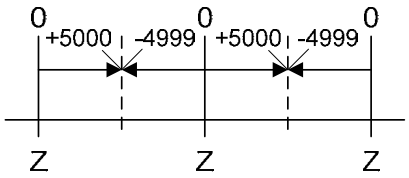

The interval of two Z-phase pulse command is 10000 pulse.

112: Communication quality

Fault Rate of Communication	Communication Quality
Communication error occurs for 7-9 times consecutively	3 (inferior)
Communication error occurs for 5-6 times consecutively	2 (poor)
Communication error occurs for 3-4 times consecutively	1 (medium)
Communication error occurs less than 2 times consecutively	0 (good)

P0-03	MON	Analog Monitor Output		Address: 0006H 0007H
	Operation Interface:	Panel/Software	Communication	Related Section: 6.6.3
	Default:	00		
	Control Mode:	ALL		
	Unit:	-		
	Range:	00 ~ 77		
	Data Size:	16-bit		
	Format:	Hexadecimal		

Settings:

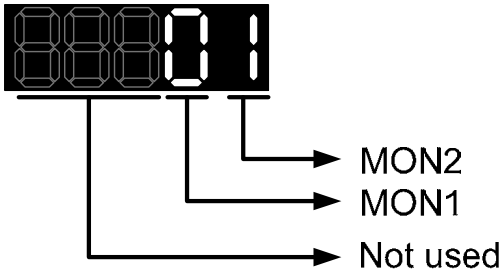

MON1, MON2 Setting Value	Description
0	Motor speed (+/-8 Volts/Max. speed)
1	Motor torque (+/-8 Volts/Max. torque)
2	Pulse command frequency (+8 Volts / 4.5Mpps)
3	Speed command (+/-8 Volts/ Max. speed command)
4	Torque command (+/-8 Volts/Max. torque command)
5	VBUS voltage (+/-8 Volts / 450V)
6	Reserved
7	Reserved

NOTE Please refer to parameter P1-04, P1-05 for proportional setting of analog output voltage.

For example: P0-03 = 01 (MON1 is the analog output of motor speed; MON2 is the analog output of motor torque)

$$\text{MON1 output voltage} = 8 \times \frac{\text{Motor speed}}{(\text{Max. speed} \times \frac{\text{P1-04}}{100})} \text{ (unit : Volts)}$$

$$\text{MON2 output voltage} = 8 \times \frac{\text{Motor torque}}{(\text{Max. torque} \times \frac{\text{P1-05}}{100})} \text{ (unit: Volts)}$$

P0-04■	Reserved	Address: 0008H 0009H

P0-05■	Reserved	Address: 000AH 000BH

P0-06■	Reserved	Address: 000CH 000DH

P0-07■	Reserved	Address: 000EH 000FH

P0-08★	TSON	Servo Startup Time	Address: 0010H 0011H

Operation Interface:	Panel/Software	Communication	Related Section: N/A
Default:	0		
Control Mode:	-		
Unit:	Hour		
Range:	High Word: 0 ~ 65535		
	Low Word: 0 ~ 65535		
Data Size:	16-bit		
Format:	Decimal		

Settings: High Word: Servo enable time

Low Word: Servo power on time

P0-09★	CM1	Status Monitor Register 1	Address: 0012H 0013H

Operation Interface:	Panel/Software	Communication	Related Section: 4.3.5
Default:	-		
Control Mode:	ALL		
Unit:	-		
Range:	-		
Data Size:	32-bit		
Format:	Decimal		

Settings: The setting value which is set by P0-17 should be monitored via P0-09.

For example, if P0-17 is set to 3, when accessing P0-09, it obtains the total feedback pulse number of motor encoder. For MODBUS communication, two 16bit data, 0012H and 0013H will be read as a 32bit data; (0013H : 0012H) = (Hi-word : Low-word). Set P0-02 to 23, the panel displays **VAR-1** first, and then shows the content of P0-09.

P0-10★	CM2	Status Monitor Register 2		Address: 0014H 0015H
	Operation Interface:	Panel/Software	Communication	Related Section: 4.3.5
	Default:	-		
	Control Mode:	ALL		
	Unit:	-		
	Range:	-		
	Data Size:	32-bit		
	Format:	Decimal		

Settings: The setting value which is set by P0-18 should be monitored via P0-10. Set P0-02 to 24, the panel displays **VAR-2** first, and then shows the content of P0-10.

P0-11★	CM3	Status Monitor Register 3		Address: 0016H 0017H
	Operation Interface:	Panel/Software	Communication	Related Section: 4.3.5
	Default:	-		
	Control Mode:	ALL		
	Unit:	-		
	Range:	-		
	Data Size:	32-bit		
	Format:	Decimal		

Settings: The setting value which is set by P0-19 should be monitored via P0-11. Set P0-02 to 25, the panel displays **VAR-3** first, and then shows the content of P0-11.

P0-12★	CM4	Status Monitor Register 4		Address: 0018H 0019H
	Operation Interface:	Panel/Software	Communication	Related Section: 4.3.5
	Default:	-		
	Control Mode:	ALL		
	Unit:	-		
	Range:	-		
	Data Size:	32-bit		
	Format:	Decimal		

Settings: The setting value which is set by P0-20 should be monitored via P0-12. Set P0-02 to 26, the panel displays **VAR-4** first, and then shows the content of P0-12.

P0-13★	CM5	Status Monitor Register 5		Address: 001AH 001BH
	Operation Interface:	Panel/Software	Communication	Related Section: 4.3.5
	Default:	-		
	Control Mode:	ALL		
	Unit:	-		
	Range:	-		
	Data Size:	32-bit		
	Format:	Decimal		

Settings: The setting value which is set by P0-21 should be monitored via P0-13.

P0-14	Reserved	Address: 001CH 001DH

P0-15	Reserved	Address: 001EH 001FH

P0-16	Reserved	Address: 0020H 0021H

P0-17	CM1A	Status Monitor Register 1 Selection		Address: 0022H 0023H
	Operation Interface:	Panel/Software	Communication	Related Section: N/A
	Default:	0		
	Control Mode:	-		
	Unit:	-		
	Range:	0 ~ 18		
	Data Size:	16-bit		
	Format:	Decimal		

Settings: Please refer to P0-02 for its setting value.

For example:

If P0-17 is set to 07, then reading P0-09 means reading「Motor speed (r/min) 」.

P0-18	CM2A	Status Monitor Register 2 Selection		Address: 0024H 0025H
	Operation Interface:	Panel/Software	Communication	Related Section: N/A
	Default:	0		
	Control Mode:	-		
	Unit:	-		
	Range:	0 ~ 18		

Data Size:	16-bit
Format:	Decimal

Settings: Please refer to P0-02 for its setting value.

P0-19	CM3A	Status Monitor Register 3 Selection	Address: 0026H 0027H

Operation Interface:	Panel/Software	Communication	Related Section: N/A
Default:	0		
Control Mode:	-		
Unit:	-		
Range:	0 ~ 18		
Data Size:	16-bit		
Format:	Decimal		

Settings: Please refer to P0-02 for its setting value.

P0-20	CM4A	Status Monitor Register 4 Selection	Address: 0028H 0029H

Operation Interface:	Panel/Software	Communication	Related Section: N/A
Default:	0		
Control Mode:	-		
Unit:	-		
Range:	0 ~ 18		
Data Size:	16-bit		
Format:	Decimal		

Settings: Please refer to P0-02 for its setting value.

P0-21	CM5A	Status Monitor Register 5 Selection	Address: 002AH 002BH

Operation Interface:	Panel/Software	Communication	Related Section: N/A
Default:	0		
Control Mode:	-		
Unit:	-		
Range:	0 ~ 18		
Data Size:	16-bit		
Format:	Decimal		

Settings: Please refer to P0-02 for its setting value.

P0-22	Reserved (Do Not Use)	Address: 002CH 002DH

P0-23	Reserved (Do Not Use)	Address: 002EH 002FH

P0-24	Reserved (Do Not Use)	Address: 0030H 0031H

P0-44★	PCMN	Status Monitor Register (for PC Software)	Address: 0058H 0059H

Operation Interface:	Panel/Software	Communication	Related Section: N/A
Default:	0x0		
Control Mode:	ALL		
Unit:	-		
Range:	determined by the communication address of the designated parameter		
Data Size:	32-bit		
Format:	Decimal		

Settings: Same as parameter P0-09

P0-45■	PCMNA	Status Monitor Register Selection (for PC Software)	Address: 005AH 005BH

Operation Interface:	Panel/Software	Communication	Related Section: 4.3.5
Default:	0x0		
Control Mode:	ALL		
Unit:	-		
Range:	0~127		
Data Size:	16-bit		
Format:	Decimal		

Settings: Same as parameter P0-17

P0-46★	SVSTS	Servo Output Status Display	Address: 005CH 005DH

Operation Interface:	Panel/Software	Communication	Related Section: N/A
Default:	0		
Control Mode:	ALL		
Unit:	-		
Range:	0x00 ~ 0xFF		
Data Size:	16-bit		
Format:	Hexadecimal		

Settings: Bit0: SRDY (Servo is ready)

Bit1: SON (Servo On)

Bit2: ZSPD (Zero speed detection)

Bit3: TSPD (Target speed reached)

Bit4: TPOS (Target position reached)

Bit5: TQL (Torque limiting)

Bit6: ALRM (Servo alarm)

Bit7: BRKR (Brake control output)

Bit9: OLW (Early warning for overload)

Bit10: WARN (When Servo warning,CW, CCW, EMGS, under voltage, Communication error, etc, occurs, DO is ON)

Bit11 ~ Bit15: Reserved

P1-xx Basic Parameters

P1-00▲	PTT	External Pulse Input Type		Address: 0100H 0101H
	Operation Interface:	Panel/Software	Communication	Related Section: 6.2.1
	Default:	0x2		
	Control Mode:	PT		
	Unit:	-		
	Range:	0 ~ 1142		
	Data Size:	16-bit		
	Format:	Hexadecimal		

Settings:

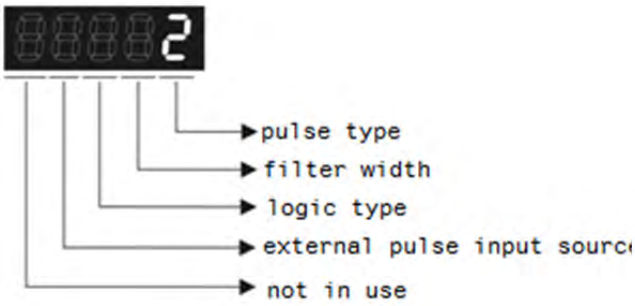

● Pulse type

0: AB phase pulse (4x)

1: Clockwise (CW) + Counterclockwise (CCW) pulse

2: Pulse + Symbol

Other settings: reserved

● Filter width

If the received frequency is much higher than the setting, it will be regarded as the noise and filtered out.

Setting Value	Low-speed Filter Frequency (Min. pulse width *note 1)	Setting Value	High-speed Filter Frequency (Min. pulse width *note 1)
0	0.83Mpps (600ns)	0	3.33Mpps (150ns)
1	208Kpps (2.4us)	1	0.83Mpps (600ns)
2	104Kpps (4.8us)	2	416Kpps (1.2us)
3	52Kpps (9.6us)	3	208Kpps (2.4us)
4	No Filter Function	4	No Filter Function

NOTE

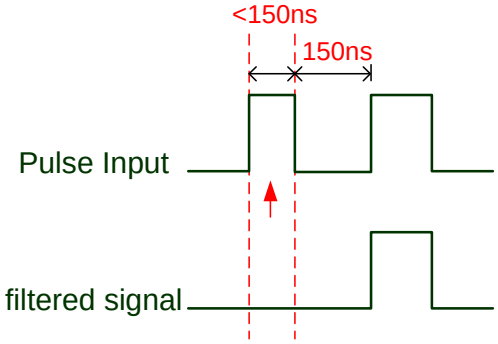

When this pulse frequency is less than 150 ns, this signal will be regarded as a low-level pulse and two input pulses will be regarded as one input pulse.

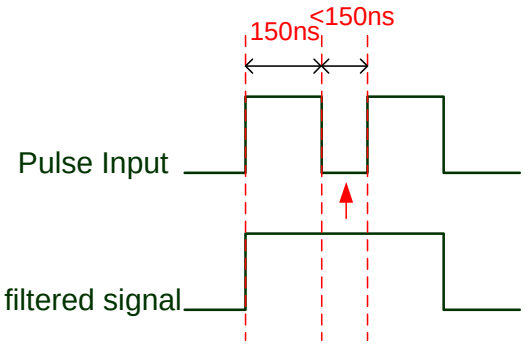

When this pulse frequency is less than 150 ns, this signal will be regarded as a high-level pulse and two input pulses will be regarded as one input pulse.

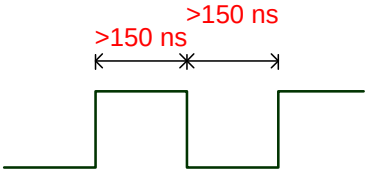

When the pulse frequencies of high-level duty and low-level duty both are greater than 150 ns, the signal will not be filtered (that is, the pulse command will pass through).

If the user uses 2~4 MHz input pulse, it is suggested to set the filter value to 4. Please note that the applicable version is: DSP version 1.005 sub10 and version above.

Note: When the signal is the high-speed pulse specification of 4 Mpps and the settings value of the filter is 4, then pulse will not be filtered.

- Logic Type

Logic		Pulse Type	High-speed and Low-speed pulse input	
			Forward	Reverse
0	Positive Logic		A Pulse Phase Lead	A Pulse Phase Lag
		AB phase pulse	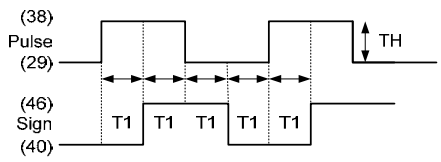	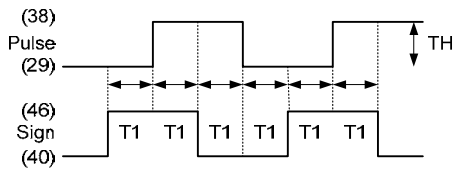
		CW and CCW pulse	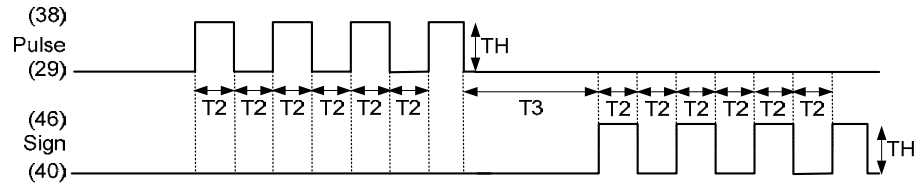	

Logic		Pulse Type	High-speed pulse input	
			Forward	Reverse
0	Positive Logic	Pulse + Symbol	Sign = high	Sign = low
			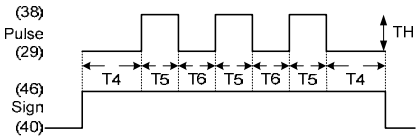	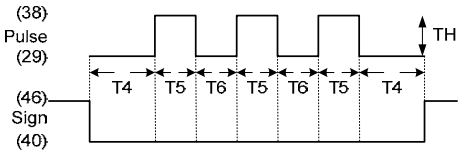

Logic		Pulse Type	Low-speed pulse input	
			Forward	Reverse
0	Positive Logic	Pulse + Symbol	Sign = low	Sign = high
			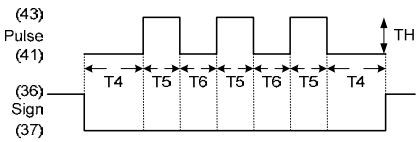	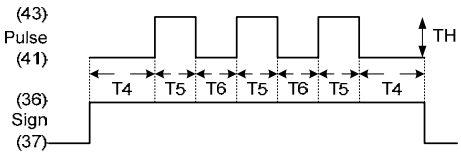

For digital circuit, it uses 0 and 1 represents two status, which is high voltage and low voltage. In Positive Logic, 1 represents high voltage and 0 represents low voltage and vice versa in Negative Logic.

For example:

Positive Logic

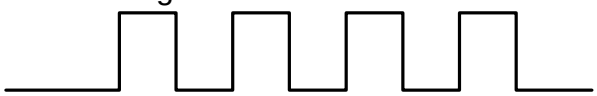

Negative Logic

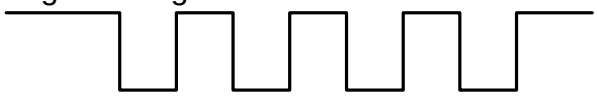

Pulse specification		Max. input frequency	Min. time width					
			T1	T2	T3	T4	T5	T6
High-speed pulse	Differential Signal	4Mpps	62.5ns	125ns	250ns	200ns	125ns	125ns
Low-speed pulse	Differential Signal	500Kpps	0.5μs	1μs	2μs	2μs	1μs	1μs
	Open collector	200Kpps	1.25μs	2.5μs	5μs	5μs	2.5μs	2.5μs

Pulse specification		Max. input frequency	Voltage specification	Forward Current
High-speed pulse	Differential Signal	4Mpps	5V	< 25mA
Low-speed pulse	Differential Signal	500Kpps	2.8V ~ 3.7V	< 25mA
	Open collector	200Kpps	24V (Max.)	< 25mA

- Source of external

  0: Low-speed optical coupler (CN1 Pin: PULSE, SIGN)
  1: High-speed differential (CN1 Pin: HPULSE, HSIGN)

P1-01●	**CTL**	**Control Mode and Output Direction**	**Address: 0102H 0103H**
Operation Interface:	Panel/Software	Communication	Related Section: 6.1, Table 7.1
Default:	0		
Control Mode:	ALL		
Unit:	P (pulse); S (r/min, m/s); T (N-M)		
Range:	00 ~ 110		
Data Size:	16-bit		
Format:	Hexadecimal		

Settings:

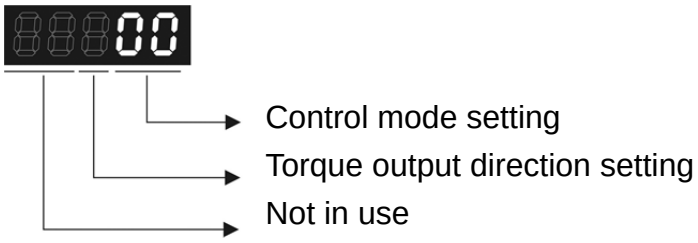

- Control mode setting

Mode	PT	S	T	Sz	Tz
Single Mode					
00	▲				
01	Reserved				
02		▲			
03			▲		
04				▲	
05					▲
Dual Mode					
06	▲	▲			
07	▲		▲		
08	Reserved				
09	Reserved				
0A		▲	▲		

Singl mode:

PT: Position Control Mode (The command source is external pulse and analog voltage which can be selected via DI. PTAS.)

S: Speed Control Mode (The command source is the external analog voltage and register. It can be selected via DI. SPD0, SPD1.)

T: Torque Control Mode (The command source is the external analog voltage and register. It can be selected via DI. TCM0, TCM1.)

Sz: Zero Speed / Internal Speed Command

Tz: Zero Torque / Internal Torque Command

Dual Mode: It can switch mode via the external Digital Input (DI). For example, if it is set to the dual mode of PT/S (Control mode setting: 06), the mode can be switched via DI. S-P (Please refer to table 7.1).

Torque Output Direction Settings

	0	1
Forward	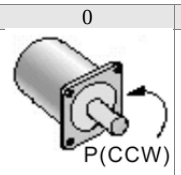	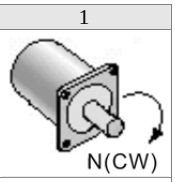
Reverse	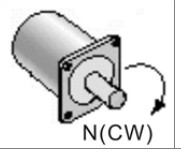	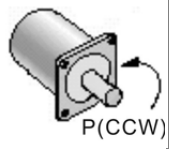

P1-02▲	PSTL	Speed and Torque Limit Setting		Address: 0104H 0105H
	Operation Interface:	Panel/Software	Communication	Related Section: 6.6
	Default:	0		
	Control Mode:	ALL		
	Unit:	-		
	Range:	00 ~ 11		
	Data Size:	16-bit		
	Display Format:	Hexadecimal		

Settings:

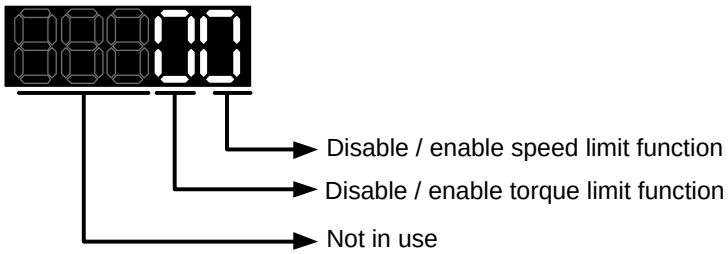

- Disable or Enable speed limit function

  0: Disable speed limit function

  1: Enable speed limit function (It is available in T mode only)

  Others: Reserved

  Block diagram of speed limit setting:

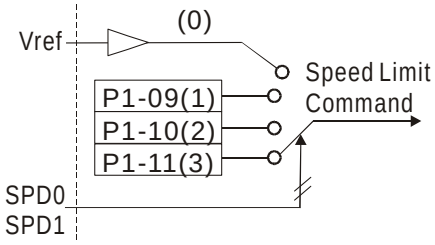

When desire to use speed limit function, users could use parameter setting or DI triggering. That is to say, set P1-02 to 0x0001 or trigger DI will do. Also, users could enable or disable the limit function via DI.SPDLM, which is a more flexible way but would need to take one DI setting. Speed limit can be enabled by P1-02 or DI.

DI.SPD0 and DI.SPD1 are for selecting the limiting source.

- Disable or Enable torque limit function

  0: Disable torque limit function

  1: Enable torque limit function (It is available in position and speed mode)

  Other: Reserved

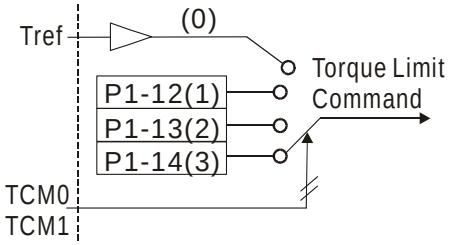

Users could use torque limit function via parameter setting or DI triggering. That is to say, set P1-02 to 0x0010 or trigger DI will do. Also, users could enable or disable the limit function via DI.TRQLM, which is a more flexible way but would need to take one DI setting. Torque limit can be enabled by P1-02 or DI.

DI.TCM0 and DI.TCM1 are for selecting the limiting source.

P1-03	AOUT	Polarity Setting of Encoder Pulse Output		Address: 0106H 0107H
	Operation Interface:	Panel/Software	Communication	Related Section: 3.3.3
	Default:	0		
	Control Mode:	ALL		
	Unit:	-		
	Range:	0 ~ 13		
	Data Size:	16-bit		

Format:	Hexadecimal

Settings:

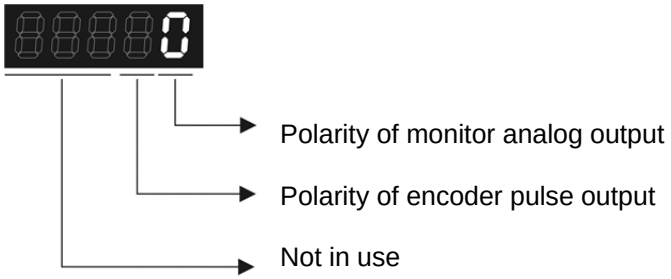

- Polarity of monitor analog output
  0: MON1(+), MON2(+)
  1: MON1(+), MON2(-)
  2: MON1(-), MON2(+)
  3: MON1(-), MON2(-)
- Position pulse outputs polarity
  0: Forward output
  1: Reverse output

P1-04	MON1	MON1 Analog Monitor Output Proportion		Address: 0108H 0109H
Operation Interface:	Panel/Software		Communication	Related Section: 6.4.4
Default:	100			
Control Mode:	ALL			
Unit:	% (full scale)			
Range:	0 ~ 100			
Data Size:	16-bit			
Format:	Decimal			

Settings: Please refer to the P1-03, for the setting of analog output selection.

Example: P0-03 = 01 (MON1 is motor speed analog output, MON2 is motor torque analog output)

$$\text{MON1 output voltage} = 8 \times \frac{\text{Motor speed}}{\left(\text{Max. motor speed} \times \frac{\text{P1-04}}{100}\right)} \quad \text{(unit: Volts)}$$

$$\text{MON2 output voltage} = 8 \times \frac{\text{Motor toque}}{\left(\text{Max. motor torque} \times \frac{\text{P1-05}}{100}\right)} \quad \text{(unit: Volts)}$$

P1-05	MON2	MON2 Analog Monitor Output Proportion		Address: 010AH 010BH
	Operation Interface:	Panel/Software	Communication	Related Section: 6.4.4
	Default:	100		
	Control Mode:	ALL		
	Unit:	% (full scale)		
	Range:	0 ~ 100		
	Data Size:	16-bit		
	Format:	Decimal		

Settings: Please refer to the P1-03, for the setting of analog output selection.

Example: P0-03 = 01 (MON1 is motor speed analog output, MON2 is motor torque analog output)

$$\text{MON1 output voltage} = 8 \times \frac{\text{Motor speed}}{\left(\text{Max. motor speed} \times \frac{\text{P1-04}}{100}\right)} \quad \text{(unit: Volts)}$$

$$\text{MON2 output voltage} = 8 \times \frac{\text{Motor toque}}{\left(\text{Max. motor torque} \times \frac{\text{P1-05}}{100}\right)} \quad \text{(unit: Volts)}$$

P1-06	SFLT	Analog Speed Command (Low-pass Filter)		Address: 010CH 010DH
	Operation Interface:	Panel/Software	Communication	Related Section: 6.3.3
	Default:	0		
	Control Mode:	S		
	Unit:	ms		
	Range:	0 ~ 1000 (0: Disabled)		
	Data Size:	16-bit		
	Format:	Decimal		

Settings: 0: Disabled

P1-07	TFLT	Analog Torque Command (Low-pass Filter)		Address: 010EH 010FH
	Operation Interface:	Panel/Software	Communication	Related Section: 6.4.3
	Default:	0		
	Control Mode:	T		
	Unit:	ms		
	Range:	0 ~ 1000 (0: Disabled)		

Data Size:	16-bit
Display Format:	Decimal

Settings: 0: Disabled

P1-08	PFLT	Smooth Constant of Position Command (Low-pass Filter)	Address: 0110H 0111H

Operation Interface:	Panel/Software	Communication	Related Section: 6.2.6
Default:	0		
Control Mode:	PT		
Unit:	10ms		
Range:	0 ~ 1000		
Data Size:	16-bit		
Format:	Decimal		

Settings: 0: Disabled

P1-09	SP1	Internal Speed Command 1 / Internal Speed Limit 1	Address: 0112H 0113H

Operation Interface:	Panel/Software	Communication	Related Section: 6.3.1
Default:	1000		
Control Mode:	S, T		
Unit:	0.1r/min		
Range:	-50000 ~ +50000		
Data Size:	32-bit		
Format:	Decimal		
Example	120 = 12 r/min		

Settings: Internal Speed Command 1: The setting of the first internal speed command

Internal Speed Limit 1: The setting of the first internal speed limit

P1-10	SP2	Internal Speed Command 2 / Internal Speed Limit 2	Address: 0114H 0115H

Operation Interface:	Panel/Software	Communication	Related Section: 6.3.1
Default:	2000		
Control Mode:	S, T		
Unit:	0.1r/min		
Range:	-50000 ~ +50000		
Data Size:	32-bit		

Format:	Decimal
Example	120 = 12 r/min

Settings: Internal Speed Command 2 : The setting of the second internal speed command

Internal Speed Limit 2: The setting of the second internal speed limit

P1-11	SP3	Internal Speed Command 3 / Internal Speed Limit 3		Address: 0116H 0117H
	Operation Interface:	Panel/Software	Communication	Related Section: 6.3.1
	Default:	3000		
	Control Mode:	S, T		
	Unit:	0.1r/min		
	Range:	-50000 ~ +50000		
	Data Size:	32-bit		
	Format:	Decimal		
	Example	120 = 12 r/min		

Settings: Internal Speed Command 3: The setting of the third internal speed command

Internal Speed Limit 3: The setting of the third internal speed limit

P1-12	TQ1	Internal Torque Command 1 / Internal Torque Limit 1		Address: 0118H 0119H
	Operation Interface:	Panel/Software	Communication	Related Section: 6.4.1
	Default:	100		
	Control Mode:	T, P&S		
	Unit:	%		
	Range:	-300 ~ +300		
	Data Size:	16-bit		
	Format:	Decimal		

Settings: Internal Torque Command 1: The setting of the first internal torque command

Internal Torque Limit 1: The setting of the first internal torque limit

P1-13	TQ2	Internal Torque Command 2 / Internal Torque Limit 2	Address: 011AH 011BH

Operation Interface:	Panel/Software	Communication	Related Section: 6.4.1
Default:	100		
Control Mode:	T, P&S		
Unit:	%		
Range:	-300 ~ +300		
Data Size:	16-bit		
Display Format:	Decimal		

Settings: Internal Torque Command 2: The setting of the second internal torque command

Internal Torque Limit 2: The setting of the second internal torque limit

P1-14	TQ3	Internal Torque Command 3 / Internal Torque Limit 3	Address: 011CH 011DH

Operation Interface:	Panel/Software	Communication	Related Section: 6.4.1
Default:	100		
Control Mode:	T, P&S		
Unit:	%		
Range:	-300 ~ +300		
Data Size:	16-bit		
Format:	Decimal		

Settings: Internal Torque Command 3: The setting of the third internal torque command

Internal Torque Limit 3: The setting of the third internal torque limit

P1-15	Reserved	Address: 011EH 011FH

P1-16	Reserved	Address: 0120H 0121H

P1-17	Reserved	Address: 0122H 0123H

P1-18	Reserved	Address: 0124H 0125H

P1-19	Reserved	Address: 0126H 0127H

P1-20	Reserved	Address: 0128H 0129H

P1-21	Reserved	Address: 012AH 012BH

P1-22	Reserved	Address: 012CH 012DH

P1-23	Reserved	Address: 012EH 012FH

P1-25	VSF1	Low-frequency Vibration Suppression (1)	Address: 0132H 0133H

Operation Interface:	Panel/Software	Communication	Related Section: Section 6.2.9
Default:	1000		
Control Mode:	PT		
Unit:	0.1Hz		
Range:	10 ~ 1000		
Data Size:	16bit		
Format:	DEC		
Example	150 = 15 Hz		

Settings: The setting value of the first low-frequency vibration suppression. If P1-26 is set to 0, then it will disable the first low-frequency filter.

P1-26	VSG1	Low-frequency Vibration Suppression Gain (1)	Address: 0134H 0135H

Operation Interface:	Panel/Software	Communication	Related Section: Section 6.2.9
Default:	0		
Control Mode:	PT		
Unit:	-		
Range:	0~9 (0: Disable the first low-frequency filter)		
Data Size:	16bit		
Format:	DEC		

Settings: The first low-frequency vibration suppression gain. The bigger value it is, the better the position response will be. However, if the value is set too big, the motor will not be able to smoothly operate. It is suggested to set the value to 1.

P1-27	VSF2	Low-frequency Vibration Suppression (2)		Address: 0136H 0137H
	Operation Interface:	Panel/Software	Communication	Related Section: Section 6.2.9
	Default:	1000		
	Control Mode:	PT		
	Unit:	0.1Hz		
	Range:	10 ~ 1000		
	Data Size:	16bit		
	Format:	DEC		
	Example	150 = 15 Hz		

Settings: The setting value of the second low-frequency vibration suppression. If P1-28 is set to 0, then it will disable the second low-frequency filter.

P1-28	VSG2	Low-frequency Vibration Suppression Gain (2)		Address: 0138H 0139H
	Operation Interface:	Panel/Software	Communication	Related Section: Section 6.2.9
	Default:	0		
	Control Mode:	PT		
	Unit:	-		
	Range:	0~9 (0: Disable the second low-frequency filter)		
	Data Size:	16bit		
	Format:	DEC		

Settings: The second low-frequency vibration suppression gain. The bigger value it is, the better the position response will be. However, if the value is set too big, the motor will not be able to smoothly operate. It is suggested to set the value to 1.

P1-31	Reserved	Address: 013EH 013FH

P1-32	LSTP	Motor Stop Mode		Address: 0140H 0141H
	Operation Interface:	Panel/Software	Communication	Related Section: N/A
	Default:	0		
	Control Mode:	ALL		
	Unit:	-		
	Range:	0 ~ 20		
	Data Size:	16-bit		
	Format:	Hexadecimal		

Settings:

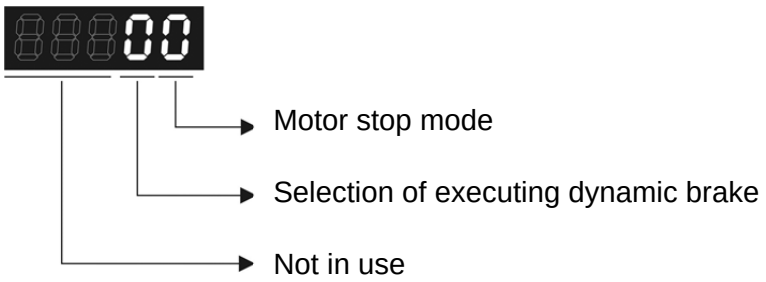

- Motor stop mode: When an alarm occurs, such as CWL, CCWL, EMGS and serial communication error, it is be in motor stop mode.
  0: Stop instantly
  1: Decelerate to stop
- Selection of executing dynamic brake: Stop mode when servo off or an alarm occurs.
  0: Execute dynamic brake
  1: Motor free run
  2: Execute dynamic brake first, then execute free run until it stops (The motor speed is slower than P1-38).

When PL and NL occurs, please refer to event time settings value of P1-06, P1-35, P1-36 to determine the deceleration time. If the setting is 1ms, the motor will stop instantly.

P1-33	Reserved (Do Not Use)	Address: 0142H 0143H

P1-34	TACC	Acceleration Constant of S-Curve	Address: 0144H 0145H
	Operation Interface:	Panel/Software Communication	Related Section: 6.3.3
	Default:	200	
	Control Mode:	S	
	Unit:	ms	
	Range:	1 ~ 20000	
	Data Size:	16-bit	
	Format:	Decimal	

Settings: The time that speed command accelerates from 0 to 3000 r/min. P1-34, P1-35 and P1-36, the acceleration time of speed command from zero to the rated speed, all can be set individually.

NOTE 1) When the source of speed command is analog, and P1-36 is set to 0, it will disable S-curve function.

P1-35	TDEC	Deceleration Constant of S-Curve		Address: 0146H 0147H
	Operation Interface:	Panel/Software	Communication	Related Section: 6.3.3
	Default:	200		
	Control Mode:	S		
	Unit:	ms		
	Range:	1 ~ 20000		
	Data Size:	16-bit		
	Format:	Decimal		

Settings: The time that speed command decelerates from 3000 r/min to 0. P1-34, P1-35 and P1-36, the deceleration time of speed command from the rated speed to zero, all can be set individually.

NOTE 1) When the source of speed command is analog, and P1-36 is set to 0, it will disable S-curve function.

P1-36	TSL	Acceleration / Deceleration Constant of S-curve		Address: 0148H 0149H
	Operation Interface:	Panel/Software	Communication	Related Section: 6.3.3
	Default:	0		
	Control Mode:	S		
	Unit:	ms		
	Range:	0 ~ 10000 (0: Disabled)		
	Data Size:	16-bit		
	Format:	Decimal		

Settings: Acceleration / Deceleration Constant of S-Curve

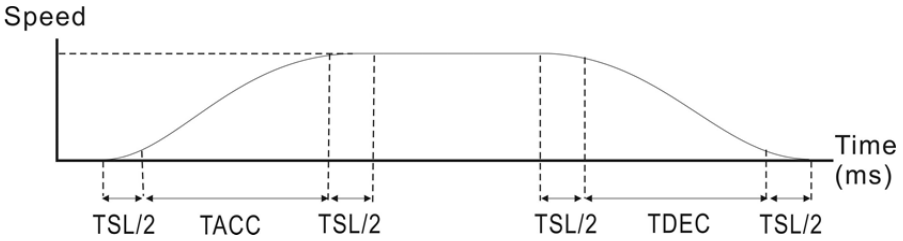

P1-34: Set the acceleration time of acceleration / deceleration of trapezoid-curve

P1-35: Set the deceleration time of acceleration / deceleration of trapezoid-curve

P1-36: Set the smoothing time of S-curve acceleration and deceleration

P1-34, P1-35 and P1-36 can be set individually.

NOTE 1)When the source of speed command is analog, and P1-36 is set to 0, it will disable S-curve function.

P1-37	GDR	Inertia Ratio and Load Weight Ratio to Servo Motor		Address: 014AH 014BH
	Operation Interface:	Panel/Software	Communication	Related Section: N/A
	Default:	1.0	10	
	Control Mode:	ALL		
	Unit:	1 times	0.1 times	
	Range:	0.0 ~ 200.0	0 ~ 2000	
	Data Size:	16-bit		
	Format:	One-digit	Decimal	
	Example:	1.5 = 1.5 times	15 = 1.5 times	

Settings: Inertia ratio to servo motor (rotary motor)
(J_load / J_motor)
Among them:
J_motor: Rotor inertia of the servo motor
J_load: Total equivalent of inertia of external mechanical load.

P1-38	ZSPD	Zero Speed Range Setting		Address: 014CH 014DH
	Operation Interface:	Panel/Software	Communication	Related Section: Table 7.2
	Default:	10.0	100	
	Control Mode:	ALL		
	Unit:	1 r/min	0.1 r/min	
	Range:	0.0 ~ 200.0	0 ~ 2000	
	Data Size:	16-bit		
	Format:	One-digit	Decimal	
	Example:	1.5 = 1.5 r/min	15 = 1.5 r/min	

Settings: Setting the output range of zero-speed signal (ZSPD). When the forward / reverse speed of the motor is slower than the setting value, the digital output will be enabled.

P1-39	SSPD	Target Motor Detection Level		Address: 014EH 014FH
	Operation Interface:	Panel/Software	Communication	Related Section: Table 7.2
	Default:	3000		
	Control Mode:	ALL		
	Unit:	r/min		
	Range:	0 ~ 5000		
	Data Size:	16-bit		
	Format:	Decimal		

Settings: When the target speed is reached, DO (TSPD) is enabled. It means when the motor speed in forward / reverse direction is higher than the setting value, the target speed is reached and enables DO.

P1-40▲	VCM	Max. Output of Analog Speed Command		Address: 0150H 0151H
	Operation Interface:	Panel/Software	Communication	Related Section: 6.3.4
	Default:	rated speed		
	Control Mode:	S, T		
	Unit:	r/min		
	Range:	0 ~ 10000		
	Data Size:	16-bit		
	Format:	Decimal		

Settings: Maximum Speed of Analog Speed Command:

In speed mode, the analog speed command inputs the swing speed setting of the max. voltage (10V).

For example, if the setting is 3000, when the external voltage input is 10V, it means the speed control command is 3000r/min. If the external voltage input is 5V, then the speed control command is 1500r/min.

Speed control command = input voltage value x setting value / 10

In position or torque mode, analog speed limit inputs the swing speed limit setting of the max. voltage (10V).

Speed limit command = input voltage value x setting value / 10

P1-41▲	TCM	Max. Output of Analog Torque Command		Address: 0152H 0153H
	Operation Interface:	Panel/Software	Communication	Related Section: 6.4.4
	Default:	100		
	Control Mode:	ALL		
	Unit:	%		
	Range:	0 ~ 1000		
	Data Size:	16-bit		
	Format:	Decimal		

Settings: Maximum Output of Analog Torque Speed:

In torque mode, the analog torque command inputs the torque setting of the max. voltage (10V). When the default setting is 100, if the external voltage inputs 10V, it means the torque control command is 100% rated torque. If the external voltage inputs 5V,

then the torque control command is 50% rated torque.

Torque control command = input voltage value x setting value / 10 (%)

In speed, PT and PR mode, the analog torque limit inputs the torque limit setting of the max. voltage (10V).

Torque limit command = input voltage value x setting value / 10 (%)

P1-42	MBT1	Enable Delay Time of Brake		Address: 0154H 0155H
	Operation Interface:	Panel/Software	Communication	Related Section: 6.5.5
	Default:	0		
	Control Mode:	ALL		
	Unit:	ms		
	Range:	0 ~ 1000		
	Data Size:	16-bit		
	Format:	Decimal		

Settings: Set the delay time from servo ON to activate the signal of mechanical brake (BRKR).

P1-43	MBT2	Disable Delay Time of Brake		Address: 0156H 0157H
	Operation Interface:	Panel/Software	Communication	Related Section: 6.5.5
	Default:	0		
	Control Mode:	ALL		
	Unit:	ms		
	Range:	-1000 ~ +1000		
	Data Size:	16-bit		
	Format:	Decimal		

Settings: Set the delay time from servo OFF to switch off the signal of brake (BRKR).

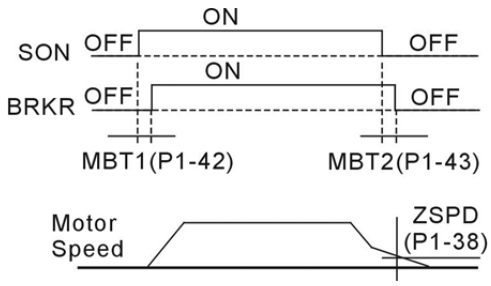

NOTE

1) If the delay time of P1-43 has not finished yet and the motor speed is slower than P1-38, the signal of brake (BRKR) will be disabled.

2) If the delay time of P1-43 is up and the motor speed is higher than P1-38, the signal of brake (BRKR) will be disabled.

3) When Servo OFF due to Alarm (except AL022) or emergency, the setting of P1-43 is equivalent to 0 if P1-43 is set to a negative value.

P1-44▲	GR1	Gear Ratio (Numerator) (N1)		Address: 0158H 0159H
	Operation Interface:	Panel/Software	Communication	Related Section: Section 6.2.3
	Default:	16		
	Control Mode:	PT		
	Unit:	pulse		
	Range:	1 ~ (2^{26}-1)		
	Data Size:	32-bit		
	Format:	Decimal		

Settings: Please refer to P2-60~P2-62 for the setting of multiple gear ratio (numerator).

NOTE

1. In PT mode, the setting value can be changed when Servo ON.

P1-45▲	GR2	Gear Ratio (Denominator) (M)		Address: 015AH 015BH
	Operation Interface:	Panel/Software	Communication	Related Section: Section 6.2.3
	Default:	10		
	Control Mode:	PT		
	Unit:	pulse		
	Range:	1 ~ (2^{31}-1)		
	Data Size:	32-bit		
	Format:	Decimal		

Settings: If the setting is wrong, the servo motor will easily have sudden unintended acceleration.

Please follow the rules for setting:

The setting of pulse input:

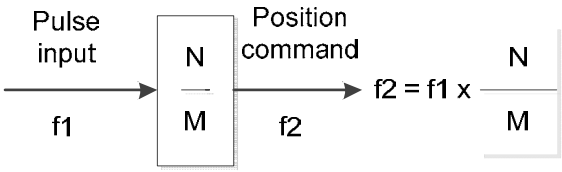

Range of command pulse input: 1 / 50 < Nx / M < 25600 (x=1, 2, 3, 4)

NOTE 1) The setting value cannot be changed when Servo ON in PT mode.

P1-46▲	GR3	Pulse Number of Encoder Output		Address: 015CH 015DH
	Operation Interface:	Panel/Software	Communication	Related Section: N/A
	Default:	2500		
	Control Mode:	ALL		
	Unit:	pulse		
	Range:	4 ~ 40000		
	Data Size:	32-bit		
	Format:	Decimal		

Settings: This parameter is used to set the number of single-phase pulse output per revolution.
Selection of pulse output:
1) Set P2-66 to 0x000. The setting of P1-46 is the number of single-phase pulse output.

Parameter setting: P1-46=4, P2-66=0X0000

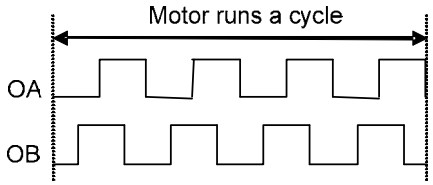

2) Set P2-66 to 0x8000. The setting of P1-46 is the pulse number after dividing by quadrupler frequency

Parameter setting: P1-46=4, P2-66=0X8000

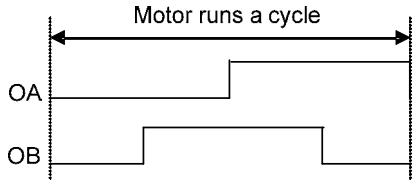

NOTE The following circumstances might exceed the max. allowable input pulse frequency and occurs AL018:

1. Encoder error
2. Motor speed is above the value set by parameter P1-76

P1-47	SPOK	Speed Reached (DO:SP_OK) Range		Address: 015EH 015FH
	Operation Interface:	Panel/Software	Communication	Related Section: N/A
	Default:	10		
	Control Mode:	S, Sz		
	Unit:	r/min		
	Range:	0 ~ 300		
	Data Size:	16-bit		
	Format:	Decimal		

Settings: When the deviation between speed command and motor feedback speed is smaller than this parameter, then the digital output DO.SP_OK (DO code is 0x19) is ON.

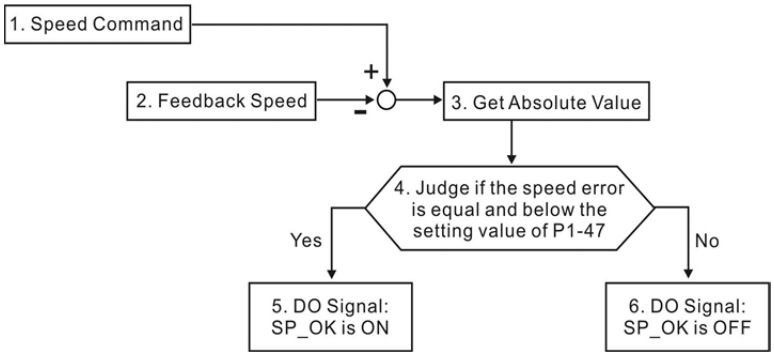

1. Speed Command: It is the command issued by the user (without acceleration / deceleration), not the one of front end speed circuit.

   Source: Analog voltage and register
2. Feedback Speed: The actual speed of the motor and have gone through the filter.
3. Obtain the absolute Value
4. DO.SP_OK will be ON when the absolute value of speed error is smaller than P1-47, or it will be OFF. If P1-47 is 0, DO.SP_OK is always OFF.

P1-48	Reserved	Address: 0160H 0161H

P1-49	Reserved	Address: 0162H 0163H

P1-50	Reserved	Address: 0164H 0165H

P1-51	Reserved	Address: 0166H 0167H

P1-52	RES1	Regenerative Resistor Value		Address: 0168H 0169H
	Operation Interface:	Panel/Software	Communication	Related Section: 6.6.3
	Default:	See the table below		
	Control Mode:	ALL		
	Unit:	Ohm		
	Range:	10 ~ 750		
	Data Size:	16-bit		
	Format:	Decimal		

Settings:

Model	Default
750 W models	100 Ω
1 kW to 3 kW models	40 Ω

P1-53	RES2	Regenerative Resistor Capacity		Address: 016AH 016BH
	Operation Interface:	Panel/Software	Communication	Related Section: 6.6.3
	Default:	See the table below		
	Control Mode:	ALL		
	Unit:	Watt		
	Range:	30 ~ 3000		
	Data Size:	16-bit		
	Format:	Decimal		

Settings:

Model	Default
750 W models	60 W
1 kW to 3 kW models	60 W

P1-54	PER	Position Completed Range		Address: 016CH 016DH
	Operation Interface:	Panel/Software	Communication	Related Section: Table 7.2
	Default:	1600		
	Control Mode:	PT		
	Unit:	pulse		
	Range:	0 ~ 1280000		
	Data Size:	32-bit		
	Format:	Decimal		

Settings: In position mode (PT), if the deviation pulse number is smaller than the setting range (the setting value of parameter P1-54),

DO.TPOS is ON.

P1-55	MSPD	Maximum Speed Limit		Address: 016EH 016FH
	Operation Interface:	Panel/Software	Communication	Related Section: N/A
	Default:	rated speed		
	Control Mode:	ALL		
	Unit:	r/min		
	Range:	0 ~ Max. speed		
	Data Size:	16-bit		
	Format:	Decimal		

Settings: The default of the max. speed of servo motor is set to the rated speed.

P1-56	OVW	Output Overload Warning Level		Address: 0170H 0171H
	Operation Interface:	Panel/Software	Communication	Related Section: N/A
	Default:	120		
	Control Mode:	ALL		
	Unit:	%		
	Range:	0 ~ 120		
	Data Size:	16-bit		
	Format:	Decimal		

Settings: The setting value is 0 ~ 100, if the servo motor continuously outputs the load and is higher than the setting proportion (P1-56), the early warning for overload (DO is set to 10, OLW) will occur.

If the setting value is over 100, it will disable this function.

P1-57	CRSHA	Motor Crash Protection (Torque Percentage)		Address: 0172H 0173H
	Operation Interface:	Panel/Software	Communication	Related Section: N/A
	Default:	0		
	Control Mode:	ALL		
	Unit:	%		
	Range:	0 ~ 300		
	Data Size:	16-bit		
	Format:	Decimal		

Settings: Setup protection level (for the percentage of rated torque, set the value to 0 means to disable the function, set the value to 1 or number above means to enable the function)

P1-58	CRSHT	Motor Crash Protection Time		Address: 0174H 0175H
	Operation Interface:	Panel/Software	Communication	Related Section: N/A
	Default:	1		
	Control Mode:	ALL		
	Unit:	ms		
	Range:	0 ~ 1000		
	Data Size:	16-bit		
	Format:	Decimal		

Settings: Setup the protection time:

When it reaches the level, AL.030 occurs after exceeding the protection time.

NOTE This function is only suitable for non-contactable application, such as electric discharge machines. (Please setup P1-37 correctly).

P1-59	MFLT	Analog Speed Command		Address: 0176H 0177H
	Operation Interface:	Panel/Software	Communication	Related Section: N/A
	Default:	0.0	0	
	Control Mode:	S		
	Unit:	1 ms	0.1 ms	
	Range:	0.0 ~ 4.0 (0: Disabled)	0 ~ 40 (0: Disabled)	
	Data Size:	16-bit		
	Format:	One-digit	Decimal	
	Example:	1.5 = 1.5 ms	15 = 1.5 ms	

Settings: (Moving filter)

0: Disabled

P1-06 is low-pass filter and P1-59 is moving filter. The difference step command; while the low-pass filter brings better smooth effect to command end.

Therefore, it is suggested that if the speed loop receives the command from the controller for forming the position control loop, then low-pass filter can be used. If it is only for the speed control, then it should use Moving Filter for better smoothing.

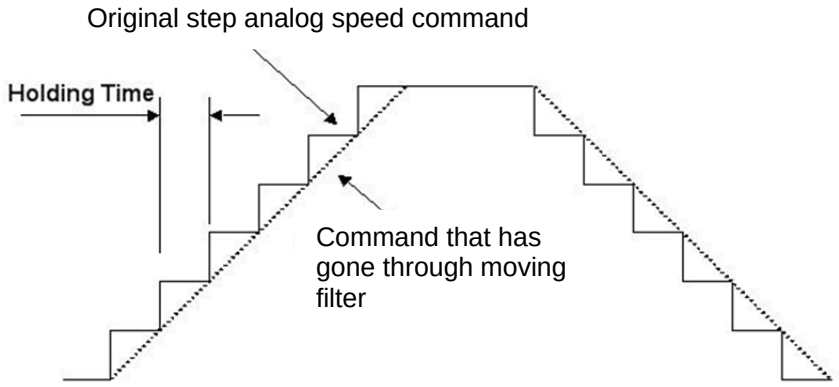

P1-60	Reserved	Address: 0178H 0179H

P1-61	Reserved	Address: 017AH 017BH

P1-62	FRCL	Friction Compensation	Address: 017CH 017DH

Operation Interface:	Panel/Software	Communication	Related Section: N/A
Default:	0		
Control Mode:	PT, S		
Unit:	%		
Range:	0 ~ 100		
Data Size:	16-bit		
Format:	Decimal		

Settings: The level of friction compensation (the percentage of rated torque. Set the value to 0 means to disable the function; set the value to 1 or number above means to enable it.)

P1-63	FRCT	Friction Compensation	Address: 017EH 017FH

Operation Interface:	Panel/Software	Communication	Related Section: N/A
Default:	0		
Control Mode:	PT, S		
Unit:	ms		
Range:	0 ~ 1000		
Data Size:	16-bit		
Format:	Decimal		

Settings: Setup smoothing constant of friction compensation.

P1-64	Reserved	Address: 0180H 0181H

P1-65	Reserved	Address: 0182H 0183H

P1-66	Reserved	Address: 0184H 0185H

P1-67	Reserved	Address: 0186H 0187H

P1-68	PFLT2	Position Command Moving Filter 1	Address: 0188H 0189H

Operation Interface:	Panel/Software	Communication	Related Section: N/A
Default:	4		
Control Mode:	PT		
Unit:	ms		
Range:	0 ~ 100 (0: Disabled)		
Data Size:	16-bit		
Format:	Decimal		

Settings: 0: Disabled

Moving Filter can activate smooth function in the beginning and the end of step command, but it will delay the command.

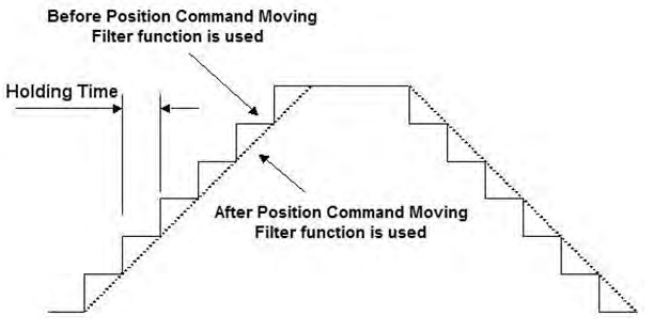

P1-69	Reserved	Address: 018AH 018BH

P1-70	Reserved	Address: 018CH 018DH

P1-71	Reserved	Address: 018EH 018FH

P1-72	Reserved	Address: 0190H 0191H

P1-73	Reserved	Address: 0192H 0193H

P1-74	Reserved	Address: 0194H 0195H

P1-75	Reserved	Address: 0196H 0197H

P1-76	AMSPD	Max. Rotation of Encoder Output Setting (OA, OB)	Address: 0198H 0199H

Operation Interface:	Panel/Software	Communication	Related Section: P1-46
Default:	5500		
Control Mode:	ALL		
Unit:	r/min		
Range:	0 ~ 6000		
Data Size:	16-bit		
Format:	Decimal		

Settings: According to the real application, this parameter is set for the maximum speed and the servo drive will generate smooth function automatically for encoder output signals.

When the value is set to 0, the function is disabled.

P1-77	PFLT3	Position Command Moving Filter 2	Address: 019AH 019BH

Operation Interface:	Panel/Software	Communication	Related Section: N/A
Default:	4		
Control Mode:	PT		
Unit:	ms		
Range:	0 ~ 100		
Data Size:	16-bit		
Format:	Decimal		

Settings: 0: Disabled

Moving Filter can activate smooth function in the beginning and the end of step command, but it will delay the command.

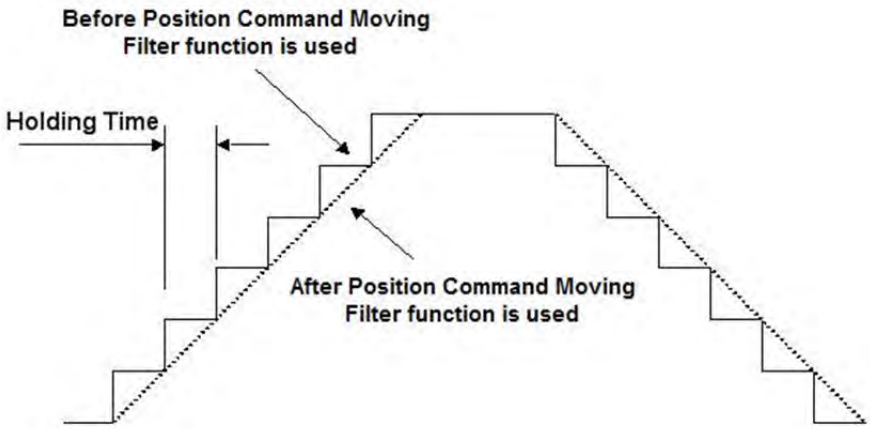

P2-xx Extension Parameters

P2-00	KPP	Position Loop Gain		Address: 0200H 0201H
	Operation Interface:	Panel/Software	Communication	Related Section: 6.2.5
	Default:	35		
	Control Mode:	PT		
	Unit:	rad/s		
	Range:	0 ~ 2047		
	Data Size:	16-bit		
	Format:	Decimal		

Settings: When the value of position loop gain is increased, the position response can be enhanced and the position error can be reduced. If the value is set too big, it may easily cause vibration and noise.

P2-01	PPR	Switching Rate of Position Loop Gain		Address: 0202H 0203H
	Operation Interface:	Panel/Software	Communication	Related Section: 6.2.5
	Default:	100		
	Control Mode:	PT		
	Unit:	%		
	Range:	10 ~ 500		
	Data Size:	16-bit		
	Format:	Decimal		

Settings: Switch the changing rate of position loop gain according to the gain-switching condition.

P2-02	PFG	Position Feed Forward Gain		Address: 0204H 0205H
	Operation Interface:	Panel/Software	Communication	Related Section: 6.2.5
	Default:	50		
	Control Mode:	PT		
	Unit:	%		
	Range:	0 ~ 100		
	Data Size:	16-bit		
	Format:	Decimal		

Settings: If the position command is changed smoothly, increasing the gain value can reduce the position error.
If the position command is not changed smoothly, decreasing the gain value can tackle the problem of mechanical vibration.

P2-03	PFF	Smooth Constant of Position Feed Forward Gain		Address: 0206H 0207H
	Operation Interface:	Panel/Software	Communication	Related Section: N/A
	Default:	5		
	Control Mode:	PT		
	Unit:	ms		
	Range:	2 ~ 100		
	Data Size:	16-bit		
	Format:	Decimal		

Settings: If the position command is changed smoothly, decreasing the value can reduce the position error. If the position command is not changed smoothly, increasing the value can tackle the problem of mechanical vibration.

P2-04	KVP	Speed Loop Gain		Address: 0208H 0209H
	Operation Interface:	Panel/Software	Communication	Related Section: 6.3.6
	Default:	500		
	Control Mode:	ALL		
	Unit:	rad/s		
	Range:	0 ~ 8191		
	Data Size:	16-bit		
	Format:	Decimal		

Settings: Increase the value of speed loop gain can enhance the speed response. However, if the value is set too big, it would easily cause resonance and noise.

P2-05	SPR	Speed Loop Gain Switching Rate		Address: 020AH 020BH
	Operation Interface:	Panel/Software	Communication	Related Section: N/A
	Default:	100		
	Control Mode:	ALL		
	Unit:	%		
	Range:	10 ~ 500		
	Data Size:	16-bit		
	Format:	Decimal		

Settings: Switch the changing rate of speed loop gain according to the gain switching condition.

P2-06	KVI	Speed Integral Compensation		Address: 020CH 020DH
	Operation Interface:	Panel/Software	Communication	Related Section: 6.3.6
	Default:	100		
	Control Mode:	ALL		
	Unit:	rad/s		
	Range:	0 ~ 1023		
	Data Size:	16-bit		
	Format:	Decimal		

Settings: Increasing the value of speed integral compensation can enhance speed response and diminish the deviation of speed control. However, if the value is set too big, it would easily cause resonance and noise.

P2-07	KVF	Speed Feed Forward Gain		Address: 020EH 020FH
	Operation Interface:	Panel/Software	Communication	Related Section: 6.3.6
	Default:	0		
	Control Mode:	ALL		
	Unit:	%		
	Range:	0 ~ 100		
	Data Size:	16-bit		
	Format:	Decimal		

Settings: When the speed control command runs smoothly, increasing the gain value can reduce the speed command error. If the command does not run smoothly, decreasing the gain value can reduce the mechanical vibration during operation.

P2-08■	PCTL	Special Parameter Write-in		Address: 0210H 0211H
	Operation Interface:	Panel/Software	Communication	Related Section: N/A
	Default:	0		
	Control Mode:	ALL		
	Unit:	N/A		
	Range:	0 ~ 65535		
	Data Size:	16-bit		
	Format:	Decimal		

Settings: Special parameter write-in:

Parameter code	Function
10	Reset the parameter (Apply to the power again after reset)
20	P4-10 is writable
22	P4-11~P4-21are writable
406	Enable forced DO mode
400	When forced DO mode is enabled, it can switch back to the normal DO mode.

Password protective setting:

1. Enter 5-digit number, press the same password again (The top digit should be 1 at least.).
2. Re-power on the servo drive, the protective funciton will be activated immediately.

Parameter setting after setting up the password:

When entering the correct password, the parameter can be set.

Clear the password: After entering the correct password, please enter “0” twice continuously.

P2-09	DRT	DI Debouncing Time		Address: 0212H 0213H
	Operation Interface:	Panel/Software	Communication	Related Section: N/A
	Default:	2		
	Control Mode:	ALL		
	Unit:	2ms		
	Range:	0 ~ 20		
	Data Size:	16-bit		
	Format:	Decimal		
	Example:	4 = 8 ms		

Settings: When the environmental noise is big, increasing the setting value can enhance the control stability. However, if the value is set too big, the response time will be influenced.

P2-10	DI1	DI1 Funcitonal Planning		Address: 0214H 0215H
	Operation Interface:	Panel/Software	Communication	Related Section: Table 7.1
	Default:	101		
	Control Mode:	ALL		
	Unit:	N/A		
	Range:	0 ~ 0x015F (The last two codes are DI code)		

Data Size:	16-bit
Format:	Hexadecimal

Settings:

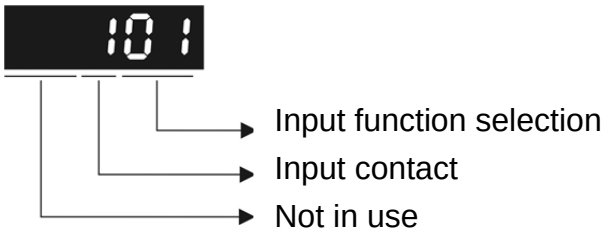

- Input funciton selection: Please refer to table 7.1
- Input contact: **a** or **b** contact

  0: Set the input contact as normally closed (**b** contact)

  1: Set the input contact as normally opened (**a** contact)

  (P2-10 ~ P2-17 and P2-36) The setting value of function programmed

  When parameters are modified, please re-start the servo drive to ensure it can work normally.

Note: Parameter P3-06 is used to set how digital inputs (DI) accepts commands, through external terminal or the communication which determined by P4-07.

P2-11	**DI2**	**DI2 Funcitonal Planning**		**Address: 0216H 0217H**
	Operation Interface:	Panel/Software	Communication	Related Section: Table 7.1
	Default:	104		
	Control Mode:	ALL		
	Unit:	N/A		
	Range:	0 ~ 0x015F (The last two codes are DI code)		
	Data Size:	16-bit		
	Format:	Hexadecimal		

Settings: Please refer to the description of P2-10

P2-12	**DI3**	**DI3 Funcitonal Planning**		**Address: 0218H 0219H**
	Operation Interface:	Panel/Software	Communication	Related Section: Table 7.1
	Default:	116		
	Control Mode:	ALL		
	Unit:	N/A		
	Range:	0 ~ 0x015F (The last two codes are DI code)		
	Data Size:	16-bit		

Format:	Hexadecimal

Settings: Please refer to the description of P2-10

P2-13	DI4	DI4 Funcitonal Planning		Address: 021AH 021BH
Operation Interface:	Panel/Software	Communication		Related Section: Table 7.1
Default:	117			
Control Mode:	ALL			
Unit:	N/A			
Range:	0 ~ 0x015F (The last two codes are DI code)			
Data Size:	16-bit			
Format:	Hexadecimal			

Settings: Please refer to the description of P2-10

P2-14	DI5	DI5 Funcitonal Planning		Address: 021CH 021DH
Operation Interface:	Panel/Software	Communication		Related Section: Table 7.1
Default:	102			
Control Mode:	ALL			
Unit:	N/A			
Range:	0 ~ 0x015F (The last two codes are DI code)			
Data Size:	16-bit			
Format:	Hexadecimal			

Settings: Please refer to the description of P2-10

P2-15	DI6	DI6 Funcitonal Planning		Address: 021EH 021FH
Operation Interface:	Panel/Software	Communication		Related Section: Table 7.1
Default:	22			
Control Mode:	ALL			
Unit:	N/A			
Range:	0 ~ 0x015F (The last two codes are DI code)			
Data Size:	16-bit			
Format:	Hexadecimal			

Settings: Refer to P2-10 for explanation.

P2-16	DI7	DI7 Funcitonal Planning		Address: 0220H 0221H
	Operation Interface:	Panel/Software	Communication	Related Section: Table 7.1
	Default:	23		
	Control Mode:	ALL		
	Unit:	N/A		
	Range:	0 ~ 0x015F (The last two codes are DI code)		
	Data Size:	16-bit		
	Format:	Hexadecimal		

Settings: Please refer to the description of P2-10

P2-17	DI8	DI8 Funcitonal Planning		Address: 0222H 0223H
	Operation Interface:	Panel/Software	Communication	Related Section: Table 7.1
	Default:	21		
	Control Mode:	ALL		
	Unit:	N/A		
	Range:	0 ~ 0x015F (The last two codes are DI code)		
	Data Size:	16-bit		
	Format:	Hexadecimal		

Settings: Please refer to the description of P2-10

P2-18	DO1	DO1 Funcitonal Planning		Address: 0224H 0225H
	Operation Interface:	Panel/Software	Communication	Related Section: Table 7.2
	Default:	101		
	Control Mode:	ALL		
	Unit:	N/A		
	Range:	0 ~ 0x013F (The last two codes are DO code)		
	Data Size:	16-bit		
	Format:	Hexadecimal		

Settings:

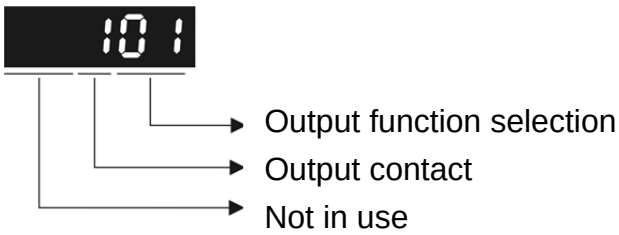

- Output funciton selection: Please refer to table 7.2.
- Output contact: **a** or **b** contact

  0: Set Set the output contact as normally closed (**b** contact)

  1: Set the output contact as normally opened (**a** contact)

  (P2-18 ~ P2-22 and P2-37) The setting value of function programmed

  When parameters are modified, please re-start the servo drive to ensure it can work normally.

P2-19	DO2	DO2 Funcitonal Planning		Address: 0226H 0227H
	Operation Interface:	Panel/Software	Communication	Related Section: Table 7.2
	Default:	103		
	Control Mode:	ALL		
	Unit:	N/A		
	Range:	0 ~ 0x013F (The last two codes are DO code)		
	Data Size:	16-bit		
	Format:	Hexadecimal		

Settings: Please refer to the description of P2-18

P2-20	DO3	DO3 Funcitonal Planning		Address: 0228H 0229H
	Operation Interface:	Panel/Software	Communication	Related Section: Table 7.2
	Default:	109		
	Control Mode:	ALL		
	Unit:	N/A		
	Range:	0 ~ 0x013F (The last two codes are DO code)		
	Data Size:	16-bit		
	Format:	Hexadecimal		

Settings: Please refer to the description of P2-18

P2-21	DO4	DO4 Funcitonal Planning		Address: 022AH 022BH
	Operation Interface:	Panel/Software	Communication	Related Section: Table 7.2
	Default:	105		
	Control Mode:	ALL		
	Unit:	N/A		

Range:	0 ~ 0x013F (The last two codes are DO code)
Data Size:	16-bit
Format:	Hexadecimal

Settings: Please refer to the description of P2-18

P2-22	DO5	DO5 Funcitonal Planning		Address: 022CH 022DH
	Operation Interface:	Panel/Software	Communication	Related Section: Table 7.2
	Default:	7		
	Control Mode:	ALL		
	Unit:	N/A		
	Range:	0 ~ 0x013F (The last two codes are DO code)		
	Data Size:	16-bit		
	Format:	Hexadecimal		

Settings: Please refer to the description of P2-18

P2-23	NCF1	Resonance Suppression (Notch Filter) (1)		Address: 022EH 022FH
	Operation Interface:	Panel/Software	Communication	Related Section: 6.2.5
	Default:	1000		
	Control Mode:	ALL		
	Unit:	Hz		
	Range:	50 ~ 2000		
	Data Size:	16-bit		
	Format:	Decimal		

Settings: The first setting value of resonance frequency. If P2-24 is set to 0, this function is disabled. P2-43 and P2-44 are the second Notch filter.

P2-24	DPH1	Resonance Suppression (Notch filter) Attenuation Rate (1)		Address: 0230H 0231H
	Operation Interface:	Panel/Software	Communication	Related Section: 6.3.7
	Default:	0		
	Control Mode:	ALL		
	Unit:	dB		
	Range:	0 ~ 32 (0: Disabled)		
	Data Size:	16-bit		
	Format:	Decimal		

Settings: The first resonance suppression (notch filter) attenuation rate. When this parameter is set to 0, the function of Notch filter is disabled.

P2-25	NLP	Low-pass Filter of Resonance Suppression		Address: 0232H 0233H
	Operation Interface:	Panel/Software	Communication	Related Section: 6.3.7
	Default:	0.2 (1kW and below models) or 0.5 (other models)	2 (1kW and below models) or 5 (other models)	
	Control Mode:	ALL		
	Unit:	1ms	0.1ms	
	Range:	0.0 ~ 100.0	0 ~ 1000	
	Data Size:	16-bit		
	Format:	One-digit	Decimal	
	Example:	1.5 = 1.5 msec	15 = 1.5 msec	

Settings: Set the low-pass filter of resonance suppression. When the value is set to 0, the function of low-pass filter is disabled.

P2-26	DST	Anti-Interference Gain		Address: 0234H 0235H
	Operation Interface:	Panel/Software	Communication	Related Section: N/A
	Default:	0		
	Control Mode:	ALL		
	Unit:	0.001		
	Range:	0 ~ 1023 (0: Disabled)		
	Data Size:	16-bit		
	Format:	Decimal		

Settings: Increasing the value of this parameter can increase the damping of speed loop. It is suggested to set P2-26 equals to the value of P2-06. If users desire to adjust P2-26, please follow the rules below.

1. In speed mode, increase the value of this parameter can reduce speed overshoot.
2. In position mode, decrease the value of this parameter can reduce position overshoot.

P2-27	GCC	Gain Switching and Switching Selection		Address: 0236H 0237H
	Operation Interface:	Panel/Software	Communication	Related Section: N/A
	Default:	0		
	Control Mode:	ALL		
	Unit:	N/A		
	Range:	0 ~ 4		
	Data Size:	16-bit		
	Format:	Hexadecimal		

Settings:

- Gain Switching Condition Settings:
  0: Disable gain switching function.
  1: The signal of gain switching (GAINUP) is ON.
  2: In position control mode, the position error is bigger than the value of P2-29.
  3: The frequency of position command is bigger than the value of P2-29.
  4: When the speed of servo motor is faster than the value of P2-29.
  5: The signal of gain switching (GAINUP) is OFF.
  6: In position control mode, the position error is smaller than the value of P2-29.
  7: When the frequency of position command is smaller than the value of P2-29.
  8: When the speed of servo motor is slower than the value of P2-29.
- Gain Switching Control Settings
  0: Gain switching
  1: Integrator switching, P → PI

Setting Value	Control mode P	Control mode P S	Status
0	P2-00 x 100% P2-04 x 100%	P2-04 x 100%	Before switching
	P2-00 x P2-01 P2-04 x P2-05	P2-04 x P2-05	After switching
1	P2-06 x 0% P2-26 x 0%		Before switching
	P2-06 x 100% P2-26 x 100%		After switching

P2-28	GUT	Gain Switching Time Constant		Address: 0238H 0239H
	Operation Interface:	Panel/Software	Communication	Related Section: N/A
	Default:	10		
	Control Mode:	ALL		
	Unit:	10ms		
	Range:	0 ~ 1000 (0: Disabled)		
	Data Size:	16-bit		
	Format:	Decimal		
	Example:	15 = 150 msec		

Settings: It is for switching the smooth gain. (0: disable this function)

P2-29	GPE	Gain Switching		Address: 023AH 023BH
	Operation Interface:	Panel/Software	Communication	Related Section: N/A
	Default:	160000		
	Control Mode:	ALL		
	Unit:	pulse, Kpps, r/min		
	Range:	0 ~ 3840000		
	Data Size:	32-bit		
	Format:	Decimal		

Settings: The setting of gain switching (Pulse error, Kpps, r/min) is determined by the selection of gain switching (P2-27).

P2-30■	INH	Auxiliary Function		Address: 023CH 023DH
	Operation Interface:	Panel/Software	Communication	Related Section: N/A
	Default:	0		
	Control Mode:	ALL		
	Unit:	N/A		
	Range:	-8 ~ +8		
	Data Size:	16-bit		
	Format:	Decimal		

Settings: 0: Disable all functions described below

1: Force to Servo On the software

2~4: (reserved)

5: This setting allows the written parameters not retain after power off. When the data is no need to save, it can avoid the parameters continuously writing into EEPROM and shortening the lifetime of EEPROM.

Setting this parameter is a must when using communication control.

NOTE Please set the value to 0 in normal operation. The value returns to 0 automatically after re-power on.

P2-31	AUT1	Speed Loop Frequency Response Setting in Auto and Semi-auto Mode		Address: 023EH 023FH
	Operation Interface:	Panel/Software	Communication	Related Section: 5.6, 6.3.6
	Default:	80		
	Control Mode:	ALL		
	Unit:	Hz		
	Range:	1 ~ 1000		
	Data Size:	16-bit		
	Format:	Hexadecimal		

Settings: 1~50Hz: Low stiffness, low response

51~250Hz: Medium stiffness, medium response

251~850Hz: High stiffness, high respons

NOTE 1) According to the speed loop setting of P2-31, the servo drive sets the position loop response automatically.

2) The function is enabled via parameter P2-32. Please refer to Chapter 5.6 for corresponding bandwidth size of the setting value.

P2-32▲	AUT2	Tuning Mode Selection		Address: 0240H 0241H
	Operation Interface:	Panel/Software	Communication	Related Section: 5.6, 6.3.6
	Default:	0		
	Control Mode:	ALL		
	Unit:	N/A		
	Range:	0 ~ 2		
	Data Size:	16-bit		
	Format:	Hexadecimal		

Settings: 0: Manual mode

1: Auto Mode (Continuous adjustment)

2: Semi-Auto Mode (Non-continuous adjustment)

Relevant description of manual mode setting :

When P2-32 is set to 0, parameters related to gain control, such as P2-00, P2-02, P2-04, P2-06, P2-07, P2-25 and P2-26, all can be set by the user.

When switching mode from auto or semi-auto to manual, parameters about gain will be updated automatically.

Relevant description of auto mode setting:

Continue to estimate the system inertia, save the inertia ratio to P1-37 every 30 minutes automatically and refer to the stiffness and bandwidth setting of P2-31.

1. Set the system to manual mode 0 from auto 1 or semi-auto 2, the system will save the estimated inertia value to P1-37 automatically and set the corresponding parameters.
2. Set the system to auto mode 1 or semi-auto mode 2 from manual mode 0, please set P1-37 to the appropriate value.
3. Set the system to manual mode 0 from auto mode 1, P2-00, P2-04 and P2-06 will be modified to the corresponding parameters of auto mode.
4. Set the system to manual mode 0 from semi-auto mode 2, P2-00, P2-04, P2-06, P2-25 and P2-26 will be modified to the corresponding parameters of semi-auto mode.

Relevant description of semi-auto mode setting:

1. When the system inertia is stable, the value of P2-33 will be 1 and the system stops estimating. The inertia value will be saved to P1-37 automatically. When switching mode to semi-auto mode (from manual or auto mode), the system starts to estimate again.
2. When the system inertia is over the range, the value of P2-33 will be 0 and the system starts to estimate and adjust again.

P2-33▲	AUT3	Semi-Auto Inertia Adjustment		Address: 0242H 0243H
	Operation Interface:	Panel/Software	Communication	Related Section: N/A
	Default:	0		
	Control Mode:	ALL		
	Unit:	N/A		
	Range:	0 ~ 1		
	Data Size:	16-bit		
	Format:	Decimal		

Settings:

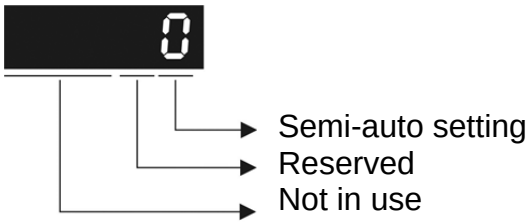

- Semi-auto Setting:
  1: It means the inertia estimation in semi-auto mode is completed. The inertia value can be accessed via P1-37.
  0: 1. When the display is 0, it means the inertia adjustment is not completed and is adjusting.

2. When the setting is 0, it means the inertia adjustment is not completed and is adjusting.

P2-34	SDEV	The Condition of Overspeed Warning		Address: 0244H 0245H
	Operation Interface:	Panel/Software	Communication	Related Section: N/A
	Default:	5000		
	Control Mode:	S		
	Unit:	r/min		
	Range:	1 ~ 6000		
	Data Size:	16-bit		
	Format:	Decimal		

Settings: The setting of over speed warning in servo drive error display (P0-01)

P2-35	PDEV	Condition of Excessive Position Control Deviation Warning		Address: 0246H 0247H
	Operation Interface:	Panel/Software	Communication	Related Section: N/A
	Default:	480000		
	Control Mode:	PT		
	Unit:	pulse		
	Range:	1 ~ 16000000		
	Data Size:	32-bit		
	Format:	Decimal		

Settings: The setting of excessive position control deviation warning in servo drive error display (P0-01).

P2-36	DI9	Extended EDI9 Functional Planning		Address: 0248H 0249H
	Operation Interface:	Panel/Software	Communication	Related Section: Table 7.1
	Default:	0		
	Control Mode:	ALL		
	Unit:	N/A		
	Range:	0 ~ 0x015F (The last two codes are EDI code)		
	Data Size:	16-bit		
	Format:	Hexadecimal		

Settings:

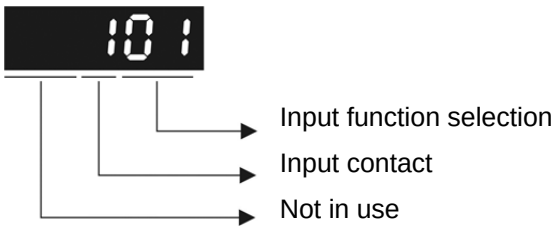

- Input function selection: Please refer to table 7.1
- Input contact: **a** or **b** contact

  0: Set the input contact as normally closed (**b** contact)

  1: Set the input contact as normally opened (**a** contact)

P2-37	**DO6**	**DO6 Funcitonal Planning**		**Address: 024AH 024BH**
	Operation Interface:	Panel/Software	Communication	Related Section: Table 7.2
	Default:	7		
	Control Mode:	ALL		
	Unit:	N/A		
	Range:	0 ~ 0x013F (The last two codes are DO code)		
	Data Size:	16-bit		
	Format:	Hexadecimal		

Settings: Please refer to the description of P2-18

P2-38	**Reserved**	**Address: 024CH 024DH**

P2-39	**Reserved**	**Address: 024EH 024FH**

P2-40	**Reserved**	**Address: 0250H 0251H**

P2-41	**Reserved**	**Address: 0252H 0253H**

P2-42	**Reserved**	**Address: 0254H 0255H**

P2-43	**NCF2**	**Resonance Suppression (Notch Filter) (2)**		**Address: 0256H 0257H**
	Operation Interface:	Panel/Software	Communication	Related Section: 6.3.7
	Default:	1000		
	Control Mode:	ALL		
	Unit:	Hz		
	Range:	50 ~ 2000		

Data Size:	16-bit
Format:	Decimal

Settings: The second setting value of resonance frequency. If P2-44 is set to 0, this function is disabled. P2-23 and P2-24 are the first Notch filter.

P2-44	DPH2	Resonance Suppression (Notch Filter) Attenuation Rate (2)		Address: 0258H 0259H
	Operation Interface:	Panel/Software	Communication	Related Section: 6.3.7
	Default:	0		
	Control Mode:	ALL		
	Unit:	dB		
	Range:	0 ~ 32		
	Data Size:	16-bit		
	Format:	Decimal		

Settings: The second resonance suppression (notch filter) attenuation rate. When this parameter is set to 0, the function of Notch filter is disabled.

P2-45	NCF3	Resonance Suppression (Notch Filter) (3)		Address: 025AH 025BH
	Operation Interface:	Panel/Software	Communication	Related Section: 6.3.7
	Default:	1000		
	Control Mode:	ALL		
	Unit:	Hz		
	Range:	50 ~ 2000		
	Data Size:	16-bit		
	Format:	Decimal		

Settings: The third group of mechanism resonance frequency setting value. If P2-46 is set to 0, this function will be disabled. P2-23 and P2-24 are the first group of resonance suppression (Notch filter).

P2-46	DPH3	Resonance Suppression (Notch Filter) Attenuation Rate (3)		Address: 025CH 025DH
	Operation Interface:	Panel/Software	Communication	Related Section: 6.3.7
	Default:	0		
	Control Mode:	ALL		
	Unit:	dB		
	Range:	0 ~ 32		
	Data Size:	16-bit		

Display Format:	Decimal

Settings: The third group of resonance suppression (Notch filter) attenuation rate. Set the value to 0 to disable the function of Notch filter.

P2-47	ANCF	Auto Resonance Suppression Mode Setting		Address: 025EH 025FH
Operation Interface:	Panel/Software	Communication		Related Section: N/A
Default:	1			
Control Mode:	ALL			
Unit:	N/A			
Range:	0 ~ 2			
Data Size:	16-bit			
Format:	Decimal			

Settings: 0: The value of P2-43, P2-44 and P2-45, P2-46 will retain.

1: The value of P2-43, P2-44 and P2-45, P2-46 will retain after resonance suppression.

2: Continuous resonance suppression

Description of Auto Mode Setting:

When it is set to 1: Auto resonance, the value returns to 0 automatically and saves the point of resonance suppression when it is stable. If it is unstable, re-power on or set back to 1 for re-estimation again.

When it is set to 2: Continuous suppression automatically. When it is stable, the point of resonance suppression will be saved. If it is unstable, re-power on for re-estimation.

When switching to mode 0 from mode 2 or 1, the setting of P2-43, P2-44, P2-45 and P2-46 will be saved automatically.

P2-48	ANCL	Resonance Suppression Detection Level		Address: 0260H 0261H
Operation Interface:	Panel/Software	Communication		Related Section: N/A
Default:	100			
Control Mode:	ALL			
Unit:	N/A			
Range:	1 ~ 300%			
Data Size:	16-bit			
Format:	Decimal			

Settings: (The smaller the setting value is, the more sensitive the resonance will be.)

The setting value of P2-48 ↑, resonance sensitivieness ↓.

The setting value of P2-48 ↓, resonance sensitivieness ↑.

P2-49	SJIT	Speed Detection Filter		Address: 0262H 0263H
	Operation Interface:	Panel/Software	Communication	Related Section: 6.2.5
	Default:	0		
	Control Mode:	ALL		
	Unit:	sec		
	Range:	0 ~ 1F		
	Data Size:	16-bit		
	Format:	Decimal		

Settings:

Setting Value	Speed Estimation Bandwidth (Hz)
00	2500
01	2250
02	2100
03	2000
04	1800
05	1600
06	1500
07	1400
08	1300
09	1200
0A	1100
0B	1000
0C	950
0D	900
0E	850
0F	800
10	750
11	700
12	650
13	600
14	550
15	500
16	450
17	400
18	350
19	300
1A	250
1B	200
1C	175

Setting Value	Speed Estimation Bandwidth (Hz)
1D	150
1E	125
1F	100

P2-50	DCLR	Pulse Clear Mode	Address: 0264H 0265H

Operation Interface:	Panel/Software	Communication	Related Section: N/A
Default:	00		
Control Mode:	PT		
Unit:	N/A		
Range:	0 ~ 11		
Data Size:	16-bit		
Format:	Hexadecimal		

Settings:

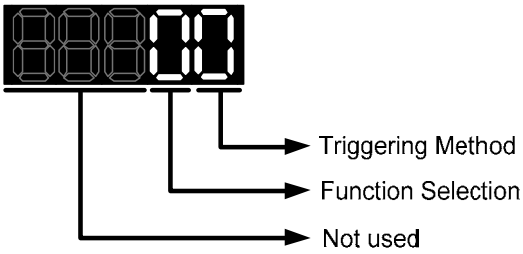

For digital input setting, please refer to Table 7.1.

When set digital input (DI) as CCLR, the funciton of pulse cleasr is effective.

If this DI is ON, the accumulative position error will be cleared to 0.

Triggering Method Settings:

0: CCLR is triggered by rising-edge

1: CCLR is triggered bu level

Function Selection Settings:

1: Clear feedback PUU

0: When this DI is on, the feedback PUU will be clear to 0.

P2-51	Reserved	Address: 0266H 0267H

P2-52	Reserved	Address: 0268H 0269H

P2-53	KPI	Position Integral Compensation		Address: 026AH 026BH
	Operation Interface:	Panel/Software	Communication	Related Section: 6.3.6
	Default:	0		
	Control Mode:	ALL		
	Unit:	rad/s		
	Range:	0 ~ 1023		
	Data Size:	16-bit		
	Format:	Decimal		

Settings: When increasing the value of position control integral, reducing the position steady-state error, it may easily cause position overshoot and noise if the value is set too big.

P2-54	Reserved	Address: 026CH 026DH

P2-55	Reserved	Address: 026EH 026FH

P2-56	Reserved	Address: 0270H 0271H

P2-57	Reserved	Address: 0272H 0273H

P2-58	Reserved	Address: 0274H 0275H

P2-59	Reserved	Address: 0276H 0277H

P2-60	GR4	Gear Ratio (Numerator) (N2)		Address: 0278H 0279H
	Operation Interface:	Panel/Software	Communication	Related Section: N/A
	Default:	16		
	Control Mode:	PT		
	Unit:	pulse		
	Range:	1 ~ (2^{26}-1)		
	Data Size:	32-bit		
	Display Format:	Decimal		

Settings: The numerator of electronic gear ratio can be selected via DI.GNUM0 and DI.GNUM1 (Please refer to table 7.1). If DI.GNUM0 and DI.GNUM1 are not set, P1-44 will automatically be the numerator of electronic gear ratio. Please switch GNUM0 and GNUM1 in stop status to avoid the mechanical vibration.

P2-61	GR5	Gear Ratio (Numerator) (N3)	Address: 027AH 027BH

Operation Interface:	Panel/Software	Communication	Related Section: N/A
Default:	16		
Control Mode:	PT		
Unit:	pulse		
Range:	1 ~ (2^{26}-1)		
Data Size:	32-bit		
Format:	Decimal		

Settings: Please refer to the description of P2-60.

P2-62	GR6	Gear Ratio (Numerator) (N4)	Address: 027CH 027DH

Operation Interface:	Panel/Software	Communication	Related Section: N/A
Default:	16		
Control Mode:	PT		
Unit:	pulse		
Range:	1 ~ (2^{26}-1)		
Data Size:	32-bit		
Format:	Decimal		

Settings: Please refer to the description of P2-60.

P2-63	Reserved	Address: 027EH 027FH

P2-64	Reserved	Address: 0280H 0281H

P2-65	GBIT	Special-bit Register	Address: 0282H 0283H

Operation Interface:	Panel/Software	Communication	Related Section: N/A
Default:	0		
Control Mode:	PT, S		
Unit:	N/A		
Range:	0 ~ 0xFFFF		
Data Size:	N/A		
Format:	N/A		

Settings:

Bit7	Bit6	Bit5	Bit4	Bit3	Bit2	Bit1	Bit0

Bit15	Bit14	Bit13	Bit12	Bit11	Bit10	Bit9	Bit8

- Bit2 ~ Bit5, Bit7 and Bit14 ~ Bit15: Reserved, please set to 0.
- Bit0 ~ Bit1: Reserved
- Bit6: In PT mode, the switch of pulse error protection function (pulse frequency is over high)

  Bit6

  Bit6 = 0: Normally use the function of pulse error protection
  Bit6 = 1: Disable the function of pulse error protection

- Bit8: U, V, W wiring error protection

  Bit8

  Bit8 = 1: Enable U, V, W wiring error protection

- Bit9: U, V, W wiring cut-off detection

  Bit9

  Bit9 = 1: Enable U, W, W wiring cut-off detection

- Bit 10: DI.ZCLAMP function selection

  Bit10

  When the following conditions are all established, the function of ZCLAMP is enabled.
  Condition 1: speed mode
  Condition 2: DI. ZCLAMP is On.
  Condition 3: Motor speed is slower than the value of P1-38.
  Bit10 = 0: The command source is analog, ZCLAMP function will use the analog speed command without acceleration / deceleration processing to judge if this function should be enabled. The motor will be locked at the position where ZCALMP conditions are established.

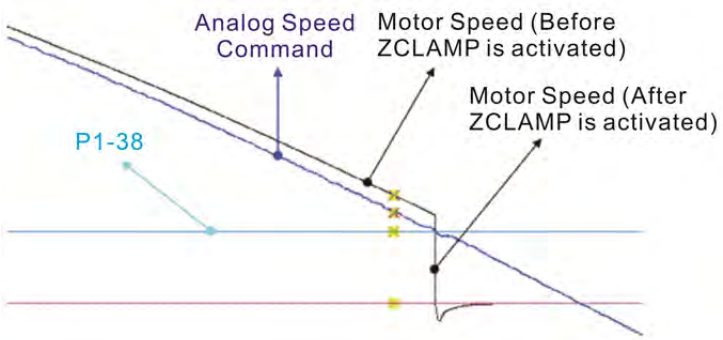

Bit10 = 0: The command source is register. ZCLAMP function will use the register speed command with acceleration / deceleration processing to judge if this function is enabled. The motor will be locked at the position where ZCALMP conditions are established.

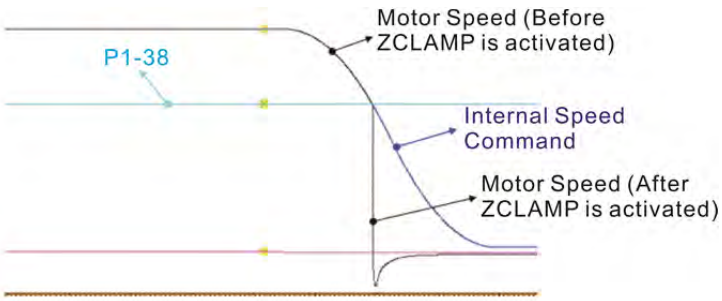

Bit10 = 1: The command source is analog speed command. ZCLAMP function will use the analog speed command without acceleration / deceleration processing to judge if this function is enabled. When ZCALMP conditions are established, the motor speed decelerates to 0 through S-curve. If not, the motor follow the analog speed command through S-curve.

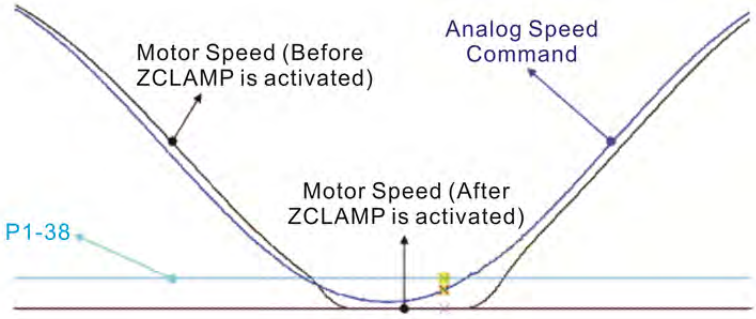

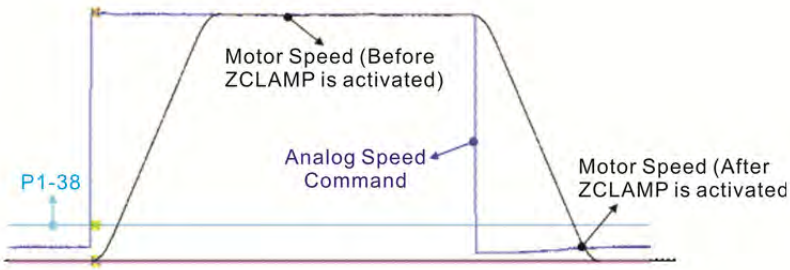

Bit10 = 1: The command source is register. ZCLAMP function will use the register with acceleration / deceleration processing to judge if this function is enabled. When ZCLAMP conditions are established, the motor speed will be set to 0.

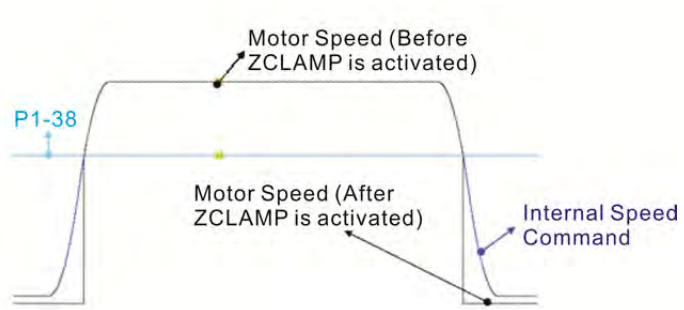

- Bit11: Pulse inhibit funciton

Bit11

Bit11 = 0: Disable NL / PL pulse input inhibit function. In PT mode, the external position pulse command will be input into the servo drive in any condition.

Bit11 = 1: Enable NL / PL pulse input inhibit function. In PT mode, if NL exists, the external NL pulse will be inhibited to input to the servo. PL pulse input will be accepted. In PT mode, if PL exists, the external PL pulse will be inhibited to input to the servo. NL pulse will be accepted.

Please note: In PT mode, if NL and PL both exist, both of them will be inhibited to input to the servo.

- Bit12: Lack phase detection

Bit12

Bit12 = 0: Enable lack phase (AL022) detection

Bit12 = 1: Disable lack phase (AL022) detection

- Bit13: Encoder output error detection function

Bit13

Bit13 = 0: Enable encoder output error (AL018) detection function

Bit13 = 1: Disable encoder output error (AL018) detection function

P2-66	GBIT2	Special-bit Register 2		Address: 0284H 0285H
	Operation Interface:	Panel/Software	Communication	Related Section: N/A
	Default:	0		
	Control Mode:	PT, S		
	Unit:	N/A		
	Range:	0 ~ 0x000F		
	Data Size:	16-bit		
	Format:	Hexadecimal		

Settings: Special-bit Register 2:

Bit7	Bit6	Bit5	Bit4	Bit3	Bit2	Bit1	Bit0
-	-	-	-	-	-	-	-

- **Bit0:** Speed limit accel / decel function

The torque command source is determined by TCM0 and TCM1. When the digital input, TQP or TQN is used, the torque command is activated by TQP or TQN. When TQP is ON, the torque will be output directly as the same as the command souce. For example, when TQP is ON, if the torque command source is analog voltage 5V and P1-41 is set to 100, it means that the torque command is 50% rated torque until the speed is limited. However, with the same circumstances, whenTQN is ON, the torque command is -50% rated torque until the speed is limited.

Speed limit function can be enabled always by P1-02. When P1-02 is set to 0x10, the speed limit function can be enabled all the time and the users do not need to use DI.SPDLM to switch the function.

The speed limit command is determined by SPD0 and SPD1. The acceleration and deceleration time is determined by P1-34, P1-35 and P1-36.

TQP (DI Code: 0x48)	TQN (DI Code: 0x49)	Torque Output
ON	ON	Zero torque output
ON	OFF	Output the torque of the command source directly (do not reverse the command, and output the torque directly)
OFF	ON	Reverse the torque of the command source (reverse the command first, and then output the torque)
OFF	OFF	Zero torque output

The timing charts of speed limit profile (with accel / decel function) and torque command (TQP/TQN):

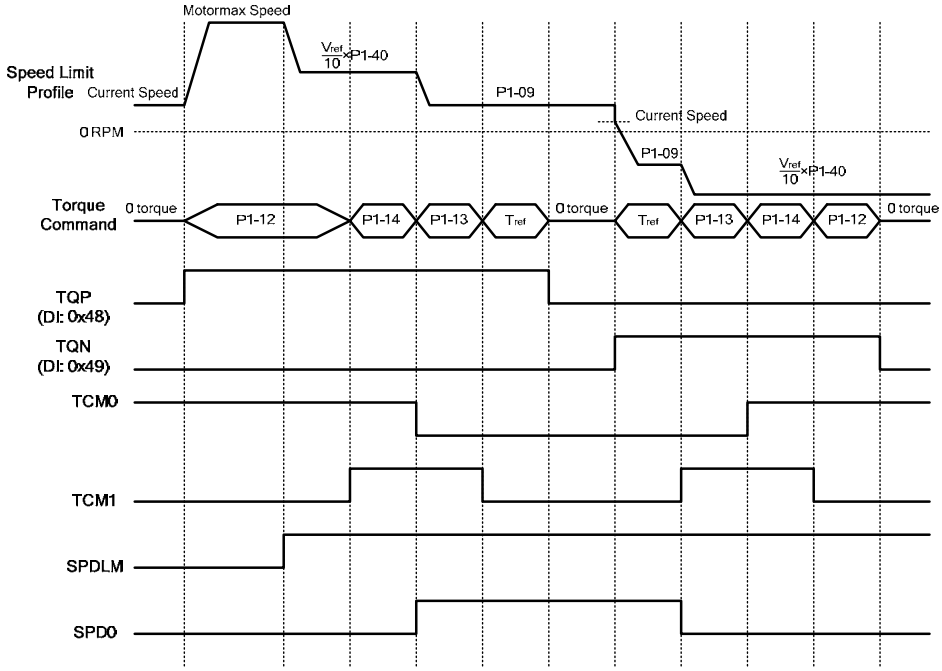

- **Bit1:** Reserved
- **Bit2:** Cancel latch function of low-voltage error

  0: Latch function of low-voltage error: the error will not be cleared automatically.

  1: Cancel latch function of low-voltage error: the error will be cleared automatically.
- **Bit7:** Cancel the display of motor temperature warning

  0: Display motor temperature wanring

  1: Cancel the display of motor temperature warning
- **Bit3 ~ Bit6: Reserved**
- **Bit9:**

  0: When AL.003 occurs, switch on DO.WARN. (DO function 0x11)

  1: When AL.003 occurs, switch on (DO function 0x07)
- **Bit15:** Selection of dncoder pulse output

  0: 0x0000. The setting value of P1-46 represents the single-phase pulse number when motor runs a cycle.

  If P1-46 is set to 2,500 pulse, then the host controller will receive 10, 000 pulse (the quadruple of the single-phase pulse number) when motor runs a cycle.

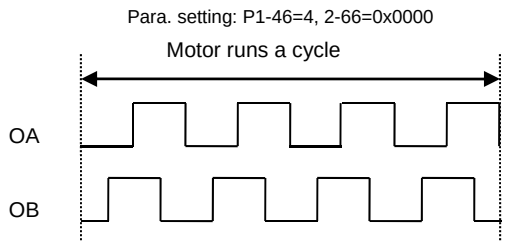

1: 0x8000. The setting value of P1-46 is the pulse number of quadrupler frequency per cycle.
If the pulse number that host controller needs to receive is 187 pulse per cycle, then set P1-46 to 187 pulse, the host controller will receive 187 pulse per cycle.

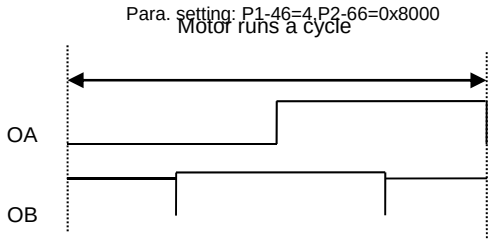

P2-67	JSL	Stable Inertia Estimating Time		Address: 0286H 0287H
	Operation Interface:	Panel/Software	Communication	Related Section: N/A
	Default:	1.5	15	
	Control Mode:	ALL		
	Unit:	1 times	0.1 times	
	Range:	0 ~ 200.0	0 ~ 2000	
	Data Size:	16-bit		
	Format:	One-digit	Decimal	
	Example:	1.5 = 1.5 times	15 = 1.5 times	

Settings: In semi-auto mode, if the value of inertia estimation is smaller than P2-67 and the status remains for a while, the system will regard the inertia estimation as completed.

P3-xx Communication Parameters

P3-00●	ADR	Address Setting		Address: 0300H 0301H
	Operation Interface:	Panel / Software	Communication	Related Section: 8.2
	Default:	0x7F		
	Control Mode:	ALL		
	Unit:	N/A		
	Range:	0x01 ~ 0x7F		
	Data Size:	16-bit		
	Format:	Hexadecimal		

Settings: The communication address setting is divided into Y, X (hexadecimal):

Display	0	0	Y	X
Range	-	-	0 ~ 7	0 ~ F

When using RS-232/RS-485 to communicate, one servo drive can only set one address. The duplicate address setting will cause abnormal communication.

This address represents the absolute address of the servo drive in communication network. It is also applicable to RS-232/485 and CAN bus.

When the communication address setting of MODBUS is set to 0xFF, the servo drive will automatically reply and receive data regardless of the address. However, P3-00 cannot be set to 0xFF.

P3-01	BRT	Transmission Speed		Address: 0302H 0303H
	Operation Interface:	Panel / Software	Communication	Related Section: 8.2
	Default:	0x0033		
	Control Mode:	ALL		
	Unit:	bps		
	Range:	0x0000 ~ 0x0055		
	Data Size:	16-bit		
	Format:	Hexadecimal		

Settings: The setting of transmission speed is divided into Z, Y, X (hexadecimal):

	0	Z	Y	X
COM Port	-	-	RS-485	RS-232
Range	0	0	0 ~ 5	0 ~ 5

Settings:

0: 4800

1: 9600
2: 19200
3: 38400
4: 57600
5: 115200

P3-02	PTL	Communication Protocol		Address: 0304H 0305H
	Operation Interface:	Panel / Software	Communication	Related Section: 8.2
	Default:	0x0066		
	Control Mode:	ALL		
	Unit:	N/A		
	Range:	0x0000 ~ 0x0088		
	Data Size:	16-bit		
	Format:	Hexadecimal		

Settings: The definition of the setting value is as the followings:

	0	Z	Y	X
COM Port	-	-	RS-485	RS-232
Range	0	0	0 ~ 8	0 ~ 8

0: 7, N, 2 (MODBUS, ASCII)
1: 7, E, 1 (MODBUS, ASCII)
2: 7, O,1 (MODBUS, ASCII)
3: 8, N, 2 (MODBUS, ASCII)
4: 8, E, 1 (MODBUS, ASCII)
5: 8, O, 1 (MODBUS, ASCII)
6: 8, N, 2 (MODBUS, RTU)
7: 8, E, 1 (MODBUS, RTU)
8: 8, O, 1 (MODBUS, RTU)

P3-03	FLT	Communication Error Disposal		Address: 0306H 0307H
	Operation Interface:	Panel / Software	Communication	Related Section: 8.2
	Default:	0		
	Control Mode:	ALL		
	Unit:	N/A		
	Range:	0 ~ 1		
	Data Size:	16-bit		
	Format:	Hexadecimal		

Settings: The definition of the setting value is as the following:

0: Warning and keeps running

1: Warning and stops deceleration (The deceleration time is set to parameter P1-32)

P3-04	CWD	Communication Time Out		Address: 0308H 0309H
	Operation Interface:	Panel / Software	Communication	Related Section: 8.2
	Default:	0		
	Control Mode:	ALL		
	Unit:	sec		
	Range:	0 ~ 20		
	Data Size:	16-bit		
	Format:	Decimal		

Settings: If the setting value is not 0, enable communication timeout immediately. If it is set to 0, disable the function.

P3-05	CMM	Communication Mechanism		Address: 030AH 030BH
	Operation Interface:	Panel / Software	Communication	Related Section: 8.2
	Default:	0		
	Control Mode:	ALL		
	Unit:	N/A		
	Range:	0x00 ~ 0x01		
	Data Size:	16-bit		
	Format:	Hexadecimal		

Settings: RS-232 via MOBUS communication or communicate with ASDA-Soft

- RS-232 Communication format

  0: RS-232/RS485 via Modbus communication

  1: RS-232 upon ASDA-Soft software

P3-06■	SDI	Control Switch of Digital Input (DI)		Address: 030CH 030DH
	Operation Interface:	Panel / Software	Communication	Related Section: 8.2
	Default:	0		
	Control Mode:	ALL		
	Unit:	N/A		
	Range:	0x0000 ~ 0x1FFF		
	Data Size:	16-bit		
	Format:	Hexadecimal		

Settings: The source of DI controls the switch.

Each bit of this parameter decides one input source of DI signal:

Bit0 ~ Bit8 correspond to DI1 ~ DI9.

The setting of bit is as the followings:

0: The input status is controlled by the external hardware.

1: The input status is controlled by P4-07.

For the functional planning of digital input, please refer to:

DI1 ~ DI9: P2-10 ~ P2-17 and P2-36

P3-07	CDT	Communication Response Delay Time		Address: 030EH 030FH
	Operation Interface:	Panel / Software	Communication	Related Section: 8.2
	Default:	0		
	Control Mode:	ALL		
	Unit:	1ms		
	Range:	0 ~ 1000		
	Data Size:	16-bit		
	Format:	Decimal		

Settings: Delay the time of communication response from servo drive to controller

P3-08■	MNS	Monitor Mode		Address: 0310H 0311H
	Operation Interface:	Panel / Software	Communication	Related Section: 8.2
	Default:	0000		
	Control Mode:	ALL		
	Unit:	N/A		
	Range:	refer to the description of Settings		
	Data Size:	16-bit		
	Format:	Hexadecimal		

Settings: The setting of monitor mode is divided as H. (hexadecimal):

Word	-	-	Low	High
Function	-	-		Monitor mode
Range	0	0	0	0 ~ 3

The status of this axis or multi-axis can be monitored by communication. The definition of setting value is as follows:

The definition of H setting value:

3: High-speed monitor. The sampling frequency is 16K and can only monitor 2CH

2: High-speed monitor. The sampling frequency is 8K and can monitor 4CH.

1: Reserved

0: Disable the monitor function

P3-09	**Reserved**	**Address: 0312H 0313H**
P3-10	**Reserved**	**Address: 0314H 0315H**
P3-11	**Reserved**	**Address: 0316H 0317H**

P4-xx Diagnosis Parameters

P4-00★	ASH1	Fault Record (N)		Address: 0400H 0401H
	Operation Interface:	Panel / Software	Communication	Related Section: 4.4.1
	Default:	0		
	Control Mode:	ALL		
	Unit:	N/A		
	Range:	N/A		
	Data Size:	32-bit		
	Format:	Hexadecimal		

Settings: The last abnormal status record
Low word: LXXXX: display ALM number
High word: hYYYY: Reserved

P4-01★	ASH2	Fault Record (N-1)		Address: 0402H 0403H
	Operation Interface:	Panel / Software	Communication	Related Section: 4.4.1
	Default:	0		
	Control Mode:	ALL		
	Unit:	N/A		
	Range:	N/A		
	Data Size:	32-bit		
	Format:	Hexadecimal		

Settings: The last second abnormal status record
Low word: LXXXX: display ALM number
High word: hYYYY: display the error code corresponds to CANopen

P4-02★	ASH3	Fault Record (N-2)		Address: 0404H 0405H
	Operation Interface:	Panel / Software	Communication	Related Section: 4.4.1
	Default:	0		
	Control Mode:	ALL		
	Unit:	N/A		
	Range:	N/A		
	Data Size:	32-bit		
	Format:	Hexadecimal		

Settings: The last second abnormal status record
Low word: LXXXX: display ALM number
High word: hYYYY: display the error code corresponds to

CANopen

P4-03★	ASH4	Fault Record (N-3)		Address: 0406H 0407H
	Operation Interface:	Panel / Software	Communication	Related Section: 4.4.1
	Default:	0		
	Control Mode:	ALL		
	Unit:	N/A		
	Range:	N/A		
	Data Size:	32-bit		
	Format:	Hexadecimal		

Settings: The last second abnormal status record

Low word: LXXXX: display ALM number

High word: hYYYY: display the error code corresponds to CANopen

P4-04★	ASH5	Fault Record (N-4)		Address: 0408H 0409H
	Operation Interface:	Panel / Software	Communication	Related Section: 4.4.1
	Default:	0		
	Control Mode:	ALL		
	Unit:	N/A		
	Range:	N/A		
	Data Size:	32-bit		
	Format:	Hexadecimal		

Settings: The last second abnormal status record

Low word: LXXXX: display ALM number

High word: hYYYY: display the error code corresponds to CANopen

P4-05	JOG	JOG Operation		Address: 040AH 040BH
	Operation Interface:	Panel / Software	Communication	Related Section: 4.4.2
	Default:	20		
	Control Mode:	ALL		
	Unit:	r/min		
	Range:	0 ~ 5000		
	Data Size:	16-bit		
	Format:	Decimal		

Settings: Three control methods are as follows:

1. Operation Test

   After the JOG speed is set by P4-05 via panel, the panel will display the symbol of JOG. Pressing the UP Key can control JOG operation in positive direction, pressing the DOWN Key can control negative direction. Stop pressing to stop the JOG operation. If there is any error in this setting, then the motor cannot operate. The maximum JOG speed is the maximum speed of the servo motor.
2. DI control

   If the DI is set to JOGU and JOGD (refer to table 7.1), then the JOG operation in positive or negative direction can be controlled via this DI.
3. Communication Control

   1 ~ 5000: JOG speed

   4998: JOG operation in positive direction

   4999: JOG operation in negative direction

   0: Stop operation

NOTE When writing via communication, if the frequency is high, please set P2-30 to 5.

P4-06 ▲ ■	FOT	Digital Output Register (Readable and Writable)		Address: 040CH 040DH
	Operation Interface:	Panel / Software	Communication	Related Section: 4.4.3
	Default:	0		
	Control Mode:	ALL		
	Unit:	-		
	Range:	0 ~ 0x3F		
	Data Size:	16-bit		
	Format:	Hexadecimal		

Settings: Contact control of the force output

0: Non-force output (When the communication sets to 0, it can cancel the force output function.)

P4-07■	ITST	Input Status		Address: 040CH 040DH
	Operation Interface:	Software (cannot read and write throught the panel)	Communication	Related Section: 4.4.4, 8.2
	Default:	0		
	Control Mode:	ALL		
	Unit:	N/A		
	Range:	0 ~ 01FF		

Data Size:	16-bit
Format:	Hexadecimal

Settings: The DI input signal can come from external terminal (DI1 ~ DI9) or software SDI1 ~ 9 (Bit 0 ~ 8 of corresponding parameter P4-07) and is determined by P3-06. The corresponding bit of P3-06 is 1, which means the source is software SDI (P4-07). If the corresponding bit is 0, then the source is hardware DI. See the following graph:

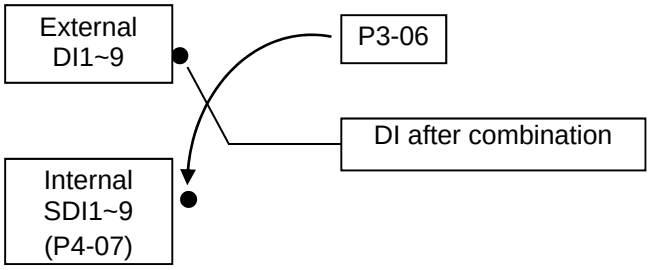

Read parameters: shows the DI status after combination

Write parameters: writes the software SDI status

For example:

The value of reading P4-07 is 0x0011, which means DI1 and DI5 is ON after combination.

The value of writing P4-07 is 0x0011, which means software SDI1 and SDI5 is ON.

Please refer to P2-10 ~ P2-17 and P2-36 for the function program of digital input pin DI (DI1~DI9).

P4-08★	PKEY	Input Status of the Drive Keypad (Read-only)	Address: 0410H 0411H

Operation Interface:	Panel / Software	Communication	Related Section: N/A
Default:	N/A		
Control Mode:	ALL		
Unit:	N/A		
Range:	Read only		
Data Size:	16-bit		
Format:	Hexadecimal		

Settings: The aim is to check if the five Keys, MODE, UP, DOWN, SHIFT and SET can work normally. This parameter is also used to check if the Keys are all functional when producing servo drives.

P4-09★	MOT	Output Status (Read-only)		Address: 0412H 0413H
	Operation Interface:	Panel / Software	Communication	Related Section: 4.4.5
	Default:	N/A		
	Control Mode:	ALL		
	Unit:	N/A		
	Range:	0 ~ 0x3F		
	Data Size:	16-bit		
	Format:	Hexadecimal		

Settings: There is no difference when reading DO output signal via panel or the communication.

P4-10■	CEN	Adjustment Function		Address: 0414H 0415H
	Operation Interface:	Panel / Software	Communication	Related Section: N/A
	Default:	0		
	Control Mode:	ALL		
	Unit:	N/A		
	Range:	0 ~ 6		
	Data Size:	16-bit		
	Format:	Decimal		

Settings: 0: Reserved

1: Execute the adjustment of analog speed input offset

2: Execute the adjustment of analog torque input offset

3: Execute the adjustment of current detector (V phase) hardware offset

4: Execute the adjustment of current detector (W phase) hardware offset

5: Execute the adjustment of 1 ~ 4 hardward offset

6: Execute the adjustment of IGBT ADC

NOTE The adjustment function needs to be enabled by the setting of parameter P2-08. When adjusting, the external wiring which connects to analog speed or torque needs to be removed completely and must be in Servo Off status.

P4-11	SOF1	Analog Speed Input Offset Adjustment 1	Address: 0416H 0417H
Operation Interface:	Panel / Software	Communication	Related Section: N/A
Default:	Factory setting		
Control Mode:	ALL		
Unit:	N/A		
Range:	0 ~ 32767		
Data Size:	16-bit		
Format:	Decimal		

Settings: Manually adjust the hardware offset. The adjustment function needs to be enabled by the setting of parameter P2-08. It is not suggested to adjust the auxiliary adjustment. This parameter cannot be reset.

P4-12	SOF2	Analog Speed Input Offset Adjustment 2	Address: 0418H 0419H
Operation Interface:	Panel / Software	Communication	Related Section: N/A
Default:	Factory setting		
Control Mode:	ALL		
Unit:	N/A		
Range:	0 ~ 32767		
Data Size:	16-bit		
Format:	Decimal		

Settings: Manually adjust the hardware offset. The adjustment function needs to be enabled by the setting of parameter P2-08. It is not suggested to adjust the auxiliary adjustment. This parameter cannot be reset.

P4-13	TOF1	Analog Torque Offset Adjustment 1	Address: 041AH 041BH
Operation Interface:	Panel / Software	Communication	Related Section: N/A
Default:	Factory setting		
Control Mode:	ALL		
Unit:	N/A		
Range:	0 ~ 32767		
Data Size:	16-bit		
Format:	Decimal		

Settings: Manually adjust the hardware offset. The adjustment function needs to be enabled by the setting of parameter P2-08. It is not suggested to adjust the auxiliary adjustment. This parameter cannot be reset.

P4-14	TOF2	Analog Torque Drift Adjustment 2		Address: 041CH 041DH
	Operation Interface:	Panel / Software	Communication	Related Section: N/A
	Default:	Factory setting		
	Control Mode:	ALL		
	Unit:	N/A		
	Range:	0 ~ 32767		
	Data Size:	16-bit		
	Format:	Decimal		

Settings: Manually adjust the hardware offset. The adjustment function needs to be enabled by the setting of parameter P2-08. It is not suggested to adjust the auxiliary adjustment. This parameter cannot be reset.

P4-15	COF1	Current Detector (V1 phase) Offset Adjustment		Address: 041EH 041FH
	Operation Interface:	Panel / Software	Communication	Related Section: N/A
	Default:	Factory setting		
	Control Mode:	ALL		
	Unit:	N/A		
	Range:	0 ~ 32767		
	Data Size:	16-bit		
	Format:	Decimal		

Settings: Manually adjust the hardware offset. The adjustment function needs to be enabled by the setting of parameter P2-08. It is not suggested to adjust the auxiliary adjustment. This parameter cannot be reset.

P4-16	COF2	Current Detector (V2 phase) Offset Adjustment		Address: 0420H 0421H
	Operation Interface:	Panel / Software	Communication	Related Section: N/A
	Default:	Factory setting		
	Control Mode:	ALL		
	Unit:	N/A		
	Range:	0 ~ 32767		
	Data Size:	16-bit		
	Format:	Decimal		

Settings: Manually adjust the hardware offset. The adjustment function needs to be enabled by the setting of parameter P2-08. It is not suggested to adjust the auxiliary adjustment. This parameter

cannot be reset.

P4-17	COF3	Current Detector (W1 phase) Offset Adjustment		Address: 0422H 0423H
	Operation Interface:	Panel / Software	Communication	Related Section: N/A
	Default:	Factory setting		
	Control Mode:	ALL		
	Unit:	N/A		
	Range:	0 ~ 32767		
	Data Size:	16-bit		
	Format:	Decimal		

Settings: Manually adjust the hardware offset. The adjustment function needs to be enabled by the setting of parameter P2-08. It is not suggested to adjust the auxiliary adjustment. This parameter cannot be reset.

P4-18	COF4	Current Detector (W2 phase) Offset Adjustment		Address: 0424H 0425H
	Operation Interface:	Panel / Software	Communication	Related Section: N/A
	Default:	Factory setting		
	Control Mode:	ALL		
	Unit:	N/A		
	Range:	0 ~ 32767		
	Data Size:	16-bit		
	Format:	Decimal		

Settings: Manually adjust the hardware offset. The adjustment function needs to be enabled by the setting of parameter P2-08. It is not suggested to adjust the auxiliary adjustment. This parameter cannot be reset.

P4-19	TIGB	IGBT NTC Adjustment Detection Level (cannot reset)		Address: 0426H 0427H
	Operation Interface:	Panel / Software	Communication	Related Section: N/A
	Default:	Factory setting		
	Control Mode:	ALL		
	Unit:	N/A		
	Range:	1 ~ 3		
	Data Size:	16-bit		
	Format:	Decimal		

Settings: Please cool down the drive to 25 Celsius degree when adjusting

P4-20	DOF1	Offset Adjustment of Analog Monitor Output (MON1)	Address: 0428H 0429H
Operation Interface:	Panel / Software	Communication	Related Section: 6.4.4
Default:	Factory setting		
Control Mode:	ALL		
Unit:	mV		
Range:	-800 ~ 800		
Data Size:	16-bit		
Format:	Decimal		

Settings: Offset adjustment value (cannot reset)

P4-21	DOF2	Offset Adjustment of Analog Monitor Output (MON2)	Address: 042AH 042BH
Operation Interface:	Panel / Software	Communication	Related Section: 6.4.4
Default:	0		
Control Mode:	ALL		
Unit:	mV		
Range:	-800 ~ 800		
Data Size:	16-bit		
Format:	Decimal		

Settings: Offset adjustment value (cannot reset)

P4-22	SAO	Analog Speed Input Offset	Address: 042CH 042DH
Operation Interface:	Panel / Software	Communication	Related Section: N/A
Default:	0		
Control Mode:	S		
Unit:	mV		
Range:	-5000 ~ 5000		
Data Size:	16-bit		
Format:	Decimal		

Settings: Users manually adjust the offset

P4-23	TAO	Analog Torque Input Offset		Address: 042EH 042FH
	Operation Interface:	Panel / Software	Communication	Related Section: N/A
	Default:	0		
	Control Mode:	T		
	Unit:	mV		
	Range:	-5000 ~ 5000		
	Data Size:	16-bit		
	Format:	Decimal		

Settings: Users manually adjust the offset

P4-24	LVL	Level of Undervoltage Error		Address: 0430H 0431H
	Operation Interface:	Panel / Software	Communication	Related Section: N/A
	Default:	160		
	Control Mode:	ALL		
	Unit:	V (rms)		
	Range:	140 ~ 190		
	Data Size:	16-bit		
	Format:	Decimal		

Settings: When the voltage of DC BUS is lower than P4-24* $\sqrt{2}$, the under voltage alarm occurs.

Table 7.1 Function Description of Digital Input (DI)

Setting value: 0x01			
DI Name	Function Description of Digital Input (DI)	Trigger Method	Control Mode
SON	When this DI is On, servo is activated (Servo On)	Level Triggered	All

Setting value: 0x02			
DI Name	Function Description of Digital Input (DI)	Trigger Method	Control Mode
ARST	After the alarm has been cleared, when the DI is ON the drive will show that the alarm has been cleared.	Rising-edge Triggered	All

Setting value: 0x03			
DI Name	Function Description of Digital Input (DI)	Trigger Method	Control Mode
GAINUP	In speed and position mode, when the DI is ON (P2-27 should be set to 1), the gain switched to the one multiplies the switching rate.	Level Triggered	PT, S

Setting value: 0x04			
DI Name	Function Description of Digital Input (DI)	Trigger Method	Control Mode
CCLR	Clear the pulse counter and the setting of parameter P2-50. 0: clear the position pulse deviation (It is suitable in PT mode). When DI is ON, the accumulative pulse deviation of the drive will be cleared to 0.	Rising-edge Triggered, Level Triggered	PT

Setting value: 0x05			
DI Name	Function Description of Digital Input (DI)	Trigger Method	Control Mode
ZCLAMP	When the speed is slower than the setting of zero speed (P1-38), if the DI is ON, the motor stops running. 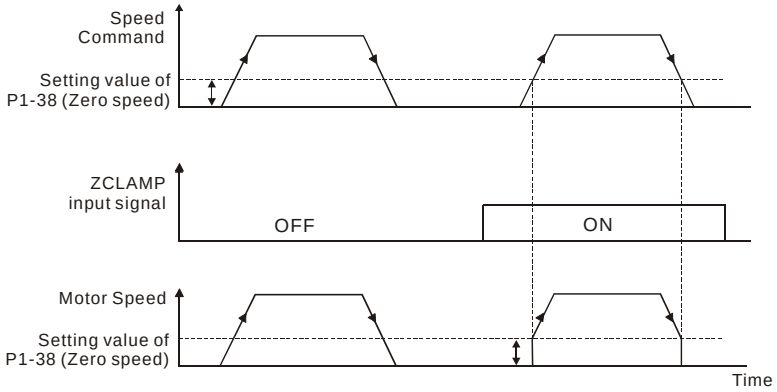	Level Triggered	S

Setting value: 0x06			
DI Name	Function Description of Digital Input (DI)	Trigger Method	Control Mode
CMDINV	In PT and speed mode, when the DI is ON, the input command will be in reverse direction.	Level Triggered	S, T

Setting value: 0x07			
DI Name	Function Description of Digital Input (DI)	Trigger Method	Control Mode
Reserved			

Setting value: 0x09			
DI Name	Function Description of Digital Input (DI)	Trigger Method	Control Mode
TRQLM	In speed and position mode, when the DI is ON, the motor torque will be limited, and the limited torque command will be internal register or analog voltage command.	Level Triggered	PT, S

Setting value: 0x10			
DI Name	Function Description of Digital Input (DI)	Trigger Method	Control Mode
SPDLM	In torque mode, when the DI is ON, the motor speed will be limited, the limited speed command will be internal register or analog voltage command.	Level Triggered	T

Setting value: 0x14 ~ 0x15

DI Name	Function Description of Digital Input (DI)	Trigger Method	Control Mode
SPD0 SPD1	Internal speed command selection (1 ~ 4)	Level Triggered	S

Command No.	DI signal of CN1		Command Source			Content	Range
	SPD1	SPD0					
S1	OFF	OFF	Mode	S	External analog command	Voltage between V-REF and GND	+/-10 V
				Sz	None	Speed command is 0	0
S2	OFF	ON	Register parameter			P1-09	-60000 ~ +60000 r/min
S3	ON	OFF				P1-10	
S4	ON	ON				P1-11	

Setting value: 0x16 ~ 0x17

DI Name	Function Description of Digital Input (DI)	Trigger Method	Control Mode
TCM0 TCM1	Internal torque command selection (1 ~ 4)	Level Triggered	T

Command No.	DI signal of CN1		Command Source			Content	Range
	TCM1	TCM0					
T1	OFF	OFF	Mode	T	Analog command	Voltage between V-REF and GND	+/-10 V
				Tz	None	Torque command is 0	0
T2	OFF	ON	Register parameter			P1-12	-300 ~ +300 %
T3	ON	OFF				P1-13	
T4	ON	ON				P1-14	

Setting value: 0x18

DI Name	Function Description of Digital Input (DI)	Trigger Method	Control Mode
S-P	In position and speed mode, if the DI is OFF, it is in speed mode. And it is in position mode when the DI is ON.	Level Triggered	Dual mode

Setting value: 0x19			
DI Name	Function Description of Digital Input (DI)	Trigger Method	Control Mode
S-T	In speed and torque mode, if the DI is OFF, it is in speed mode. And it is in torque mode when the DI is ON.	Level Triggered	Dual mode

Setting value: 0x20			
DI Name	Function Description of Digital Input (DI)	Trigger Method	Control Mode
T-P	In position and torque mode, if the DI is OFF, it is in torque mode; if the DI is ON, then it is in position mode.	Level Triggered	Dual mode

Setting value: 0x21			
DI Name	Function Description of Digital Input (DI)	Trigger Method	Control Mode
EMGS	When this DI is ON, the motor stops urgently.	Level Triggered	All

Setting value: 0x22			
DI Name	Function Description of Digital Input (DI)	Trigger Method	Control Mode
NL(CWL)	Reverse inhibit limit (contact b)	Level Triggered	All

Setting value: 0x23			
DI Name	Function Description of Digital Input (DI)	Trigger Method	Control Mode
PL(CCWL)	Forward inhibit limit (contact b)	Level Triggered	All

Setting value: 0x25			
DI Name	Function Description of Digital Input (DI)	Trigger Method	Control Mode
TLLM	Torque limit - Reverse operation	Level Triggered	PT, S

Setting value: 0x26			
DI Name	Function Description of Digital Input (DI)	Trigger Method	Control Mode
TRLM	Torque limit - Forward operation	Level Triggered	PT, S

Setting value: 0x37			
DI Name	Function Description of Digital Input (DI)	Trigger Method	Control Mode
JOGU	When this DI is ON, the motor will JOG in forward direction.	Level Triggered	All

Setting value: 0x38			
DI Name	Function Description of Digital Input (DI)	Trigger Method	Control Mode
JOGD	When this DI is on, the motor will JOG in reverse direction.	Level Triggered	All

Setting value: 0x43, 0x44			
DI Name	Function Description of Digital Input (DI)	Trigger Method	Control Mode
GNUM0 GNUM1	Gear Ratio Selection 0 (Numerator) Gear Ratio Selection 1 (Numerator) 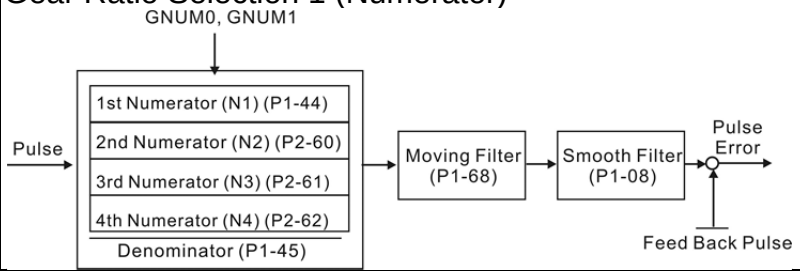	Level Triggered	PT

Setting value: 0x45			
DI Name	Function Description of Digital Input (DI)	Trigger Method	Control Mode
INHP	In position mode, when this DI is ON, the external pulse input command is not working.	Level Triggered	PT

Setting value: 0x48			
DI Name	Function Description of Digital Input (DI)	Trigger Method	Control Mode
TQP	Torque command source. Please refer to the settings of P2-66 Bit0.	Level Triggered	T

Setting value: 0x49			
DI Name	Function Description of Digital Input (DI)	Trigger Method	Control Mode
TQN	Torque command source. Please refer to the settings of P2-66 Bit0.	Level Triggered	T

NOTE

1) 11 ~ 17: Single control mode, 18 ~ 20: Dual control mode
2) When P2-10 to P2-17 and P2-36 is set to 0, DI has no function.

Table 7.2 Fucntion Description of Digital Output (DO)

Setting value: 0x01			
DO Name	Function Description of Digital Output (DO)	Trigger Method	Control Mode
SRDY	When the controlled and main circuit power is applied to the drive, this DO is ON if no alarm occurs.	Level Triggered	All

Setting value: 0x02			
DO Name	Function Description of Digital Output (DO)	Trigger Method	Control Mode
SON	When the servo is ON, this DO is ON if no alarm occurs.	Level Triggered	All

Setting value: 0x03			
DO Name	Function Description of Digital Output (DO)	Trigger Method	Control Mode
ZSPD	When the motor speed is slower than the setting speed of zero speed (P1-38), this DO is ON.	Level Triggered	All

Setting value: 0x04			
DO Name	Function Description of Digital Output (DO)	Trigger Method	Control Mode
TSPD	When the motor speed is faster than the target speed (P1-39), this DO is ON.	Level Triggered	All

Setting value: 0x05			
DO Name	Function Description of Digital Output (DO)	Trigger Method	Control Mode
TPOS	In position mode, when the deviation pulse number is smaller than the position range (the setting value of P1-54), this DO is ON.	Level Triggered	PT

Setting value: 0x06			
DO Name	Function Description of Digital Output (DO)	Trigger Method	Control Mode
TQL	When it is in torque limit, this DO is ON.	Level Triggered	All, except T, Tz

Setting value: 0x07			
DO Name	Function Description of Digital Output (DO)	Trigger Method	Control Mode
ALRM	When the alarm occurs, this DO is ON. (Except forward / reverse limit, communication error, undervoltage)	Level Triggered	All

Setting value: 0x08			
DO Name	Function Description of Digital Output (DO)	Trigger Method	Control Mode
BRKR	When the signal of brake control is output, adjust the setting of parameter P1-42 and P1-43. 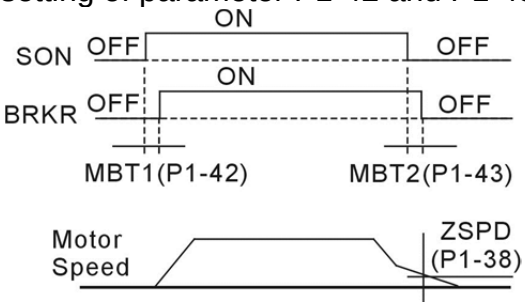 	Level Triggered	All

Setting value: 0x10			
DO Name	Function Description of Digital Output (DO)	Trigger Method	Control Mode
OLW	When reaching the overload setting, this DO is ON. t_{OL}= Overload allowable time of the servo x Setting value of P1-56, when the overload accumulative time exceeds t_{OL}, it will output pre-overload warning (OLW). However, if the overload accumulative time exceeds the overload allowable time of the servo, it will output pre-overload error (ALRM). For example: The setting value of pre-overload warning is 60% (P1-56=60). When the output average load of the servo drive is 200%, if the output time exceeds 8 seconds, the servo drive will show the overload alarm (AL.006). t_{OL}= The output average load of the servo exceeds 200% for 8 seconds x parameter setting value = 8sec x 60% = 4.8sec Result: When the output average load of the servo drive exceeds 200% for 4.8 seconds, this DO is ON. If it exceeds for 8 seconds, then, DO.ALRM is ON.	Level Triggered	All

Setting value: 0x11			
DO Name	Function Description of Digital Output (DO)	Trigger Method	Control Mode
WARN	Warning output (Forward / reverse limit, communication error, undervoltage)	Level Triggered	All

Setting value: 0x13			
DO Name	Function Description of Digital Output (DO)	Trigger Method	Control Mode
SNL (SCWL)	Software limit (Reverse limit)	Level Triggered	All

Setting value: 0x14			
DO Name	Function Description of Digital Output (DO)	Trigger Method	Control Mode
SPL (SCCWL)	Software limit (Forward limit)	Level Triggered	All

Setting value: 0x19			
DO Name	Function Description of Digital Output (DO)	Trigger Method	Control Mode
SP_OK	Speed completed output: In speed mode, when the deviation between the speed feedback and the command is smaller than the setting value of P1-47, then this DO is ON.	Level Triggered	S, Sz

NOTE

1) When P2-18 to P2-22 and P2-37 is set to 0, DI has no function.

Chapter 8 Communications

8.1 RS-485 & RS-232 Communication Hardware Interface

This servo drive supports the serial communication of RS-485 and RS-232. Communication function enables the servo drive to access and change parameters inside the system. However, RS-485 and RS-232 cannot be used at the same time. Parameter P3-05 can use RS-485 and RS-232 as the communication protocol. Followings are the wiring description.

RS-232

■ **Configuration**

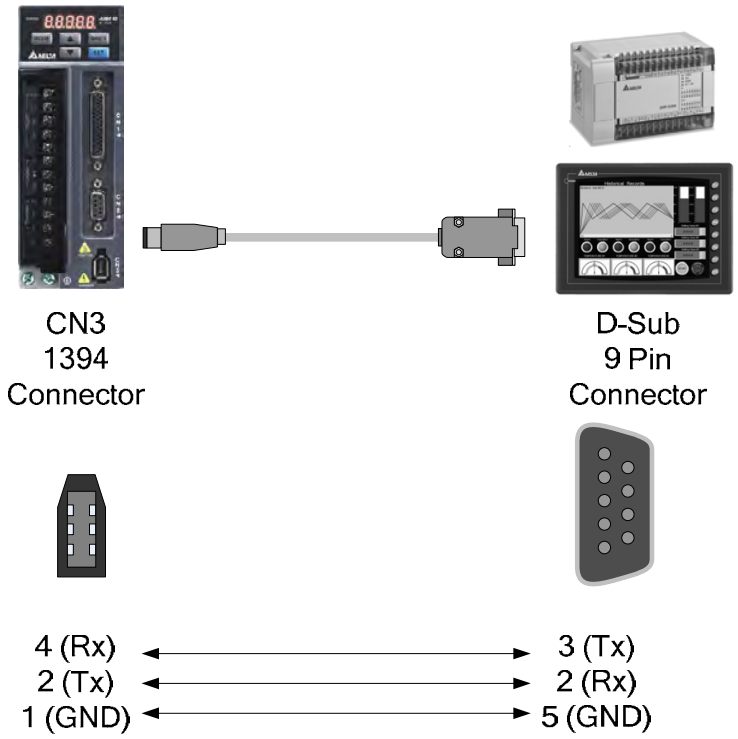

NOTE

1) 15-meter communication cable is suitable for less interference environment. If the transmission speed is over 38400bps, the length of communication cable should be shorter than 3 meters so as to ensure the accuracy of transmission.

2) Numbers shown in the above diagram represent the pin number of each connector.

RS-485

■ Configuration

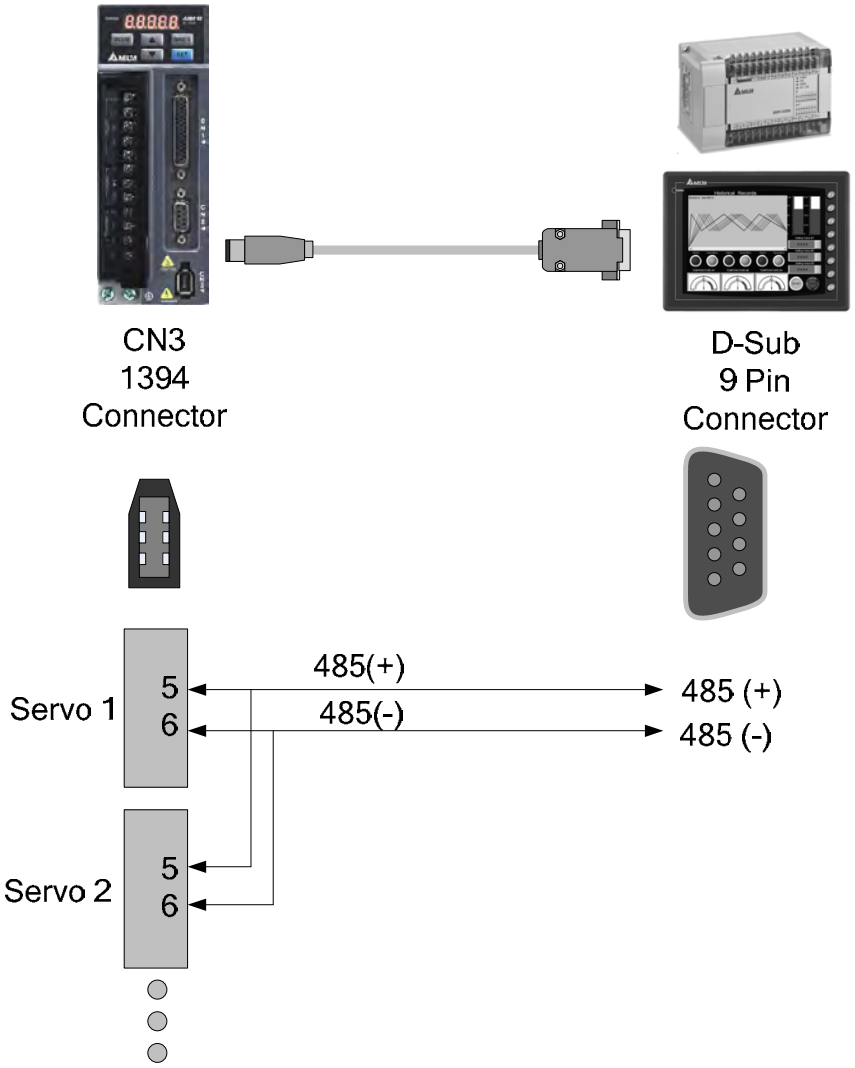

NOTE

1) 100 meters of communication cable is suitable for less interference environment. If the transmission speed is over 38400bps, the length of communication cable should not longer than 15 meters so as to ensure the accuracy of transmission.
2) Numbers shown in the above diagram represent the pin number of each connector.
3) Please use the power supply unit whose direct current is over 12 volt.
4) Using RS-485 can connect up to 32 servo drives at the same time. REPEATER can be used to connect more servo drives. 254 is the maximum.
5) Please refer to Chapter 3.5 for CN3 Pin Definition.

8.2 RS-485 / RS-232 Communication Parameter Settings

The following four parameters, P3-00 (Address Setting), P3-01 (Transmission Speed), P3-02 (Communication Protocol) and P3-05 (Communication Mechanism), are essential and must be set for the communication of the servo drive. The rest, such as P3-03 (Communication Error Disposal), P3-04 (Communication Timeout), P3-06 (Control Switch of Digital Input), P3-07 (Communication Response Delay Time) and P3-08 (Monitor Mode) is optional. Please refer to Chapter 7 of this user manual.

P3-00●	ADR	Address Setting		Address: 0300H 0301H
	Operation Interface:	Panel / Software	Communication	Related Section: Section 8.2
	Default:	0x7F		
	Control Mode:	ALL		
	Unit:	N/A		
	Range:	0x01 ~ 0x7F		
	Data Size:	16-bit		
	Format:	Hexadecimal		

Settings: The communication address setting is divided into Y, X (hexadecimal):

Display	0	0	Y	X
Range	-	-	0 ~ 7	0 ~ F

When using RS-232/RS-485 to communicate, one servo drive can only set one address. The duplicate address setting will cause abnormal communication.

This address represents the absolute address of the servo drive in communication network. It is also applicable to RS-232/485 and CAN bus.

When the communication address setting of MODBUS is set to 0xFF, the servo drive will automatically reply and receive data regardless of the address. However, P3-00 cannot be set to 0xFF.

P3-01	BRT	Transmission Speed		Address: 0302H 0303H
	Operation Interface:	Panel / Software	Communication	Related Section: Section 8.2
	Default:	0x0033		
	Control Mode:	ALL		
	Unit:	bps		
	Range:	0x0000 ~ 0x0055		
	Data Size:	16-bit		
	Format:	Hexadecimal		

Settings: The setting of transmission speed is divided into Z, Y, X (hexadecimal):

	0	Z	Y	X
COM Port	-	-	RS-485	RS-232
Range	0	0	0 ~ 5	0 ~ 5

Settings:
0: 4800
1: 9600
2: 19200
3: 38400
4: 57600
5: 115200

P3-02	PTL	Communication Protocol		Address: 0304H 0305H
	Operation Interface:	Panel / Software	Communication	Related Section: Section 8.2
	Default:	0x0066		
	Control Mode:	ALL		
	Unit:	N/A		
	Range:	0x0000 ~ 0x0088		
	Data Size:	16-bit		
	Format:	Hexadecimal		

Settings: The setting of transmission speed is divided into Z, Y, X (hexadecimal):

	0	Z	Y	X
COM Port	-	-	RS-485	RS-232
Range	0	0	0 ~ 8	0 ~ 8

0: 7, N, 2 (MODBUS, ASCII)

1: 7, E, 1 (MODBUS, ASCII)

2: 7, O,1 (MODBUS, ASCII)

3: 8, N, 2 (MODBUS, ASCII)

4: 8, E, 1 (MODBUS, ASCII)

5: 8, O, 1 (MODBUS, ASCII)

6: 8, N, 2 (MODBUS, RTU)

7: 8, E, 1 (MODBUS, RTU)

8: 8, O, 1 (MODBUS, RTU)

P3-05	**CMM**	**Communication Mechanism**		**Address: 030AH 030BH**
	Operation Interface:	Panel / Software	Communication	Related Section: Section 8.2
	Default:	1		
	Control Mode:	ALL		
	Unit:	N/A		
	Range:	0x00 ~ 0x01		
	Data Size:	16-bit		
	Format:	Hexadecimal		

Settings: RS-232 Communication interface selection

0: RS-232 via Modbus communication

1: RS-232 upon ASDA-Soft software

8.3 MODBUS Communication Protocol

There are two modes of MODBUS networks communication, ASCII (American Standard Code for information interchange) mode and RTU (Remote Terminal Unit) mode. Users could set the needed communication protocol via parameter P3-02. Apart from these two communication modes, this servo drive also supports function of 03H to access more than one data, 06H to write one character and 10H to write multiple characters. Please refer to the following descriptions.

■ Code Description:

ASCII Mode:

The so-called ASCII mode is using American Standard Code for Information Interchange (ASCII) to transmit the data. Between two stations (Master and Slave) to transmit data 64H, the master will send ′6′ which represented by 36H of ASCII code and ′4′ represented by 34H of ASCII code.

The following table shows the available hexadecimal characters and their corresponding ASCII code of digit 0 to 9 and characters A to F is as follows:

Character	‘0’	‘1’	‘2’	‘3’	‘4’	‘5’	‘6’	‘7’
ASCII code	30H	31H	32H	33H	34H	35H	36H	37H
Character	‘8’	‘9’	‘A’	‘B’	‘C’	‘D’	‘E’	‘F’
ASCII code	38H	39H	41H	42H	43H	44H	45H	46H

RTU Mode:

Every 8-bit of data is constituted by two 4-bits hexadecimal characters. If data 64H is transmitted between two stations, it will be transmitted directly, which is more efficient than ASCII mode.

■ Character Structure

Characters will be encoded into the following framing and transmitted in serial. The checking method of different bit is as the following.

10-bit character frame (For 7-bits character)

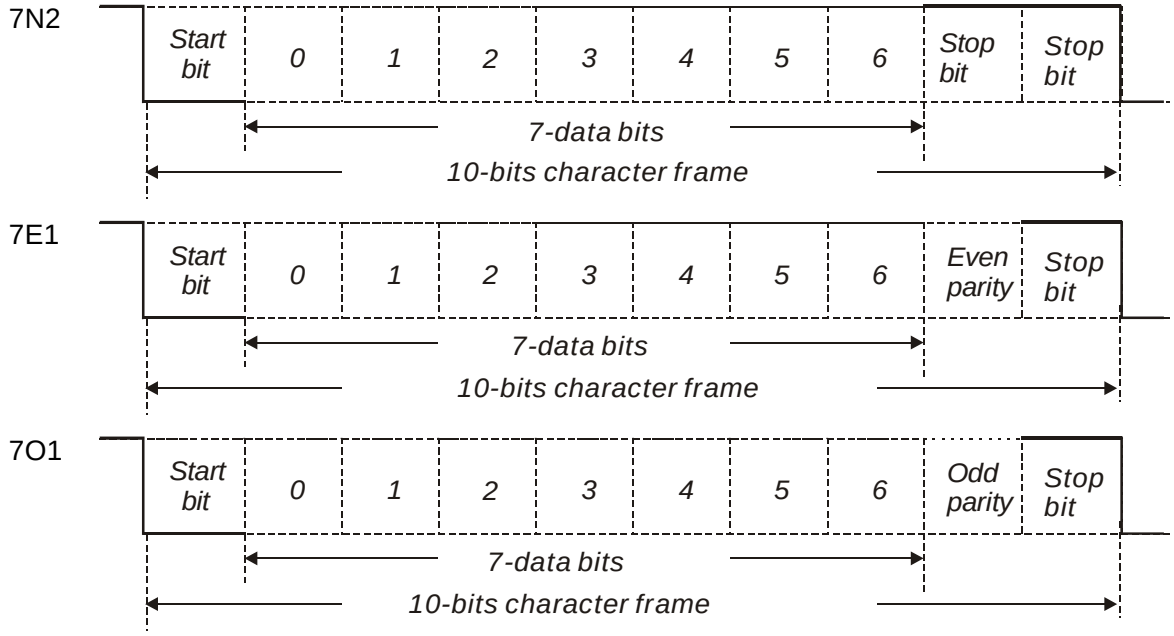

11-bit character frame (For 8-bits character)

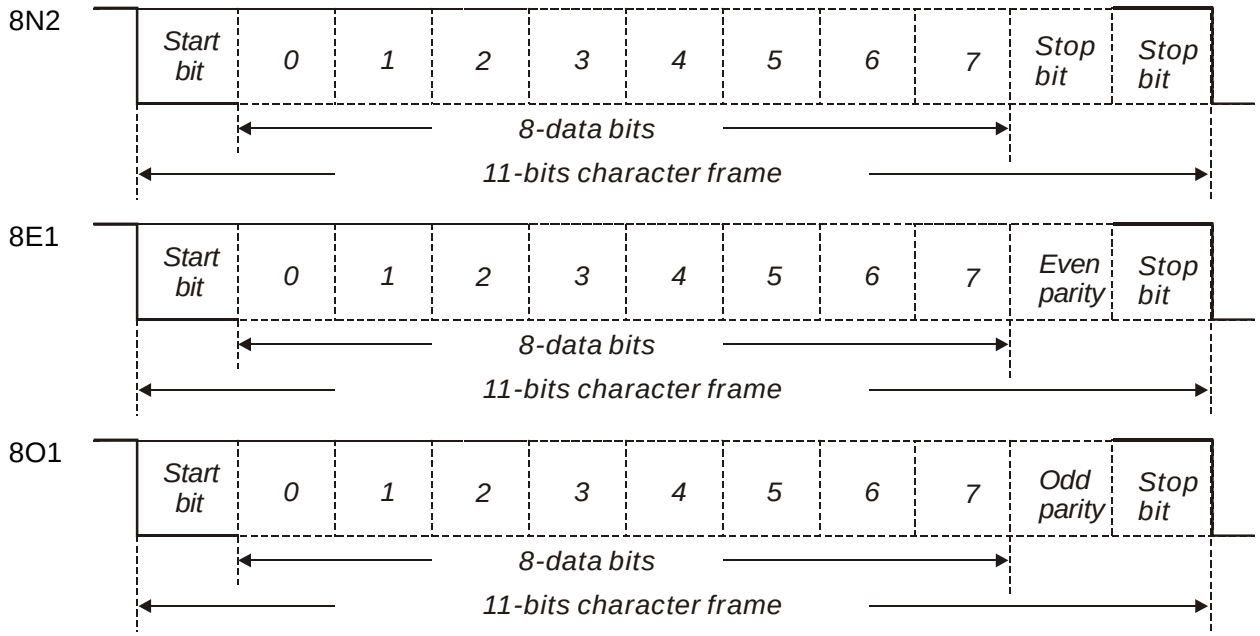

■ Communication Data Structure:

ASCII Mode:

Start	Start character': ' (3AH)
Slave address	Communication address: 1-byte consists of 2 ASCII codes
Function	Function code: 1-byte consists of 2 ASCII codes
DATA(n-1)	Data content: n word = n x 2-byte consists of n x 4 ASCII codes, n≤10
…….	
DATA(0)	
LRC	Error checking: 1-byte consists of 2 ASCII codes
End 1	End code 1: (0DH)(CR)
End 0	End code 0: (0AH)(LF)

The start character of communication in ASCII mode is colon ' : ' (ASCII is 3AH), ADR is the ASCII code of two characters. The end code is CR (Carriage Return) and LF (Line Feed). And the communication address, function code, data content, error checking LRC (Longitudinal Redundancy Check), etc are between the start character and end code.

RTU Mode:

Start	A silent interval of more than 10ms
Slave address	Communication address: 1-byte
Function	Function code: 1-byte
DATA(n-1)	Data content: n word = n x 2-byte, n≤10
…….	
DATA(0)	
CRC	Error checking: 1-byte
End 1	A silent interval of more than 10ms

The start of communication in RTU (Remote Terminal Unit) mode is a silent interval. The end of it is another silent interval. The communication address, function code, data content, error checking CRC (Cyclical Redundancy Check), etc are between the start and the end.

Example 1: function code 03H, access multiple words:

The Master issues the command to the 1st Slave and reads the continuous 2 words starting from the start address 0200H. In response message from the Slave, the content of starting address 0200H is 00B1H and the content of the 2nd data address 0201H is 1F40H. The maximum allowable data in one single access is 10. The calculation of LRC and CRC will be described in next chapter.

ASCII Mode:

Command message (Master):

Start	‘:’
Slave address	‘0’
	‘1’
Function	‘0’
	‘3’
Starting data address	‘0’
	‘2’
	‘0’
	‘0’
Number of data	‘0’
	‘0’
	‘0’
	‘2’
LRC Check	‘F’
	‘8’
End 1	(0DH)(CR)
End 0	(0AH)(LF)

Response message (Slave):

Start	‘:’
Slave address	‘0’
	‘1’
Function	‘0’
	‘3’
Number of data (In Byte)	‘0’
	‘4'
Contents of starting data address 0200H	‘0’
	‘0’
	‘B’
	‘1’
Contents of second data address 0201H	‘1’
	‘F’
	‘4’
	‘0’
LRC Check	‘E’
	‘8’
End 1	(0DH)(CR)
End 0	(0AH)(LF)

RTU Mode:

Command message (Master):

Slave address	01H
Function	03H
Starting data address	02H (High)
	00H (Low)
Number of data (In Word)	00H
	02H
CRC Check Low	C5H (Low)
CRC Check High	B3H (High)

Response message (Slave):

Slave address	01H
Function	03H
Number of data (In Byte)	04H
Contents of starting data address 0200H	00H (High)
	B1H (Low)
Contents of second data address 0201H	1FH (High)
	40H (Low)
CRC Check Low	A3H (Lower bytes)
CRC Check High	D4H (Upper bytes)

Please note that before and after the transmission in RTU mode, 10ms of silent interval is needed.

Example 2: function code 06H, write single word:

The Master issues command to the 1st Slave and writes data 0064H to address 0200H. The Slave sends the response message to the Master after the writing is completed. The calculation of LRC and CRC will be described in next chapter.

ASCII Mode:

Command message (Master):

Start	':'
Slave address	'0'
	'1'
Function	'0'
	'6'
Starting data address	'0'
	'2'
	'0'
	'0'
Content of data	'0'
	'0'
	'6'
	'4'
LRC Check	'9'
	'3'
End 1	(0DH)(CR)
End 0	(0AH)(LF)

Response message (Slave):

Start	':'
Slave address	'0'
	'1'
Function	'0'
	'6'
Starting data address	'0'
	'2'
	'0'
	'0'
Content of data	'0'
	'0'
	'6'
	'4'
LRC Check	'9'
	'3'
End 1	(0DH)(CR)
End 0	(0AH)(LF)

RTU Mode:

Command message (Master):

Slave Address	01H
Function	06H
Starting data address	02H (High)
	00H (Low)
Content of data	00H (High)
	64H (Low)
CRC Check Low	89H (Low)
CRC Check High	99H (High)

Response message (Slave):

Slave Address	01H
Function	06H
Starting data address	02H (High)
	00H (Low)
Content of data	00H (High)
	64H (Low)
CRC Check Low	89H (Low)
CRC Check High	99H (High)

Please note that before and after the transmission in RTU mode, 10ms of silent interval is needed.

Example 3: function code 10H, write multiple words:

The Master issues command to the 1st Slave and writes 0BB8H and 0000H to the starting address 0112H. That is to say, 0112H is written into 0BB8H and 0113H is written into 0000H. The maximum allowable data in one single access is 10. The Slave sends the response message to the Master after the writing is completed. The calculation of LRC and CRC will be described in next chapter.

ASCII Mode:

Command message (Master):

Start	‘:’
Slave Address	‘0’
	‘1’
Function	‘1’
	‘0’
Starting data address	‘0’
	‘1’
	‘1’
	‘2’
Number of data (In Word)	‘0’
	‘0’
	‘0’
	‘2’
Number of data (In Byte)	‘0’
	‘4’
Content of 1st data	‘0’
	‘B’
	‘B’
	‘8’
Content of 2nd data	‘0’
	‘0’
	‘0’
	‘0’
LRC Check	‘1’
	‘3’
End 1	(0DH)(CR)
End 0	(0AH)(LF)

Response message (Slave):

Start	‘:’
Slave Address	‘0’
	‘1’
Function	‘1’
	‘0’
Starting data address	‘0’
	‘1'
	‘1’
	‘2’
Content of data	‘0’
	‘0’
	‘0’
	‘2’
LRC Check	‘D’
	‘A’
End 1	(0DH)(CR)
End 0	(0AH)(LF)

RTU Mode:

Command message (Master):

Slave Address	01H
Function	10H
Starting data address	01H (High)
	12H (Low)
Number of data (In Word)	00H (High)
	02H (Low)
Number of data (In Byte)	04H
Content of 1st data	0BH (High)
	B8H (Low)
Content of 2nd data	00H (High)
	00H (Low)
CRC Check Low	FCH (Low)
CRC Check High	EBH (High)

Response message (Slave):

Slave Address	01H
Function	10H
Starting data address	01H (High)
	12H (Low)
Content of data (In Word)	00H (High)
	02H (Low)
CRC Check Low	E0H (Low)
CRC Check High	31H (High)

Please note that before and after the transmission in RTU mode, 10ms of silent interval is needed.

■ LRC and CRC transmission Error Checking:

The error checking in ASCII communication mode is LRC (Longitudinal Redundancy Check); CRC (Cyclical Redundancy Check) is for RTU communication mode. The algorithm of both is as the following.

LRC (ASCII mode):

STX	‘:’
ADR	‘7’
	‘F’
CMD	‘0’
	‘3’
Starting data address	‘0’
	‘5’
	‘C’
	‘4’
Number of data	‘0’
	‘0’
	‘0’
	‘1’
LRC Check	‘B’

	‘4’
End 1	(0DH)(CR)
End 0	(0AH)(LF)

The LRC algorithm is: add all byte, round down the carry and take 2′ s complement. For example, 7FH + 03H + 05H + C4H + 00H + 01H = 14CH, round down carry 1 and take 4CH.

2’s complement of 4CH is B4H.

CRC (RTU Mode):

The description of CRC is as the followings:

Step 1: Load a 16-bits register of FFFFH, which is called **CRC** register.

Step 2: (The low byte of CRC register) XOR (The first byte of command), and save the result in CRC register.

Step 3: Right move one bit. Check the least significant bit (LSB) of CRC register. If the bit is 1, then (CRC register) XOR (A001H).

Step 4: Return to Step 3 until Step 3 has been executed for 8 times. Go to Step 5.

Step 5: Repeat the procedure from Step 2 to Step 4 until all byte is processing. Get the result of CRC value.

Description: After calculating CRC value, fill in the low word of CRC first in command message, and then fill in the high word of CRC. For example, if the result of CRC algorithm is 3794H, fill in 94H in low word and then 37H in high word.

Command Message	
ADR	01H
CMD	03H
Starting data address	01H (High)
	01H (Low)
Number of data (In Word)	00H (High)
	02H (Low)
CRC Check Low	94H (Low)
CRC Check High	37H (High)

Example of CRC program:

Produce CRC in C language. This function needs two parameters:

unsigned char* data;

unsigned char length

The function returns the CRC value as a type of unsigned integer.

```
unsigned int crc_chk(unsigned char* data, unsigned char length) {
    int j;
    unsigned int reg_crc=0xFFFF;

    while( length-- ) {
        reg_crc^= *data++;
        for (j=0; j<8; j++ ) {
            if( reg_crc & 0x01 ) { /*LSB(bit 0 ) = 1 */
                reg_crc = (reg_crc >> 1)^0xA001;
            } else {
                reg_crc = (reg_crc>>1);
            }
        }
    }
    return reg_crc;
}
```

PC communication program example:

```
#include<stdio.h>
#include<dos.h>
#include<conio.h>
#include<process.h>
#define PORT 0x03F8    /*  the address of COM 1  */
#define THR 0x0000
#define RDR 0x0000
#define BRDL 0x0000
#define IER 0x0001
#define BRDH 0x0001
#define LCR 0x0003
#define MCR 0x0004
#define LSR 0x0005
#define MSR 0x0006
unsigned char rdat[60];
/* read 2 data from address 0200H of ASD with address 1 */
unsigned char tdat[60]={':','0','1','0','3','0','2','0','0','0','0','0','2','F','8','\r','\n'};
```

```
void main() {
int I;
outportb(PORT+MCR,0x08);            /*  interrupt enable  */
outportb(PORT+IER,0x01);                    /*  interrupt as data in  */
outportb(PORT+LCR,( inportb(PORT+LCR) | 0x80 ) );
/*  the BRDL/BRDH can be access as LCR.b7 == 1  */
outportb(PORT+BRDL,12);
outportb(PORT+BRDH,0x00);
outportb(PORT+LCR,0x06);            /* set prorocol
                                            <7,E,1> = 1AH,              <7,O,1> = 0AH
                                            <8,N,2> = 07H               <8,E,1> = 1BH
                                            <8,O,1> = 0BH
      */

for( I = 0; I<=16; I++ ) {
      while( !(inportb(PORT+LSR) & 0x20) );   /*  wait until THR empty  */
      outportb(PORT+THR,tdat[I]);                       /*  send data to THR  */
}
I = 0;
while( !kbhit() ) {
      if( inportb(PORT+LSR)&0x01 ) {  /*  b0==1, read data ready  */
            rdat[I++] = inportb(PORT+RDR); /*   read data from RDR  */
      }
}
}
```

8.4 Write-in and Read-out Communication Parameters

Please refer to Chapter 7, Parameters for all parameter details. And the descriptions of parameters which can be wrote or read through communication are as follows.

Parameters are divided into 5 groups, Group 0: Monitor Parameters, Group 1: Basic Parameters, Group 2: Extension Parameters, Group 3: Communication Parameters and Group 4: Diagnosis Parameters.

Write parameters via communication:

Parameters which can be written through communication include:
Group 0, except (P0-00~P0-01), (P0-08~P0-13) and (P0-46) Group 1 (P1-00~P1-76)

Group 2 (P2-00~P2-67)

Group 3 (P3-00~P3-11)

Group 4, except (P4-00~P4-04) and (P4-08~P4-09)

Please note that:

(P3-01) When change to a new communication speed, the next data will be written in a new transmission speed after setting the new value.

(P3-02) When change to the new communication protocol, the next data will be written with the new communication protocol after setting the new value.

(P4-05) JOG controls parameters of the servo. Please refer to Chapter 8, Parameters for the description.

(P4-06) Force to control output contact. This parameter is for DO (Digital Output) testing. Users can write 1, 2, 4, 8 and 16 to test DO1, DO2, DO3, DO4 and DO5 respectively. Please write 0 after the test so as to inform the servo drive that the test has been completed.

(P4-10) Adjustment function selection. Write 20 (= 14H in hexadecimal format) in parameter P2-08 first to enable the adjustment so as to change the value of P4-10.

(P4-11 ~ P4-21) This parameter is Offset Adjustment. Do not change the setting unless it is necessary. If it is necessary, please write 22 (= 16H, in hexadecimal format) in parameter P2-08 first to enable the function so as to change the value of (P4-11 ~ P4-21)

Read parameters through communication:

Parameters can be read through communication include:

Group 0 (P0-00~P0-46)
Group 1 (P1-00~P1-76)
Group 2 (P2-00~P2-67)
Group 3 (P3-00~P3-11)
Group 4 (P4-00~P4-23)

Chapter 9 Troubleshooting

9.1 Alarm of Servo Drive

Display	Alarm Name	Alarm Description	Corresponding DO	Servo Status
AL001	Over current	The current of the main circuit is 1.5 times more than the instantaneous current of the motor.	ALM	Servo Off
AL002	Over voltage	The voltage of the main circuit is higher than the standard voltage.	ALM	Servo Off
AL003	Under voltage	The voltage of the main circuit is lower than the standard voltage.	WARN	Servo Off
AL004	Motor Combination Error	The drive corresponds to the wrong motor.	ALM	Servo Off
AL005	Regeneration Error	Regeneration control is in error.	ALM	Servo Off
AL006	Overload	The motor and the drive is overload.	ALM	Servo Off
AL007	Over speed	The control speed of the motor exceeds the normal speed.	ALM	Servo Off
AL008	Abnormal Pulse Command	The input frequency of the pulse command is over the allowable value of the hardware interface.	ALM	Servo Off
AL009	Excessive Deviation of Position Command	The deviation of position command exceeds the allowable setting value.	ALM	Servo Off
AL011	Encoder Error	The encoder produces abnormal pulse.	ALM	Servo Off
AL012	Adjustment Error	When executing electrical adjustment, the adjusted value exceeds the allowable value.	ALM	Servo Off
AL013	Emergency Stop	Press the emergency stop button.	WARN	Servo Off
AL014	Reverse Limit Error	Activate the reverse limit switch.	WARN	Servo On
AL015	Forward Limit Error	Activate the forward limit switch.	WARN	Servo On

Display	Alarm Name	Alarm Description	Corresponding DO	Servo Status
AL016	IGBT Overheat	The temperature of IGBT is over high	ALM	Servo Off
AL017	Abnormal EEPROM	It is in error when DSP accesses EEPROM.	ALM	Servo Off
AL018	Abnormal signal output	The encoder output exceeds the rated output frequency.	ALM	Servo Off
AL019	Serial Communication Error	RS-232/485 communication is in error	ALM	Servo Off
AL020	Serial Communication Time Out	RS-232/485 communication time out	WARN	Servo On
AL022	Main Circuit Power Lack Phase	Only one single phase is inputted in the main circuit power.	WARN	Servo Off
AL023	Early Warning for Overload	Early Warning for Overload	WARN	Servo On
AL024	Encoder initial magnetic field error	The magnetic field of the encoder U, V, W signal is in error.	ALM	Servo Off
AL025	The Internal of the Encoder is in Error	The internal memory of the encoder and the internal counter are in error.	ALM	Servo Off
AL026	Unreliable internal data of the encoder	The error of the internal data has been detected for three times continuously.	ALM	Servo Off
AL027	The Internal of the Encoder is in Error	The internal reset of the encoder is in error	ALM	Servo Off
AL028	The Internal of the Encoder is in Error	The encoder, U, V, W signals are in error	ALM	Servo Off
AL029	The Internal of the Encoder is in Error	Internal address of the encoder is in error	ALM	Servo Off
AL030	Motor Crash Error	The motor crashes the equipment, reaches the torque of P1-57 and exceeds the time set by P1-58.	ALM	Servo Off
AL031	Incorrect wiring of the motor power line U, V, W, GND	Incorrect wiring of the motor power line U, V, W, GND or the connection between both is breakdown.	ALM	Servo Off

Display	Alarm Name	Alarm Description	Corresponding DO	Servo Status
AL035	Encoder temperature exceeds the protective range	Encoder temperature exceeds the protective range	ALM	Servo Off
AL048	Excessive encoder output error	The encoder output errors or the output pulse exceeds hardware tolerance.	ALM	Servo Off
AL067	Encoder temperature warning	Encoder temperature exceeds the warning level. (But it is still within the protective range.)	ALM	Servo Off
AL083	Servo drive outputs excessive current	When the output current from servo drive exceeds the setting level, ALE083 will be triggered to protect IGBT. This could avoid IGBT to be burned out because of the excessive current.	ALM	Servo Off
AL085	Regeneration error	Regeneration control is in error.	ALM	Servo Off
AL099	DSP Firmware Upgrade	EEPROM has not been reset after upgrading the firmware. The fault can be cleared when firstly set P2-08 to 30. Then set P2-08 to 28. And re-power on the drive.	WARN	Servo On
AL555	System Failure	DSP processing error	N/A	Do not Switch
AL880	System Failure	DSP processing error	N/A	Do not Switch

9.2 Causes and Corrective Actions

Alarm Display

AL001： Over current

Causes	Checking Method	Corrective Actions
The drive output is short-circuit	Check if the wiring between the motor and the drive is correct and see if the wire is short-circuited.	Eliminate short-circuit and avoid metal conductor being exposed.
The motor wiring is in error.	Check if the wiring steps are correct when connecting the motor to the drive.	Rewiring by following the wiring description from the user manual.
IGBT is abnormal	The temperature of the heat sink is abnormal	Send the drive back to the distributors or contact with Delta
The control parameter setting is in error.	Check if the setting value exceeds the default setting	Setting back to the default setting and then gradually adjust the value.
Unreasonable command	Check if the command doing reasonable acceleration time.	Less steep command used or filter applying to smooth command.

AL002：Over voltage

Causes	Checking Method	Corrective Actions
The input voltage of the main circuit is higher than the rated allowable voltage.	Use the voltmeter to see if the input voltage of the main circuit is within the rated allowable voltage value. (please refer to Chapter 10.1)	Apply to the correct power supply or serial voltage regulator.
Wrong power input (incorrect power system)	Use the voltmeter to see if the power system matches the specification.	Apply to the correct power supply or serial adaptor.
The hardware of the servo drive is damaged.	Use the voltmeter to see if the input voltage of the main circuit is within the rated allowable voltage value but still shows the error.	Send the drive back to the distributors or contact with Delta.

AL003：Under voltage

Causes	Checking Method	Corrective Actions
The input voltage of the main circuit is lower than the rated allowable voltage.	Check if the input voltage wiring of the main circuit is normal.	Re-confirm the voltage wiring.
No power supply for the main circuit.	Use the voltmeter to see if the voltage of the main circuit is normal.	Check the power switch
Wrong power input	Use the voltmeter to see if the power	Apply to the correct power

(incorrect power system)	system matches the specification.	supply or serial adaptor.

AL004：Motor combination error

Causes	Checking Method	Corrective Actions
The encoder is damaged.	The encoder is abnormal.	Change the motor
The encoder is loose.	Check the encoder connector.	Install the motor again.
Motor Combination Error	Connect to the right motor.	Change the motor

AL005：Regeneration error

Causes	Checking Method	Corrective Actions
Choose wrong regenerative resistor or does not connect to external regenerative resistor	Check the connection of regenerative resistor.	Calculate the value of the regenerative resistor again and correctly set the value of P1-52 and P1-53. If issue persists, please send the drive back to the distributors or contact with Delta.
Parameter P1-53 is not set to zero when the regenerative resistor is not in use.	Check if parameter P1-53 of regenerative resister is set to zero.	Set parameter P1-53 of regenerative resistor to zero when it is not applying.
Wrong parameter setting	Check the setting value of parameter P1-52 and P1-53.	Correctly reset the value of P1-52 and P1-53.

AL006：Overload

Causes	Checking Method	Corrective Actions
Over the rated loading of the drive and continuously excessive using	Set parameter P0-02 to 11 and see if the average torque [%] is over 100% all the time.	Increase the motor capacity or reduce the load.
The setting of the control system parameter is inappropriate.	1. Check if there is any mechanical vibration. 2. Check if the acceleration / deceleration constant are set too fast.	1. Adjust the gain value of the control circuit. 2. Slow down the acceleration / deceleration setting time.
Wrong wiring of the motor and the encoder.	Check the wiring of U, V, W and the encoder.	Correct wiring
The encoder of the motor is defective.	Send the drive back to the distributors or contact with Delta.	

AL007：Overspeed

Causes	Checking Method	Corrective Actions
Unreasonable command	Use the scope to check if the signal of analog voltage is abnormal.	Less steep command used or filter applying to smooth command.
Inappropriate parameter setting	Check if the setting of parameter P2-34 is too small (the condition of over-speed warning).	Correctly set parameter P2-34 (the condition of over-speed warning).

AL008：Abnormal pulse command

Causes	Checking Method	Corrective Actions
The pulse command frequency is higher than the rated input frequency.	Use the scope to check if the input frequency is over the rated input frequency.	Correctly set the input pulse frequency.

AL009：Excessive deviation of Position Command

Causes	Checking Method	Corrective Actions
Parameter P2-35 is set too small	Check the setting value of parameter P2-35 (The warning condition of excessive position deviation)	Increase the setting value of P2-35 (The warning condition of excessive position deviation)
The setting of the gain value is too small.	Check if the setting value is appropriate	Correctly adjust the gain value
The torque limit is too low.	Check the torque limit value	Correctly adjust the torque limit value
Excessive external load	Check the external load	Reduce the external load or evaluate the motor capacity again

AL011：Encoder error

Causes	Checking Method	Corrective Actions
Wrong wiring of the encoder	Check if the wiring follows the suggested wiring of the user manual.	Correct wiring
The encoder is loose	Check the drive connector of CN2 and encoder	Install the encoder again
Bad connection of the encoder	Check if the connection between CN2 of the drive and the encoder of the servo motor is loose	Reconnect the wiring
The encoder is damaged	Check if the motor is damaged	Change the motor

AL012：Adjustment error

Causes	Checking Method	Corrective Actions
The analog input contact is incorrectly set back to zero	Measure if the voltage of the analog input contact is the same as the ground voltage	Correctly ground the analog input contact
The detection device is damaged	Reset the power supply	If issue persists, send the drive back to the distributors or contact with Delta.

AL013：Emergency stop

Causes	Checking Method	Corrective Actions
Press the emergency stop button	Check if the emergency stop button is enabled.	Activate emergency stop

AL014：Reverse limit error

Causes	Checking Method	Corrective Actions
Reverse limit switch is activated.	Check if the limit switch is enabled.	Enable the reverse limit switch
The servo system is unstable.	Check the control parameter and inertia ratio	Re-adjust the parameter or evaluate the motor capacity.

AL015：Forward limit error

Causes	Checking Method	Corrective Actions
Forward limit switch is activated.	Check if the limit switch is enabled.	Enable the forward limit switch
The servo system is unstable.	Check the control parameter and inertia ratio	Re-adjust the parameter or evaluate the motor capacity.

AL016：IGBT Overheat

Causes	Checking Method	Corrective Actions
Over the rated loading of the drive and continuously excessive using	Check if it is overloading or the motor current is too high.	Increase the motor capacity or reduce the load.
The drive output is short-circuit	Check the drive output wiring	Correct wiring

AL017：Abnormal EEPROM

Causes	Checking Method	Corrective Actions
It is in error when DSP accesses EEPROM.	Press the SHIFT Key on the panel and it shows EXGAB. X = 1, 2, 3 G = group code of the parameter AB = hexadecimal of the parameter	The fault occurs when applying to the power. It means one of the parameters is over the reasonable range. Please re-power on after

	If it shows E320A, it means it is parameter P2-10; If it shows E3610, it means it is parameter P6-16. Please check the parameter.	adjusting. The fault occurs in normal operation. It means it is in error when writing the parameter. The alarm can be cleared by DI.ARST.
Abnormal hidden parameter	Press the SHIFT Key on the panel and it shows E100X	The fault occurs in parameter reset. The setting of the drive is wrong. Please set the correct type of the drive.
Data in ROM is damaged.	Press the SHIFT Key on the panel and it shows E0001	The fault occurs when it is servo-on. Usually it is because the data in ROM is damaged or there is no data in ROM. Please send the drive back to the distributors or contact with Delta.

AL018：Abnormal signal output

Causes	Checking Method	Corrective Actions
The encoder is in error and cause the abnormal signal output	Check the fault records (P4-00~P4-05). See if the alarm exists with the encoder error (AL011, AL024, AL025, AL026)	Conduct the corrective actions of AL.011, AL.024, AL.025, AL.026
The output pulse exceeds the hardware allowable range.	Check if the following conditions produce: P1-76 < Motor Speed or $\frac{\text{Motor Speed}}{60} \times \text{P1}-46 \times 4 > 19.8 \times 10^6$	Correctly set parameter P1-76 and P1-46: P1-76 > Motor Speed or $\frac{\text{Motor Speed}}{60} \times \text{P1}-46 \times 4 < 19.8 \times 10^6$

AL019：Serial communication error

Causes	Checking Method	Corrective Actions
Improper setting of the communication parameter	Check the setting value of communication parameter	Correctly set the parameter value
Incorrect communication address	Check the communication address	Correctly set the communication address
Incorrect communication value	Check the accessing value	Correctly set the value

AL020：Serial communication time out

Causes	Checking Method	Corrective Actions
Improper setting of the time-out parameter	Check the parameter setting	Correctly set the value

The drive hasn′t received the communication command for a long time.	Check if the communication cable is loose or broken.	Correct wiring

AL022：Main circuit power lack phase

Causes	Checking Method	Corrective Actions
The main circuit power is abnormal	Check if RST power cable is loose or does not connect to the power. This alarm occurs when no power connects to single phase servo drive	Make sure it applies to the power. If issue persists, please send the drive back to the distributors or contact with Delta.

AL023：Early warning for overload

Causes	Checking Method	Corrective Actions
Early warning for overload	1. Check if it is used in overload condition. 2. Check if the value of parameter P1-56 is set to small.	1. Please refer to the corrective actions of AL006. 2. Please increase the setting value of parameter P1-56. Or set the value over 100 and deactivate the overload warning function.

AL024：Encoder initial magnetic field error

Causes	Checking Method	Corrective Actions
The initial magnetic field of the encoder is in error (Signal, U, V, W of the encoder magnetic field is in error.)	1. Check if the servo motor is properly grounded. 2. Check if the encoder cable separates from the power supply or the high-current circuit to avoid the interference. 3. Check if the shielding cables are used in the wiring of the encoder.	If issue persists, please send the drive back to the distributors or contact with Delta.

AL025：The internal of the encoder is in error

Causes	Checking Method	Corrective Actions
The internal of the encoder is in error. (The internal memory and the internal counter are in error)	1. Check if the servo is properly grounded. 2. Check if the encoder cable separates from the power supply or the high-current circuit to avoid the interference. 3. Check if the shielding cables are	1. Please connect the UVW connector (color green) to the heat sink of the servo drive. 2. Please check if the encoder cable separates from the power supply or

	used in the wiring of the encoder.	the high-current circuit. 3. Please use shielding mesh. 4. If issue persists, please send the drive back to the distributors or contact with Delta.

AL026：Unreliable internal data of the encoder

Causes	Checking Method	Corrective Actions
The encoder is in error. (Errors occur in the internal data for three times continuously)	1. Check if the servo is properly grounded. 2. Check if the encoder cable separates from the power supply or the high-current circuit to avoid the interference. 3. Check if the shielding cables are used in the wiring of the encoder.	1. Please connect the UVW connector (color green) to the heat sink of the servo drive. 2. Please check if the encoder cable separates from the power supply or the high-current circuit. 3. Please use shielding mesh. 4. If issue persists, please send the drive back to the distributors or contact with Delta.

AL027：The internal of the encoder is in error

Causes	Checking Method	Corrective Actions
The internal reset of the encoder is in error.	1. Check if the servo is properly grounded. 2. Check if the encoder cable separates from the power supply or the high-current circuit to avoid the interference. 3. Check if the shielding cables are used in the wiring of the encoder.	1. Please connect the UVW connector (color green) to the heat sink of the servo drive. 2. Please check if the encoder cable separates from the power supply or the high-current circuit. 3. Please use shielding mesh. 4. If issue persists, please send the drive back to the distributors or contact with Delta.

AL028：The internal of the encoder is in error

Causes	Checking Method	Corrective Actions
The encoder U, V, W signals are in error.	1. Check if the servo is properly grounded. 2. Check if the encoder cable	1. Please connect the UVW connector (color green) to the heat sink of the servo

	separates from the power supply or the high-current circuit to avoid the interference. 3. Check if the shielding cables are used in the wiring of the encoder.	drive. 2. Please check if the encoder cable separates from the power supply or the high-current circuit. 3. Please use shielding mesh. 4. If issue persists, please send the drive back to the distributors or contact with Delta.

AL029：The internal of the encoder is in error

Causes	Checking Method	Corrective Actions
The internal address of the encoder is in error.	1. Check if the servo is properly grounded. 2. Check if the encoder cable separates from the power supply or the high-current circuit to avoid the interference. 3. Check if the shielding cables are used in the wiring of the encoder.	1. Please connect the UVW connector (color green) to the heat sink of the servo drive. 2. Please check if the encoder cable separates from the power supply or the high-current circuit. 3. Please use shielding mesh. 4. If issue persists, please send the drive back to the distributors or contact with Delta.

AL030：Motor crash error

Causes	Checking Method	Corrective Actions
Motor Crash Error	1. Check if P1-57 is enabled. 2. Check if P1-57 is set too small and the time of P1-58 is set too short.	1. If it is enabled by mistake, please set P1-57 to zero. 2. According to the actual torque setting, if the value is set too small, the alarm will be triggered by mistake. However, if the value is set too big, it will lose the function of protection.

AL031：Incorrect wiring of the motor power line U, V, W

Causes	Checking Method	Corrective Actions
The wiring of U, V, W of the motor is incorrect connected or the connection is breakdown.	Check if U, V, W of the motor is incorrect connected or the connection is breakdown.	Follow the user manual to correctly wire U, V, and W and make sure it is grounded.

AL035：Encoder temperature exceeds the protective range

Causes	Checking Method	Corrective Actions
Encoder temperature is over 120°C.	Check if the environment temperature is excessive or the motor temperature is over 105°C.	Try to reduce operating temperature.

AL048：Excessive encoder output error

Causes	Checking Method	Corrective Actions
Encoder error causes abnormal encoder output.	Exam error recording (P4-00 ~ P4-05) to check if encoder error also occurs. (AL011, AL024, AL025, AL026)	Please refer to the corrective actions of AL011, AL024, AL025 and AL026
The output pulse exceeds hardware tolerance.	Check if following conditions occur: P1-76 < Motor speed or $\frac{\text{Motor speed}}{60} \times P1-46 \times 4 > 19.8 \times 10^6$	Correctly set P1-76 and P1-46: P1-76 > Motor speed and $\frac{\text{Motor speed}}{60} \times P1-46 \times 4 > 19.8 \times 10^6$

AL067：Encoder temperature warning

Causes	Checking Method	Corrective Actions
Encoder temperature is over 100°C.	Check if the operating temperature is excessive or the motor temperature is over 85°C.	Try to reduce operating temperature.

AL083：Servo Drive Outputs Excessive Current

Causes	Checking Method	Corrective Actions
UVW cable is short-circuited	Check the configuration of motor power cable and connector cable. See if the metal wire is exposed or AWG is worn and causes short circuit of UVW cable.	Replace by new UVW cable and avoid the metal conductor being exposed so as to eliminate short-circuit.
Wrong motor wiring	1. If applying non-standard power cable recommended by Delta, please check if the wiring sequence of UVW cable is correct.	Please refer to the description of wiring in Chapter 3 and conduct the wiring again.

	2. Check if there is any problem of lack phase when connecting UVW from servo to motor (unconnected or wrong connection)	
Analog signal (GND) from servo drive is interfered	Check if the GND of analog signal is misconnected to other signal.	Please refer to Chapter 3 and conduct the wiring again. GND of analog signal cannot be grounded with other signals.

AL085：Regeneration error

Causes	Checking Method	Corrective Actions
Choose wrong regenerative resistor or does not connect to external regenerative resistor	Check the connection of regenerative resistor.	Calculate the value of the regenerative resistor again and correctly set the value of P1-52 and P1-53. If issue persists, please send the drive back to the distributors or contact with Delta.
Parameter P1-53 is not set to zero when the regenerative resistor is not in use.	Check if parameter P1-53 of regenerative resister is set to zero.	Set parameter P1-53 of regenerative resistor to zero when it is not applying.
Wrong parameter setting	Check the setting value of parameter P1-52 and P1-53.	Correctly reset the value of P1-52 and P1-53.

AL099：DSP firmware upgrade

Causes	Checking Method	Corrective Actions
Upgrade DSP firmware	Check if the firmware is upgraded.	Firstly set P2-08 to 30. Then set P2-08 to 28, the alarm will be cleared when re-power on.

AL555：System failure

Causes	Checking Method	Corrective Actions
DSP processing error	N/A	If AL555 occurs, do not do any anything and send the drive back to the distributors or contact with Delta.

AL880：System failure

Causes	Checking Method	Corrective Actions
DSP processing error	N/A	If AL880 occurs, do not do any anything and send the drive back to the distributors or contact with Delta.

9.3 Corrective Actions after the Alarm Occurs

AL001	Over current	Turn DI.ARST on to clear the alarm
AL002	Over voltage	Turn DI.ARST on to clear the alarm
AL003	Under voltage	The alarm can be cleared after the voltage returns to normal.
AL004	The magnetic field of the motor is abnormal	The alarm can be cleared after re-power on.
AL005	Regeneration error	Turn DI.ARST on to clear the alarm
AL006	Overload	Turn DI.ARST on to clear the alarm
AL007	Excessive speed deviation	Turn DI.ARST on to clear the alarm
AL008	Abnormal pulse command	Turn DI.ARST on to clear the alarm
AL009	Excessive deviation of position control	Turn DI.ARST on to clear the alarm
AL011	Encoder error	The alarm can be cleared after re-power on.
AL012	Adjustment error	The alarm can be cleared when removing CN1 wiring and execute auto adjustment.
AL013	Emergency stop	The alarm can be cleared automatically after turning DI.EMGS off
AL014	Reverse limit error	Turn DI.ARST on or Servo Off to clear the alarm. The alarm also can be cleared when the motor operates backwards.
AL015	Forward limit error	Turn DI.ARST on or Servo Off to clear the alarm. The alarm also can be cleared when the motor operates backwards.
AL016	The temperature of IGBT is abnormal error	Turn DI.ARST on to clear the alarm
AL017	Abnormal EEPROM	If the alarm occurs, then parameter reset is a must. And re-servo on again. If it happens during the operation, please turn DI.ARST on to clear the alarm.
AL018	Abnormal signal	Turn DI.ARST on to clear the alarm
AL019	Serial communication error	Turn DI.ARST on to clear the alarm
AL020	Serial communication time out	Turn DI.ARST on to clear the alarm
AL022	Main circuit power leak phase	Turn DI.ARST on to clear the alarm

AL023	Early warning for overload	Turn DI.ARST on to clear the alarm
AL024	Encoder initial magnetic field error	The alarm can be cleared after re-power on.
AL025	The internal of the encoder is in error	The alarm can be cleared after re-power on.
AL026	The encoder is in error	The alarm can be cleared after re-power on.
AL027	The internal of the encoder is in error	The alarm can be cleared after re-power on.
AL028	The internal of the encoder is in error	The alarm can be cleared after re-power on.
AL029	The internal of the encoder is in error	The alarm can be cleared after re-power on.
AL030	Motor crash error	Turn DI.ARST on to clear the alarm
AL031	Incorrect wiring of the motor power line U, V, W, GND	The alarm can be cleared after re-power on.
AL035	Encoder temperature exceeds the protective range	The alarm can be cleared after re-power on.
AL048	Excessive encoder output error	Turn DI.ARST on to clear the alarm
AL067	Encoder temperature warning	The alarm will be cleared when the temperature back to normal.
AL083	Servo drive outputs excessive current	Turn DI.ARST on to clear the alarm
AL085	Regeneration error	Turn DI.ARST on to clear the alarm
AL099	DSP firmware upgrade	Firstly set P2-08 to 30. Then set it to 28. And the alarm will be cleared after re-power on.
AL555	DSP processing error	N/A
AL880	DSP processing error	N/A

Chapter 10 Specifications

10.1 Specifications of Servo Drives (ASDA-B2 Series)

ASDA-B2 Series			100W	200W	400W	750W	1kW	1.5kW	2kW	3kW
			01	02	04	07	10	15	20	30
Power	Phase / Voltage		Three-phase: 170 ~ 255 VAC, 50/60 Hz ±5 % Single-phase: 200 ~ 255 VAC, 50/60Hz ±5 %						Three-phase 170 ~ 255 VAC 50/60 Hz ±5 %	
Power	Input Current (3PH) Unit: Arms		0.7	1.11	1.86	3.66	4.68	5.9	8.76	9.83
Power	Input Current (1PH) Unit: Arms		0.9	1.92	3.22	6.78	8.88	10.3	-	-
Power	Continuous Output Current Unit: Arms		0.9	1.55	2.6	5.1	7.3	8.3	13.4	19.4
Cooling Method			Natural cooling				Fan cooling			
Encoder Resolution / Feedback Resolution			17-bit (160000 p/rev)							
Main Circuit Control			SVPWM Control							
Control Mode			Manual / Auto							
Regenerative Resistor			None		Built-in					
Position Control Mode	Max. Input Pulse Frequency		Line driver: 500 K (low-speed) / 4 Mpps (high-speed) Open collector: 200 Kpps							
Position Control Mode	Pulse Type		Pulse + Symbol, A phase + B phase, CCW pulse + CW pulse							
Position Control Mode	Command Source		External pulse							
Position Control Mode	Smoothing Strategy		Low-pass filter							
Position Control Mode	E-gear Ratio		E-gear ratio: N/M time(s). The limit is: (1/50 < N/M < 25600) N : 1 ~ (2^{26}-1) / M : 1 ~ (2^{31}-1)							
Position Control Mode	Torque Limit		Parameter settings							
Position Control Mode	Feed Forward Compensation		Parameter settings							
Speed Control Mode	Analog Command Input	Voltage Range	0 ~ ±10 V_{DC}							
Speed Control Mode	Analog Command Input	Input Resistance	10KΩ							
Speed Control Mode	Analog Command Input	Time Constant	2.2 us							
Speed Control Mode	Speed Control Range*1		1:5000							
Speed Control Mode	Command Source		External analog command / Register							
Speed Control Mode	Smoothing Strategy		Low-pass and S-curve filter							

ASDA-B2 Series			100W	200W	400W	750W	1kW	1.5kW	2kW	3kW
			01	02	04	07	10	15	20	30
Speed Control Mode	Torque Limit		Via parameter setting of analog input							
	Bandwidth		Maximum 550 Hz							
	Speed Accuracy*2		0.01 % or less at 0 to 100 % load fluctuation							
			0.01 % or less at ±10 % power fluctuation							
			0.01% or less at 0 ~ 50 ℃ ambient temperature fluctuation							
Torque Control Mode	Analog Command Input	Voltage Range	0 ~ ±10 VDC							
		Input Resistance	10KΩ							
		Time Constant	2.2 us							
	Command Source		External analog command / Register							
	Smoothing Strategy		Low-pass filter							
	Speed Limit		Via parameter setting or analog input							
Analog Monitor Output			Monitor signal can be set by parameters (Output voltage range: ±8V)							
Digital Input/Output		Input	Servo on, Fault reset, Gain switch, Pulse clear, Zero clamp, Command input reverse control, Torque limit, Speed limit, Speed command selection, Speed / position mode switching, Speed / torque mode switching, Torque / position mode switching, Emergency stop, Positive/negative limit, Forward/reverse operation torque limit, Forward / reverse JOG input, E-gear N selection, Pulse input prohibition							
		Output	A, B, Z Line Driver output							
			Servo on, Servo ready, Zero speed, Target speed reached, Target position reached, Torque limiting, Servo alarm, Brake control, Early warning for overload, Servo warning							
Protective Funciton			Over current, Overvoltage, Under voltage, Overheat, Overload, Excessive speed deviation, Excessive position deviation, Encoder error, Regenerative error, Communication error, Register error, Short-circuit protection of terminal U, V, W and CN1, CN2, CN3							
Communication Interface			RS-232 / RS-485							
Environment	Installation Site		Indoors (avoid the direct sunlight), no corrosive fog (avoid fume, flammable gas and dust)							
	Altitude		Altitude 1000 m or lower above sea level							
	Atmospheric pressure		86 kPa ~ 106 kPa							
	Operating Temperature		0 °C ~ 55 °C (If operating temperature is above 45°C, forced cooling will be required)							
	Storage Temperature		-20 °C ~ 65 °C							
	Humidity		Less than 0 ~ 90% RH (non-condensing)							
	Vibration		9.80665m/s^2 (1 G) less than 20 Hz, 5.88m/ s^2 (0.6 G) 20 to 50 Hz							
	IP Rating		IP20							
	Power System		TN system*4							

	Approvals	IEC/EN 61800-5-1, UL508C

Note:

*1 When it is in rated load, the speed ratio is: the minimum speed (smooth operation) /rated speed.
*2 When the command is the rated speed, the velocity correction ratio is: (rotational speed with no load – rotational speed with full load) / rated speed.
*3 TN system: The neutral point of the power system connects to the ground directly. The exposed metal components connect to the ground via the protective earth conductor.
4 Please refer to section 10.4 for overload features.

10.2 Specifications of Servo Motors (ECMA Series)

Low Inertia Servo Motors

ECMA	C△04	C△06		C△08		C△09		C△10		C△13
	01	02	04□ S	04	07	07	10	10	20	30
Rated power (kW)	0.1	0.2	0.4	0.4	0.75	0.75	1.0	1.0	2.0	3.0
Rated torque (N-m) *1	0.32	0.64	1.27	1.27	2.39	2.38	3.18	3.18	6.37	9.55
Max. torque (N-m)	0.96	1.92	3.82	3.82	7.16	7.14	8.78	9.54	19.11	28.65
Rated speed (r/min)	3000									
Max. speed (r/min)	5000					3000		5000		4500
Rated current (A)	0.90	1.55	2.60	2.60	5.10	3.66	4.25	7.30	12.05	17.2
Max. instantaneous current (A)	2.70	4.65	7.80	7.74	15.3	11	12.37	21.9	36.15	47.5
Max. power pwer second (kW/s)	27.7	22.4	57.6	24.0	50.4	29.6	38.6	38.1	90.6	71.8
Rotor inertia ($\times 10^{-4}$kg.m^2)	0.037	0.177	0.277	0.68	1.13	1.93	2.62	2.65	4.45	12.7
Mechanical constant (ms)	0.75	0.80	0.53	0.74	0.63	1.72	1.20	0.74	0.61	1.11
Torque constant-KT (N-m/A)	0.36	0.41	0.49	0.49	0.47	0.65	0.75	0.44	0.53	0.557
Voltage constant-KE (mV/(r/min))	13.6	16.0	17.4	18.5	17.2	24.2	27.5	16.8	19.2	20.98
Armature resistance (Ohm)	9.30	2.79	1.55	0.93	0.42	1.34	0.897	0.20	0.13	0.0976
Armature inductance (mH)	24.0	12.07	6.71	7.39	3.53	7.55	5.7	1.81	1.50	1.21
Electric constant (ms)	2.58	4.30	4.30	7.96	8.36	5.66	6.35	9.30	11.4	12.4
Insulation class	Class A (UL), Class B (CE)									
Insulation resistance	>100MΩ, DC 500V									
Insulation strength	1.8k Vac, 1 sec									
Weight - without brake (kg)	0.5	1.2	1.6	2.1	3.0	2.9	3.8	4.3	6.2	7.8
Weight - with brake (kg)	0.8	1.5	2.0	2.9	3.8	3.69	5.5	4.7	7.2	9.2
Radial max. loading (N)	78.4	196	196	245	245	245	245	490	490	490
Axial max. loading (N)	39.2	68	68	98	98	98	98	98	98	98
Max. power per second (kW/s) (with brake)	25.6	21.3	53.8	22.1	48.4	29.3	37.9	30.4	82.0	65.1
Rotor inertia ($\times 10^{-4}$kg.m^2) (with brake)	0.04	0.19	0.30	0.73	1.18	1.95	2.67	3.33	4.95	14.0
Mechanical constant (ms) (with brake)	0.81	0.85	0.57	0.78	0.65	1.74	1.22	0.93	0.66	1.22
Brake holding torque [Nt-m (min)] *2	0.3	1.3	1.3	2.5	2.5	2.5	2.5	8.0	8.0	10.0
Brake power consumption (at 20°C) [W]	7.2	6.5	6.5	8.2	8.2	8.2	8.2	19.4	19.4	19.0

ECMA	C△04	C△06		C△08		C△09		C△10		C△13
	01	02	04□ S	04	07	07	10	10	20	30
Brake release time [ms (Max)]	5	10	10	10	10	10	10	10	10	10
Brake pull-in time [ms (Max)]	25	70	70	70	70	70	70	70	70	70
Vibration grade (um)	15									
Operating temperature	0 ~ 40 °C									
Storage temperature	-10 ~ 80 °C									
Operating humidity	20% to 90% RH (non-condensing)									
Storage humidity	20% to 90% RH (non-condensing)									
Vibration capacity	2.5 G									
IP rating	IP65 (when waterproof connectors are used, or when an oil seal is used to be fitted to the rotating shaft (an oil seal model is used))									
Approvals	CE c UL us									

Note:

*1 The rated torque is the continuous permissible torque between 0~40˚C operating temperature which is suitable for the following heat sink dimension.

ECMA-__04 / 06 / 08 : 250mm x 250mm x 6mm
ECMA-__10 : 300mm x 300mm x 12mm
ECMA-__13 : 400mm x 400mm x 20mm
ECMA-__18 : 550mm x 550mm x 30mm
Material: Aluminum – F40, F60, F80, F100, F130, F180

*2 The built-in brake of the servo motor is for remaining the item in stop status. Do not use it to decelerate or as the dynamic brake.

Medium / High Inertia Servo Motors

ECMA	E△13				E△18			G△13		
	05	10	15	20	20	30	35	03	06	09
Rated power (kW)	0.5	1.0	1.5	2.0	2.0	3.0	3.8	0.3	0.6	0.9
Rated torque (N-m) *1	2.39	4.77	7.16	9.55	9.55	14.32	16.71	2.86	5.73	8.59
Max. torque (N-m)	7.16	14.32	21.48	28.65	28.65	42.97	50.13	8.59	17.19	21.48
Rated speed (r/min)	2000							1000		
Max. speed (r/min)	3000							2000		
Rated current (A)	2.9	5.6	8.3	11.01	11.22	16.1	19.2	2.5	4.8	7.5
Max. instantaneous current (A)	8.7	16.8	24.81	33.0	33.66	48.3	57.6	7.44	14.49	22.5
Max. power per second (kW/s)	7.0	27.1	45.9	62.5	26.3	37.3	50.8	10.0	39.0	66.0
Rotor inertia ($\times 10^{-4}$kg.m^2)	8.17	8.41	11.18	14.59	34.68	54.95	54.95	8.17	8.41	11.18
Mechanical constant (ms)	1.91	1.51	1.10	0.96	1.62	1.06	1.08	1.84	1.40	1.06
Torque constant-KT (N-m/A)	0.83	0.85	0.87	0.87	0.85	0.89	0.87	1.15	1.19	1.15
Voltage constant-KE (mV/(r/min))	30.9	31.9	31.8	31.8	31.4	32.0	32	42.5	43.8	41.6
Armature resistance (Ohm)	0.57	0.47	0.26	0.174	0.119	0.052	0.052	1.06	0.82	0.43
Armature inductance (mH)	7.39	5.99	4.01	2.76	2.84	1.38	1.38	14.29	11.12	6.97
Electric constant (ms)	12.96	12.88	15.31	15.86	23.87	26.39	26.39	13.55	13.50	16.06
Insulation class	Class A (UL), Class B (CE)									
Insulation resistance	>100 MΩ, DC 500 V									
Insulation strength	1.8k Vac,1 sec									
Weight - without brake(kg)	6.8	7.0	7.5	7.8	13.5	18.5	18.5	6.8	7.0	7.5
Weight - with brake (kg)	8.2	8.4	8.9	9.2	17.5	22.5	22.5	8.2	8.4	8.9
Radial max. loading (N)	490	490	490	490	1176	1470	490	490	490	490
Axial max. loading (N)	98	98	98	98	490	490	98	98	98	98
Max. power per second (kW/s) (with brake)	6.4	24.9	43.1	59.7	24.1	35.9	48.9	9.2	35.9	62.1
Rotor inertia ($\times 10^{-4}$kg.m^2) (with brake)	8.94	9.14	11.90	15.88	37.86	57.06	57.06	8.94	9.14	11.9
Mechanical constant (ms) (with brake)	2.07	1.64	1.19	1.05	1.77	1.10	1.12	2.0	1.51	1.13
Brake holding torque [Nt-m (min)] *2	10.0	10.0	10.0	10.0	25.0	25.0	10.0	10.0	10.0	10.0
Brake power consumption (at 20°C) [W]	19.0	19.0	19.0	19.0	20.4	20.4	19.0	19.0	19.0	19.0

ECMA	E△13				E△18			G△13		
	05	10	15	20	20	30	35	03	06	09
Brake release time [ms (Max)]	10	10	10	10	10	10	10	10	10	10
Brake pull-in time [ms (Max)]	70	70	70	70	70	70	70	70	70	70
Vibration grade (um)	15									
Operating temperature	0 ~ 40 °C									
Storage temperature	-10 ~ 80 °C									
Operating humidity	20% to 90% RH (non-condensing)									
Storage humidity	20% to 90% RH (non-condensing)									
Vibration capacity	2.5 G									
IP rating	IP65 (when waterproof connectors are used, or when an oil seal is used to be fitted to the rotating shaft (an oil seal model is used))									
Approvals	CE c UL us									

Note:

*1 The rated torque is the continuous permissible torque between 0~40˚C operating temperature which is suitable for the following heat sink dimension.
ECMA-__04 / 06 / 08 : 250mm x 250mm x 6mm
ECMA-__10 : 300mm x 300mm x 12mm
ECMA-__13 : 400mm x 400mm x 20mm
ECMA-__18 : 550mm x 550mm x 30mm
Material: Aluminum – F40, F60, F80, F100, F130, F180

*2 The built-in brake of the servo motor is for remaining the item in stop status. Do not use it to decelerate or as the dynamic brake.

Medium-high / High Inertia Servo Motors

ECMA Series	F△13			F△18
	08	30	18	30
Rated power (kW)	0.85	1.3	1.8	3.0
Rated torque (N-m) *1	5.41	8.34	11.48	19.10
Max. torque (N-m)	13.8	23.3	28.7	57.29
Rated speed (r/min)	1500			
Max. speed (r/min)	3000			
Rated current (A)	7.1	12.6	13	19.4
Max. instantaneous current (A)	19.4	38.6	36	58.2
Max. power per second (kW/s)	21.52	34.78	52.93	66.4
Rotor inertia ($\times 10^{-4}$kg.m^2)	13.6	20	24.9	54.95
Mechanical constant (ms)	2.43	1.62	1.7	1.28
Torque constant-KT (N-m/A)	0.76	0.66	0.88	0.98
Voltage constant-KE (mV/(r/min))	29.2	24.2	32.2	35.0
Armature resistance (Ohm)	0.38	0.124	0.185	0.077
Armature inductance (mH)	4.77	1.7	2.6	1.27
Electric constant (ms)	12.55	13.71	14.05	16.5
Insulation class	Class A (UL), Class B (CE)			
Insulation resistance	>100 MΩ, DC 500 V			
Insulation strength	1.8k Vac,1 sec			
Weight - without brake (kg)	8.6	9.4	10.5	18.5
Weight - with brake (kg)	10.0	--	--	22.5
Radial max. loading (N)	490	490	490	1470
Axial max. loading (N)	98	98	98	490
Max. power per second (kW/s) (with brake)	19.78	32.66	50.3	63.9
Rotor inertia ($\times 10^{-4}$kg.m^2) (with brake)	14.8	21.3	26.2	57.06
Mechanical constant (ms) (with brake)	2.65	1.73	1.79	1.33
Brake holding torque [Nt-m (min)] *2	10.0	10.0	10.0	25.0
Brake power consumption (at 20°C) [W]	19.0	19.0	19.0	20.4

ECMA	F△13			F△18
	08	13	18	08
Brake release time [ms (Max)]	10	10	10	10
Brake pull-in time [ms (Max)]	70	70	70	70
Vibration grade (um)	15			
Operating temperature	0 ~ 40 °C			
Storage temperature	-10 ~ 80 °C			
Operating humidity	20% to 90% RH (non-condensing)			
Storage humidity	20% to 90% RH (non-condensing)			
Vibration capacity	2.5 G			
IP rating	IP65 (when waterproof connectors are used, or when an oil seal is used to be fitted to the rotating shaft (an oil seal model is used))			
Approvals*3	CE c UL us			

Note:

*1 The rated torque is the continuous permissible torque between 0~40˚C operating temperature which is suitable for the following heat sink dimension.
ECMA-__04 / 06 / 08 : 250mm x 250mm x 6mm
ECMA-__10 : 300mm x 300mm x 12mm
ECMA-__13 : 400mm x 400mm x 20mm
ECMA-__18 : 550mm x 550mm x 30mm
Material: Aluminum – F40, F60, F80, F100, F130, F180

*2 The built-in brake of the servo motor is for remaining the item in stop status. Do not use it to decelerate or as the dynamic brake.

*3 The application of UL safety compliance for ECMA-F11308, ECMA-F11313, ECMA-F11318 is under processing.

4 If desire to reach the max. torque limit of motor 250%, it is suggested to use the servo drive with higher watt.

High Inertia Series

ECMA	C△06	C△08
	04□H	07□H
Rated power (kW)	0.4	0.75
Rated torque (N-m)*1	1.27	2.39
Max. torque (N-m)	3.82	7.16
Rated speed (r/min)	3000	3000
Max. speed (r/min)	5000	5000
Rated current (A)	2.6	5.1
Max. instantaneous current (A)	7.8	15.3
Max. power per second (kW/s)	21.7	19.63
Rotor inertia ($\times 10^{-4}$kg.m^2)	0.743	2.91
Mechanical constant (ms)	1.42	1.6
Torque constant – KT(N-m/A)	0.49	0.47
Voltage constant – KE (mV/(r/min))	17.4	17.2
Armature resistance (Ohm)	1.55	0.42
Armature inductance (mH)	6.71	3.53
Electric constant (ms)	4.3	8.36
Insulation class	Class A (UL), Class B (CE)	
Insulation resistance	> 100MΩ, DC 500V	
Insulation strength	1.8k Vac,1 sec	
Weight – without brake (kg)	1.8	3.4
Weight – with brake (kg)	2.2	3.9
Radial max. loading (N)	196	245
Axial max. loading (N)	68	98
Max. power per second (kW/s) (with brake)	21.48	19.3
Rotor inertia ($\times 10^{-4}$kg.m^2) (with brake)	0.751	2.96
Mechanical constant (ms) (with brake)	1.43	1.62
Brake holding torque [Nt-m (min)] *2	1.3	1.3
Brake power consumption (at 20˚C) [W]	6.5	6.5
Brake release time [ms (Max)]	10	10
Brake pull-in time [ms (Max)]	70	70
Vibration grade (μm)	15	

ECMA	C△06	C△08
	04□H	07□H
Operating temperature (˚C)	0℃ ~ 40℃	
Storage temperature (˚C)	-10℃ ~ 80℃	
Operating humidity	20 ~ 90%RH (non-condensing)	
Storage humidity	20 ~ 90%RH (non-condensing)	
Vibration capacity	2.5G	
IP Rating	IP65 (use the waterproof connector and shaft seal installation (or oil seal)	
Approvals	CE c UL US	

Note:

*1 The rated torque is the continuous permissible torque between 0~40˚C operating temperature which is suitable for the following heat sink dimension.
ECMA-__04 / 06 / 08 : 250mm x 250mm x 6mm
ECMA-__10 : 300mm x 300mm x 12mm
ECMA-__13 : 400mm x 400mm x 20mm
ECMA-__18 : 550mm x 550mm x 30mm
Material: Aluminum – F40, F60, F80, F100, F130, F180

*2 The built-in brake of the servo motor is for remaining the item in stop status. Do not use it to decelerate or as the dynamic brake.

3 If desire to reach the max. torque limit of motor 250%, it is suggested to use the servo drive with higher watt.

10.3 Torque Features (T-N Curves)

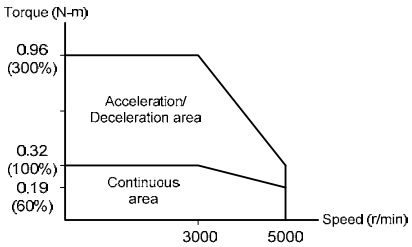

ECMA-C10401□S

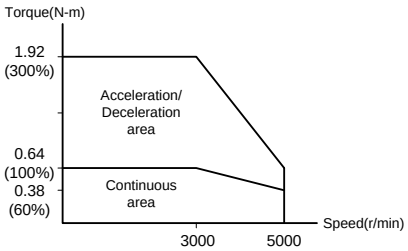

ECMA-C10602□S

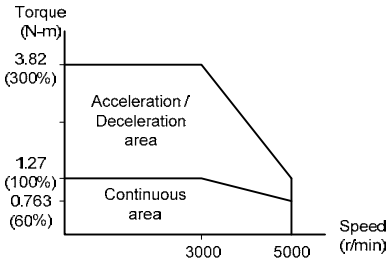

ECMA-C10604□S, ECMA-C10604□H
ECMA-C10804□7

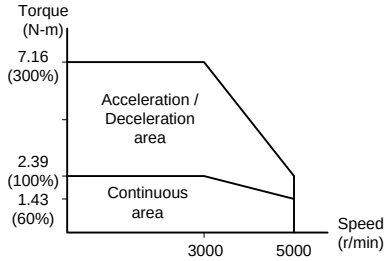

ECMA-C10807□S, ECMA-C10807□H

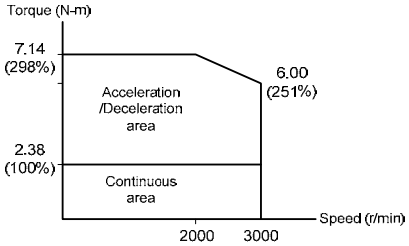

ECMA-C10907□S

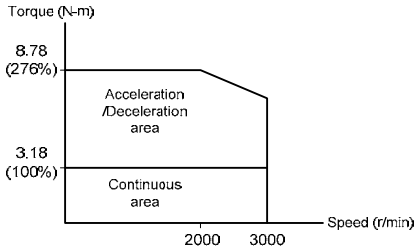

ECMA-C10910□S

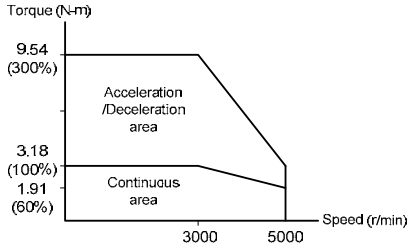

ECMA-C11010□S

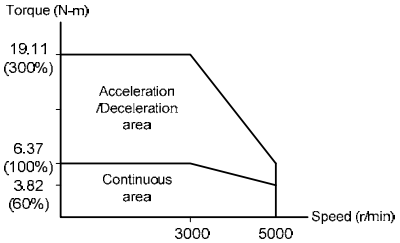

ECMA-C11020□S

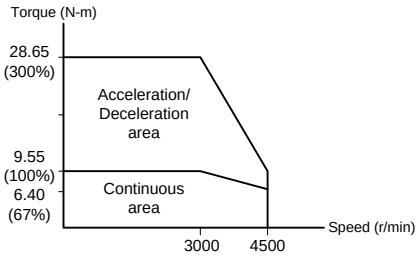

ECMA-C11330□4

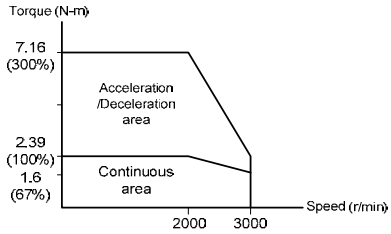

ECMA-E11305□S

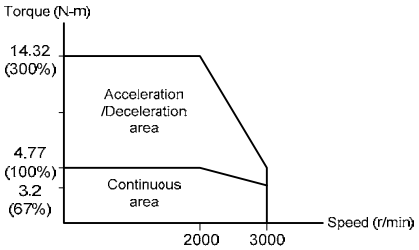

ECMA-E11310□S

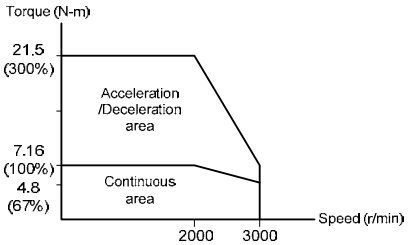

ECMA-E11315□S

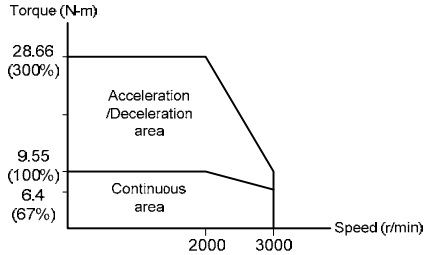

ECMA-E11320□S

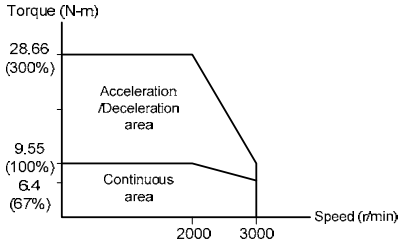

ECMA-E11820□S

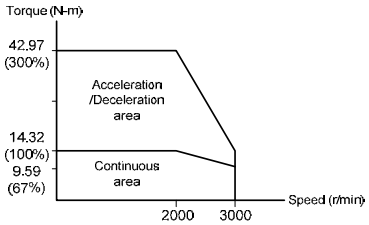

ECMA-E11830□S

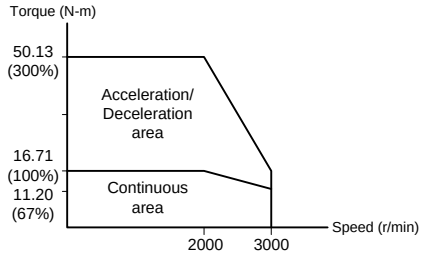

ECMA-E11835□S

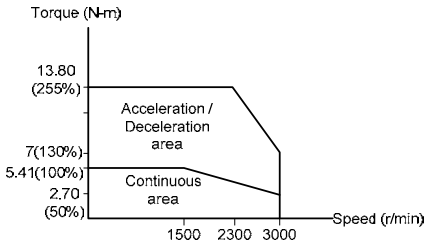

ECMA-F11308□S

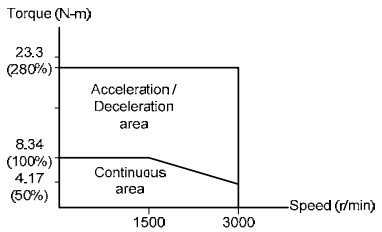

ECMA-F11313□S

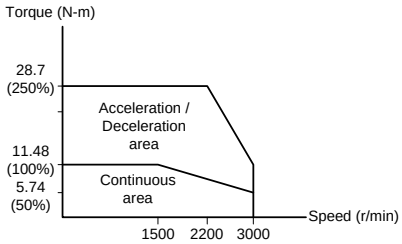

ECMA-F11318□S

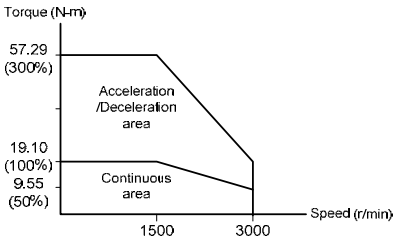

ECMA-F11830□S

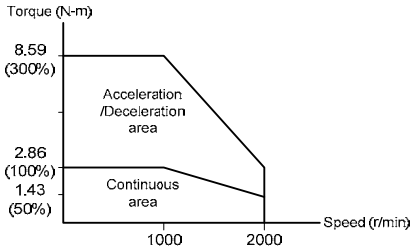

ECMA-G11303□S

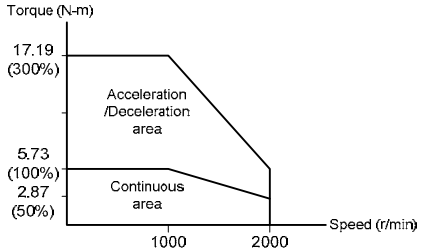

ECMA-G11306□S

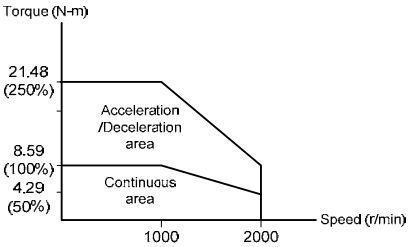

ECMA-G11309□S

10.4 Overload Features

Definition of overload protection

The overload protection is to prevent the motor in overheat status.

Cause of overload

1) When the motor operates over the rated torque, the operation time is too long
2) The inertia ratio is set too big and frequently accelerate / decelerate
3) Connection error between the power cable and encoder wiring
4) Servo gain setting error and cause resonance of the motor
5) The motor with brake operates without releasing the brake

The graph of load and operating time

Low Inertia Series (ECMA C, CM Series)

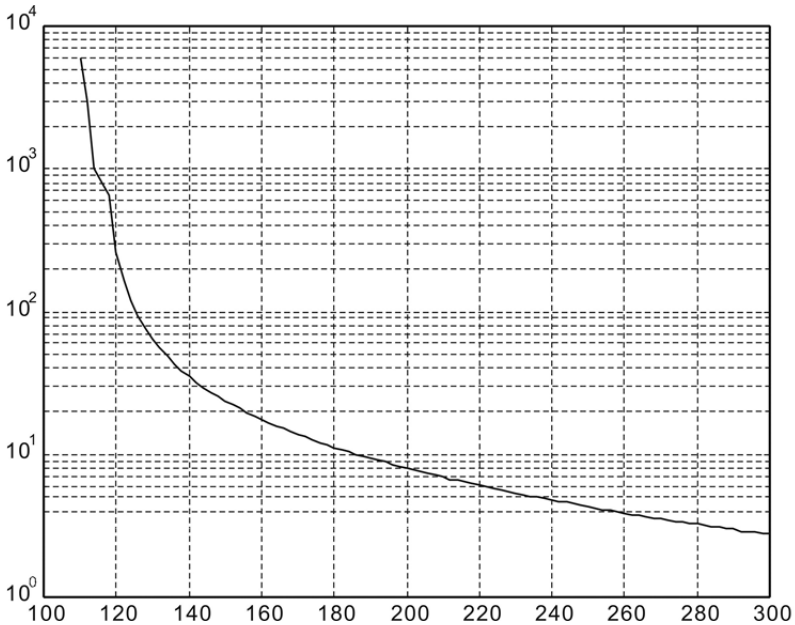

Load	Operating Time
120%	263.8s
140%	35.2s
160%	17.6s
180%	11.2s
200%	8s
220%	6.1s
240%	4.8s
260%	3.9s
280%	3.3s
300%	2.8s

Medium and Medium-High Inertia Series (ECMA E, F Series)

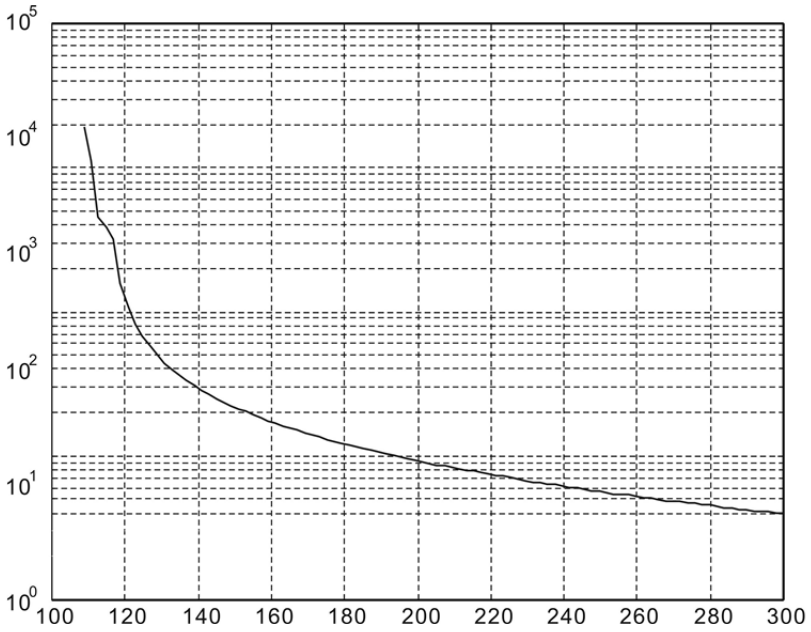

Load	Operating Time
120%	527.6s
140%	70.4s
160%	35.2s
180%	22.4s
200%	16s
220%	12.2s
240%	9.6s
260%	7.8s
280%	6.6s
300%	5.6s

High Inertia Series (ECMA G, GM Series)

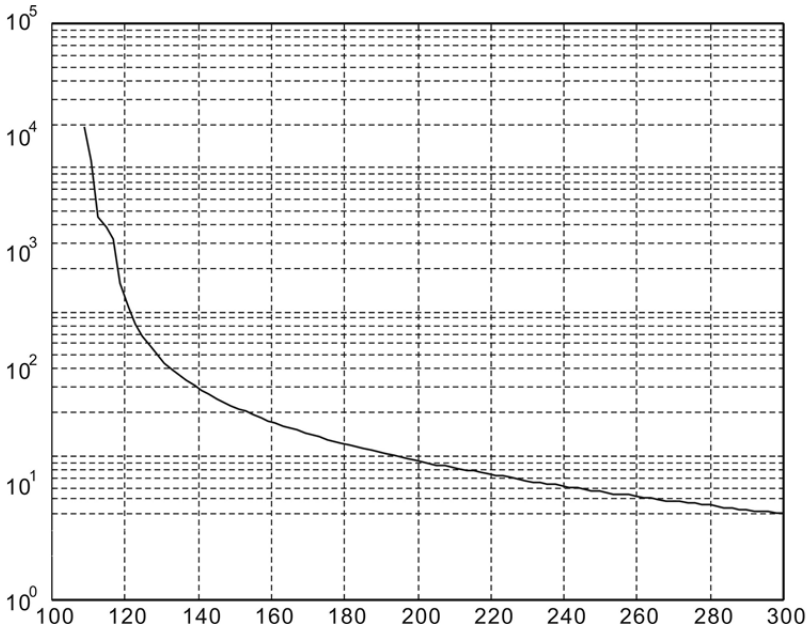

Load	Operating Time
120%	527.6s
140%	70.4s
160%	35.2s
180%	22.4s
200%	16s
220%	12.2s
240%	9.6s
260%	7.8s
280%	6.6s
300%	5.6s

10.5 Dimensions of Servo Drives

ASD-B2-0121; ASD-B2-0221; ASD-B2-0421; ASD-B2L-0421 (100 W ~ 400 W)

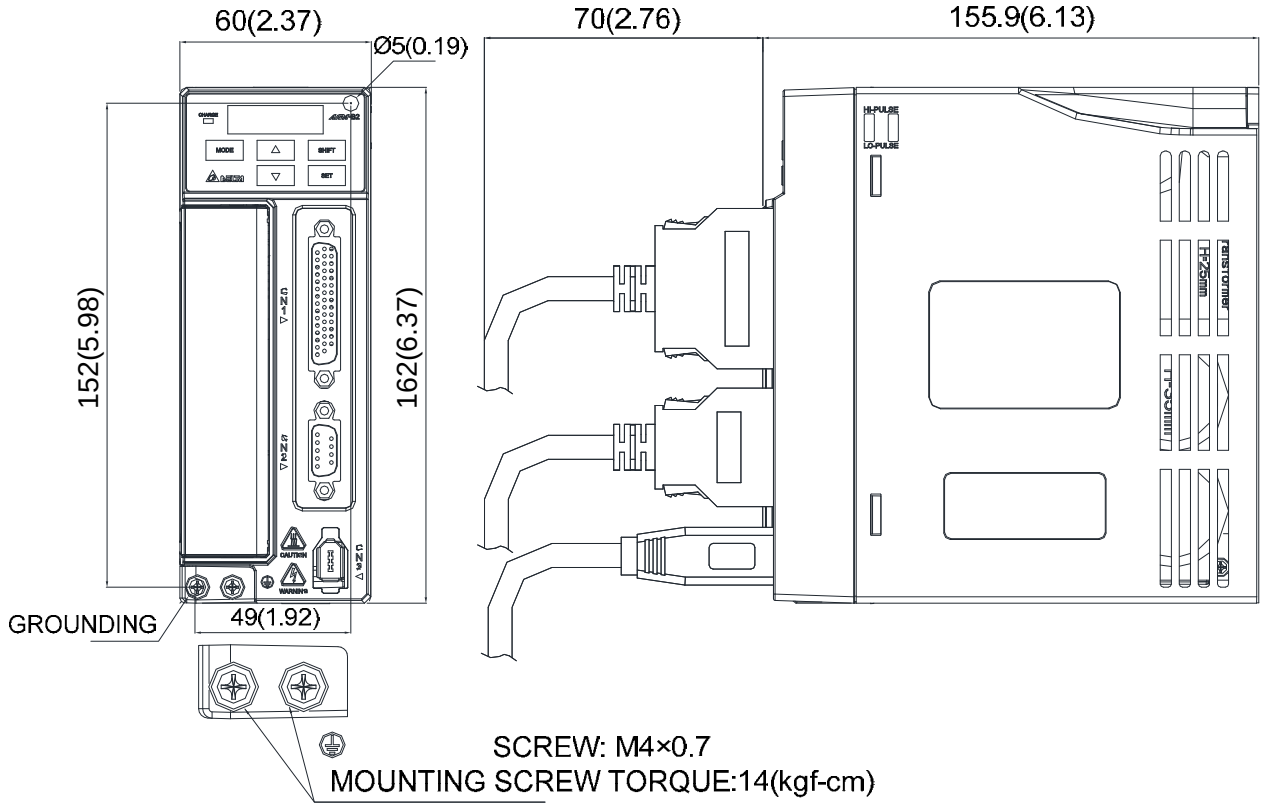

WEIGHT
1.07 (2.36)

NOTE

1) Dimensions are in millimeters (inches); Weights are in kilograms (kg) and (pounds (lbs)).
2) Dimensions and weights of the servo drive may be revised without prior notice.

ASD-B2-0721; ASD-B2L-0721 (750 W)

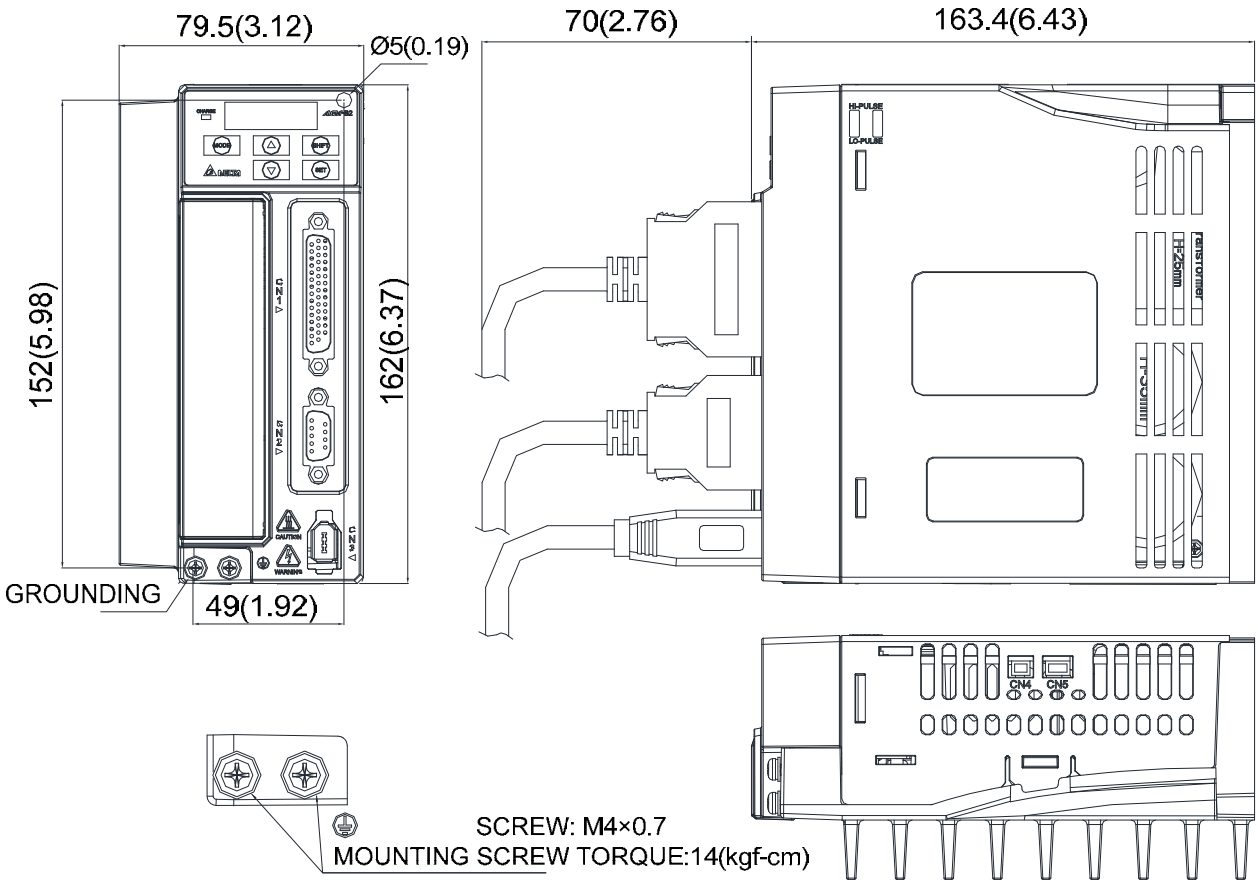

WEIGHT
1.54 (3.40)

NOTE

1) Dimensions are in millimeters (inches); Weights are in kilograms (kg) and (pounds (lbs)).
2) Dimensions and weights of the servo drive may be revised without prior notice.

ASD-B2-1021; ASD-B2L-1021; ASD-B2-1521 (1 kW ~ 1.5 kW)

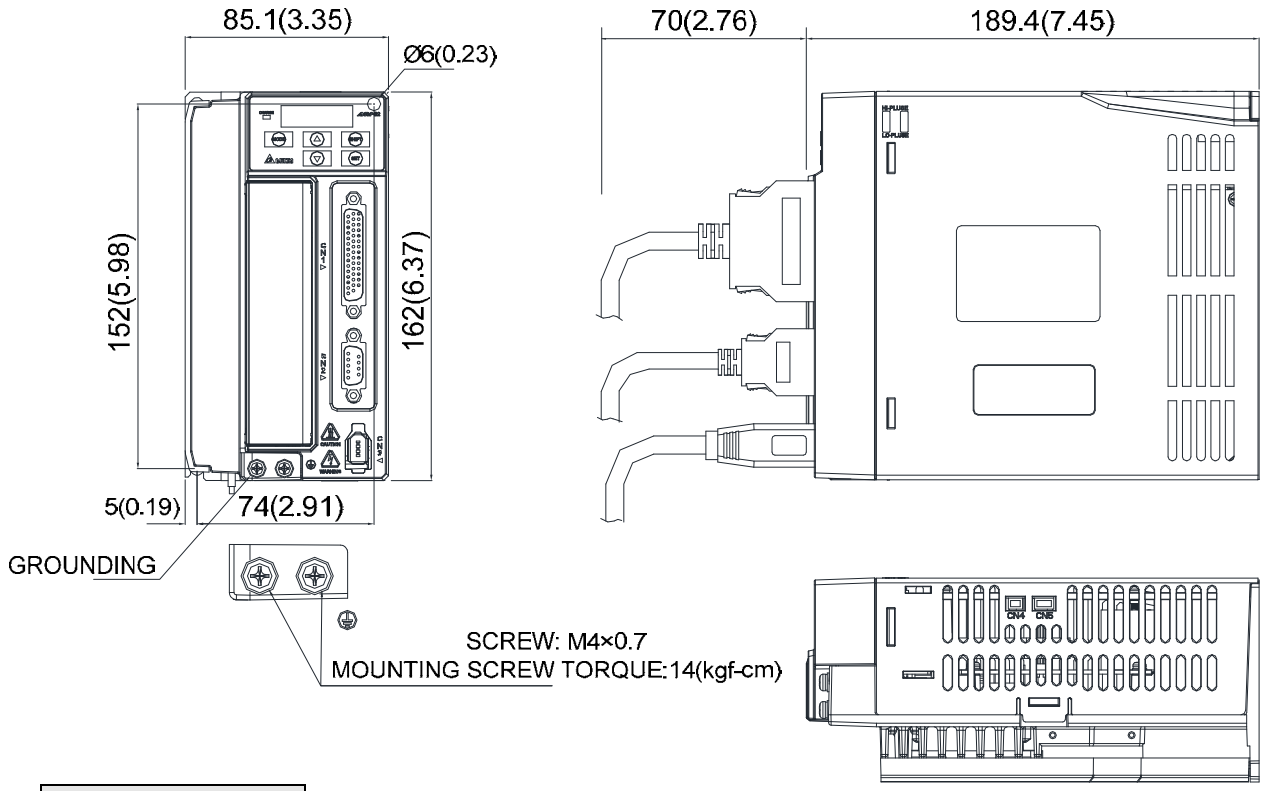

WEIGHT
1.72 (3.79)

NOTE

1) Dimensions are in millimeters (inches); Weights are in kilograms (kg) and (pounds (lbs)).

2) Dimensions and weights of the servo drive may be revised without prior notice.

ASD-B2-2023; ASD-B2-3023 (2 kW ~ 3 kW)

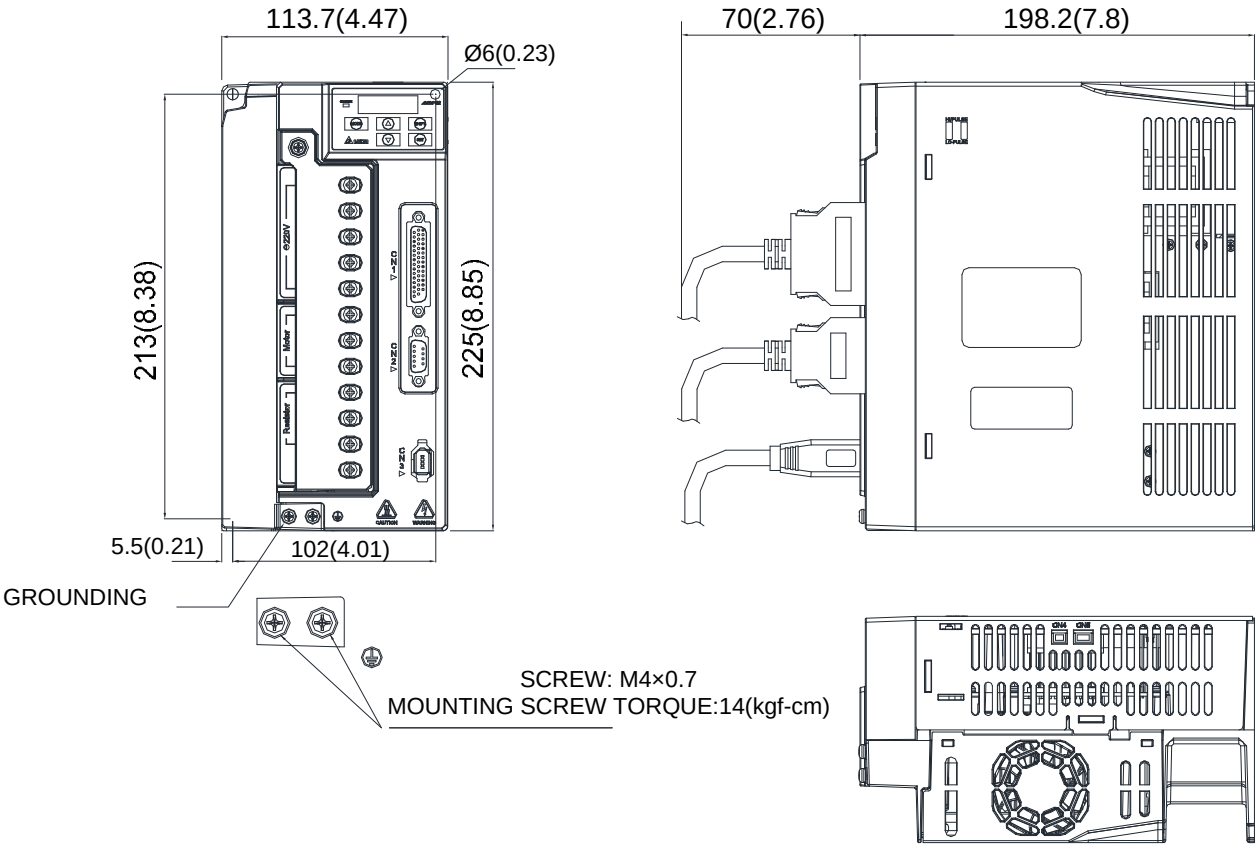

WEIGHT
2.67 (5.88)

NOTE

1) Dimensions are in millimeters (inches); Weights are in kilograms (kg) and (pounds (lbs)).
2) Dimensions and weights of the servo drive may be revised without prior notice.

10.6 Dimensions of Servo Motors

Motor Frame Size: 86 mm and below Models (Units: mm)

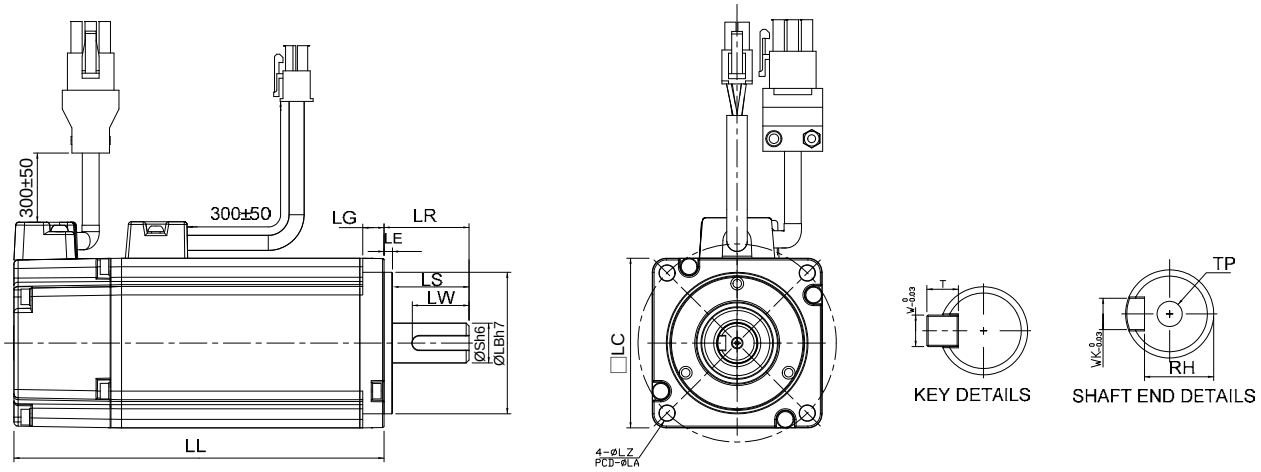

Model	C△0401□S	C△0602□S	C△0604□S	C△0604□H
LC	40	60	60	60
LZ	4.5	5.5	5.5	5.5
LA	46	70	70	70
S	$8(^{+0}_{-0.009})$	$14(^{+0}_{-0.011})$	$14(^{+0}_{-0.011})$	$14(^{+0}_{-0.011})$
LB	$30(^{+0}_{-0.021})$	$50(^{+0}_{-0.025})$	$50(^{+0}_{-0.025})$	$50(^{+0}_{-0.025})$
LL (without brake)	100.6	105.5	130.7	145.8
LL (with brake)	136.6	141.6	166.8	176.37
LS	20	27	27	27
LR	25	30	30	30
LE	2.5	3	3	3
LG	5	7.5	7.5	7.5
LW	16	20	20	20
RH	6.2	11	11	11
WK	3	5	5	5
W	3	5	5	5
T	3	5	5	5
TP	M3 Depth 8	M4 Depth 15	M4 Depth 15	M4 Depth 15

NOTE

1) Dimensions are in millimeters.
2) Dimensions and weights of the servo motor may be revised without prior notice.
3) The boxes (□) in the model names represent shaft end/brake or the number of oil seal.
4) Please refer to Chapter 1 for the boxes (△) in the model names (which represents encoder type).

Motor Frame Size: 86 mm and below Models (Units: mm)

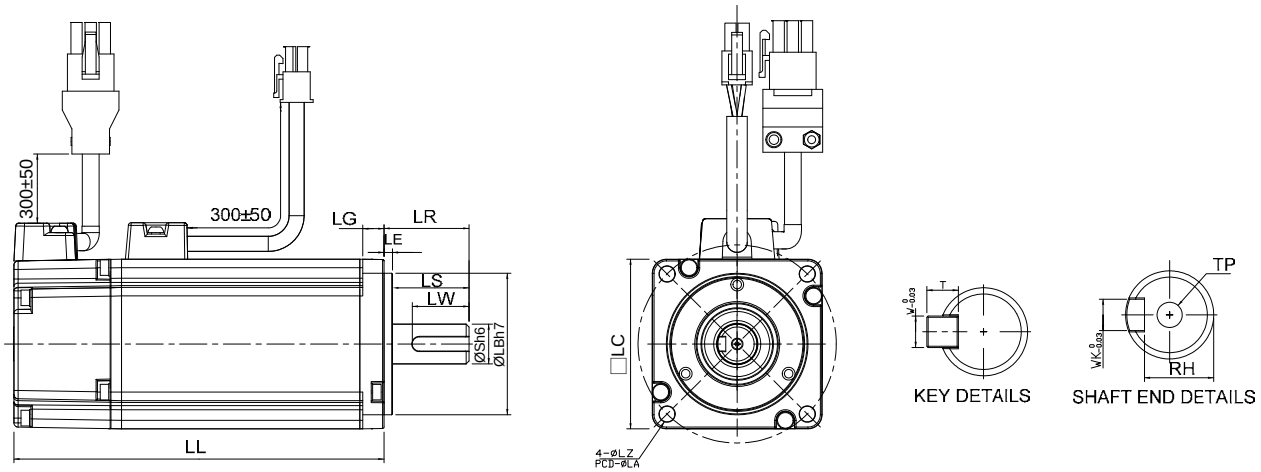

Model	C△0804□7	C△0804□S	C△0807□H	C△0907□S	C△0910□S
LC	80	80	80	86	86
LZ	6.6	6.6	6.6	6.6	6.6
LA	90	90	90	100	100
S	$14(^{+0}_{-0.011})$	$19(^{+0}_{-0.013})$	$19(^{+0}_{-0.013})$	$16(^{+0}_{-0.011})$	$16(^{+0}_{-0.011})$
LB	$70(^{+0}_{-0.030})$	$70(^{+0}_{-0.030})$	$70(^{+0}_{-0.030})$	$80(^{+0}_{-0.030})$	$80(^{+0}_{-0.030})$
LL (without brake)	112.3	138.3	151.1	130.2	153.2
LL (with brake)	152.8	178	189	161.3	184.3
LS	27	32	32	30	30
LR	30	35	35	35	35
LE	3	3	3	3	3
LG	8	8	8	8	8
LW	20	25	25	20	20
RH	11	15.5	15.5	13	13
WK	5	6	6	5	5
W	5	6	6	5	5
T	5	6	6	5	5
TP	M4 Depth 15	M6 Depth 20	M6 Depth 20	M5 Depth 15	M5 Depth 15

NOTE

1) Dimensions are in millimeters.
2) Dimensions and weights of the servo motor may be revised without prior notice.
3) The boxes (□) in the model names represent shaft end/brake or the number of oil seal.
4) Please refer to Chapter 1 for the boxes (△) in the model names (which represents encoder type).

Motor Frame Size: 100 mm ~ 130 mm Models (Units: mm)

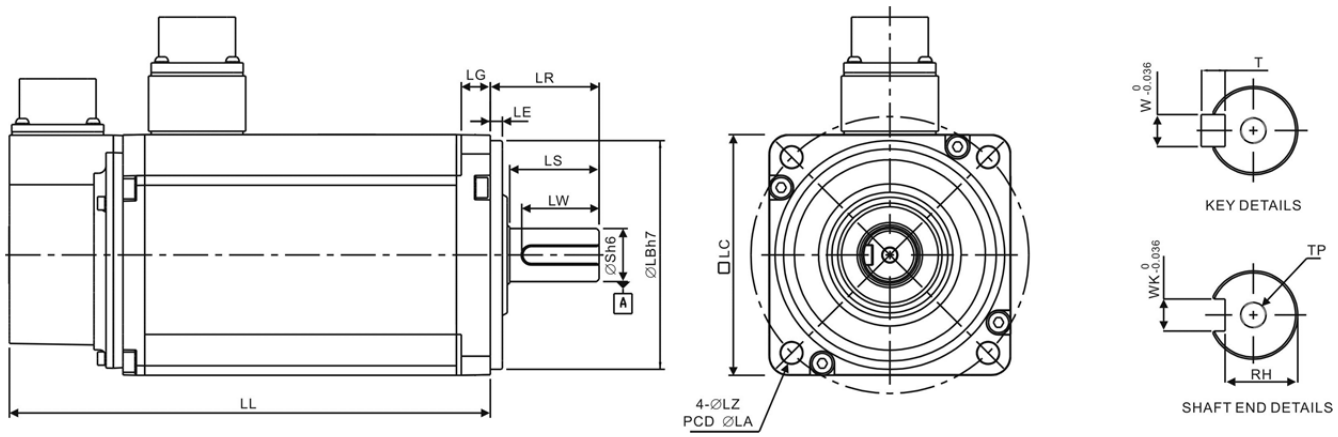

Model	C△1010□ S	C△1020□ S	C△1330□ 4	E△1305□ S	E△1310□ S	E△1315□ S	E△1320□ S
LC	100	100	130	130	130	130	130
LZ	9	9	9	9	9	9	9
LA	115	115	145	145	145	145	145
S	$22(^{+0}_{-0.013})$	$22(^{+0}_{-0.013})$	$24(^{+0}_{-0.013})$	$22(^{+0}_{-0.013})$	$22(^{+0}_{-0.013})$	$22(^{+0}_{-0.013})$	$22(^{+0}_{-0.013})$
LB	$95(^{+0}_{-0.035})$	$95(^{+0}_{-0.035})$	$110(^{+0}_{-0.035})$	$110(^{+0}_{-0.035})$	$110(^{+0}_{-0.035})$	$110(^{+0}_{-0.035})$	$110(^{+0}_{-0.035})$
LL (without brake)	153.3	199	187.5	147.5	147.5	167.5	187.5
LL (with brake)	192.5	226	216.0	183.5	183.5	202	216
LS	37	37	47	47	47	47	47
LR	45	45	55	55	55	55	55
LE	5	5	6	6	6	6	6
LG	12	12	11.5	11.5	11.5	11.5	11.5
LW	32	32	36	36	36	36	36
RH	18	18	20	18	18	18	18
WK	8	8	8	8	8	8	8
W	8	8	8	8	8	8	8
T	7	7	7	7	7	7	7
TP	M6 Depth 20	M6 Depth 20	M6 Depth 20	M6 Depth 20	M6 Depth 20	M6 Depth 20	M6 Depth 20

NOTE

1) Dimensions are in millimeters.
2) Dimensions and weights of the servo motor may be revised without prior notice.
3) The boxes (□) in the model names represent shaft end/brake or the number of oil seal.
4) Please refer to Chapter 1 for the boxes (△) in the model names (which represents encoder type).

Motor Frame Size: 100 mm ~ 130 mm Models (Units: mm)

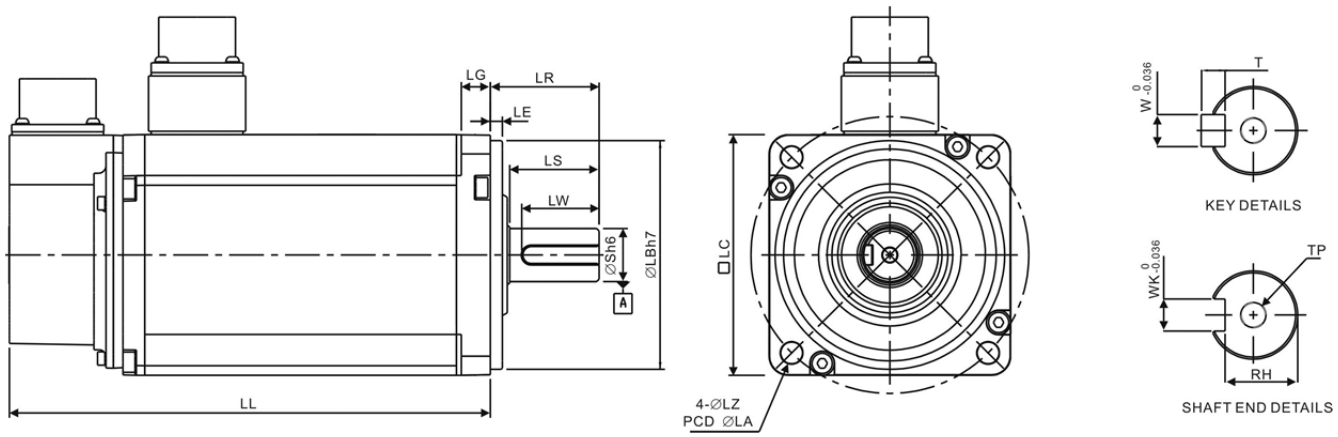

Model	F△1308□ S	F△1313□ S	F△1318□ S	G△1303□ S	G△1306□ S	G△1309□ S
LC	130	130	130	130	130	130
LZ	9	9	9	9	9	9
LA	145	145	145	145	145	145
S	$22(^{+0}_{-0.013})$	$22(^{+0}_{-0.013})$	$22(^{+0}_{-0.013})$	$22(^{+0}_{-0.013})$	$22(^{+0}_{-0.013})$	$22(^{+0}_{-0.013})$
LB	$110(^{+0}_{-0.035})$	$110(^{+0}_{-0.035})$	$110(^{+0}_{-0.035})$	$110(^{+0}_{-0.035})$	$110(^{+0}_{-0.035})$	$110(^{+0}_{-0.035})$
LL (without brake)	152.5	187.5	202	147.5	147.5	163.5
LL (with brake)	181	--	--	183.5	183.5	198
LS	47	47	47	47	47	47
LR	55	55	55	55	55	55
LE	6	6	6	6	6	6
LG	11.5	11.5	11.5	11.5	11.5	11.5
LW	36	36	36	36	36	36
RH	18	18	18	18	18	18
WK	8	8	8	8	8	8
W	8	8	8	8	8	8
T	7	7	7	7	7	7
TP	M6 Depth 20	M6 Depth 20	M6 Depth 20	M6 Depth 20	M6 Depth 20	M6 Depth 20

NOTE

1) Dimensions are in millimeters.
2) Dimensions and weights of the servo motor may be revised without prior notice.
3) The boxes (□) in the model names represent shaft end/brake or the number of oil seal.
4) Please refer to Chapter 1 for the boxes (△) in the model names (which represents encoder type).

Motor Frame Size: 180 mm Models (Units: mm)

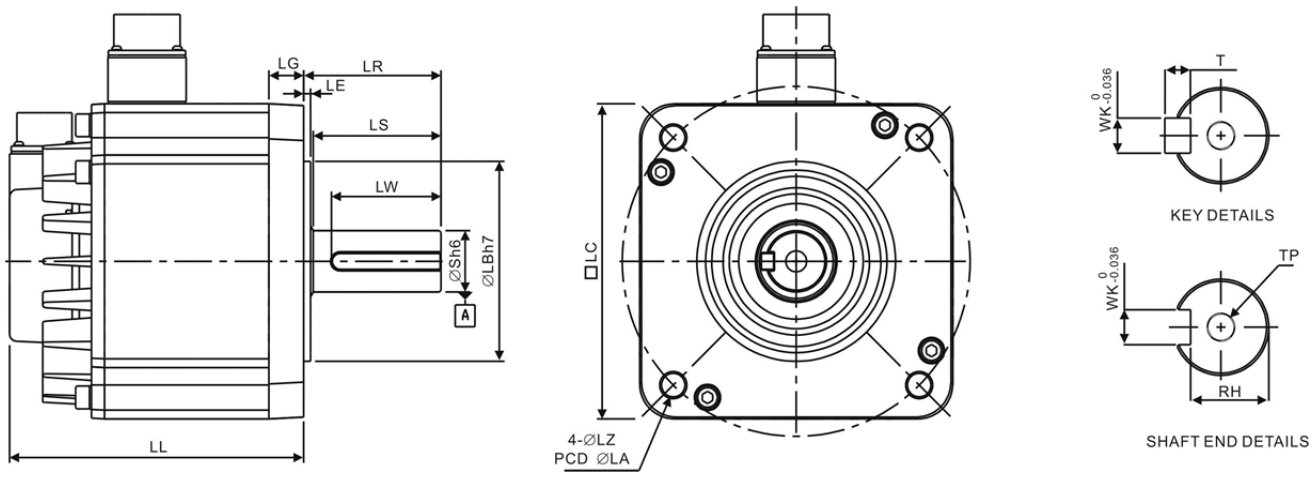

Model	E△1820□S	E△1830□S	E△1835□ S	F△1830□S
LC	180	180	180	180
LZ	13.5	13.5	13.5	13.5
LA	200	200	200	200
S	**35($^{+0}_{-0.016}$)**	**35($^{+0}_{-0.016}$)**	35($^{+0}_{-0.016}$)	**35($^{+0}_{-0.016}$)**
LB	**114.3($^{+0}_{-0.035}$)**	**114.3($^{+0}_{-0.035}$)**	114.3($^{+0}_{-0.035}$)	**114.3($^{+0}_{-0.035}$)**
LL (without brake)	169	202.1	202.1	202.1
LL (with brake)	203.1	235.3	235.3	235.3
LS	73	73	73	73
LR	79	79	79	79
LE	4	4	4	4
LG	20	20	20	20
LW	63	63	63	63
RH	30	30	30	30
WK	10	10	10	10
W	10	10	10	10
T	8	8	8	8
TP	M12 Depth 25	M12 Depth 25	M12 Depth 25	M12 Depth 25

NOTE

1) Dimensions are in millimeters.
2) Dimensions and weights of the servo motor may be revised without prior notice.
3) The boxes (□) in the model names are for optional configurations. (Please refer to section 1.2 for model explanation.)
4) Please refer to Chapter 1 for the boxes (△) in the model names (which represents encoder type).

Appendix A Accessories

■ Power Connectors

Delta Part Number: ASDBCAPW0000

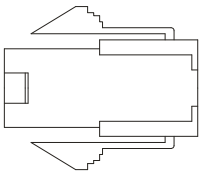

Title	Part No.	Manufacturer
Housing	C4201H00-2*2PA	JOWLE
Terminal	C4201TOP-2	JOWLE

Delta Part Number:ASDBCAPW0100

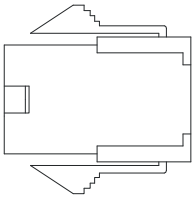

Title	Part No.	Manufacturer
Housing	C4201H00-2*3PA	JOWLE
Terminal	C4201TOP-2	JOWLE

Delta Part Number: ASD-CAPW1000

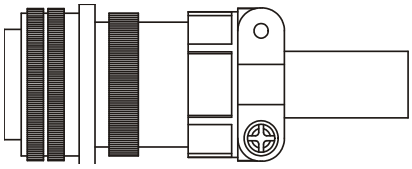

3106A-20-18S

Delta Part Number: ASD-CAPW2000

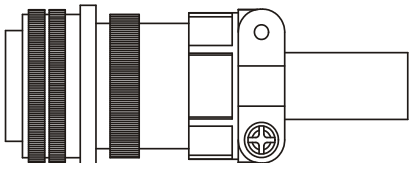

3106A-24-11S

■ Power Cables

Delta Part Number: ASDBCAPW0203 / 0205

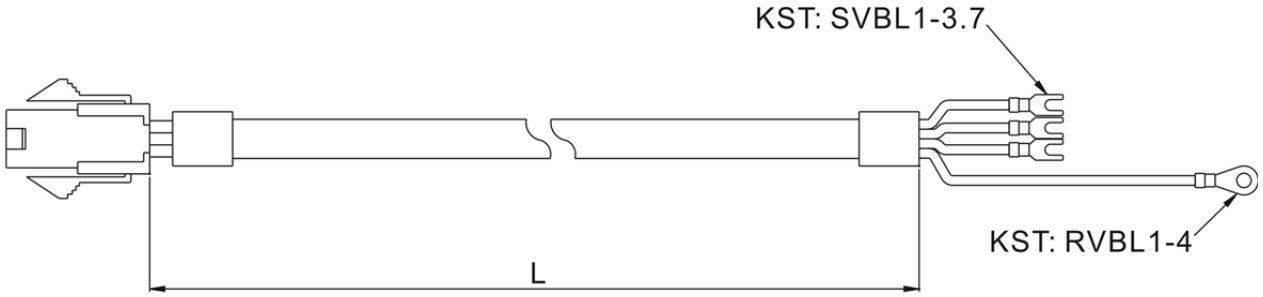

Title	Part No.	Manufacturer
Housing	C4201H00-2*2PA	JOWLE
Terminal	C4201TOP-2	JOWLE

Title	Part No.	L	
		mm	inch
1	ASDBCAPW0203	3000 ± 50	118 ± 2
2	ASDBCAPW0205	5000 ± 50	197 ± 2

Delta Part Number: ASDBCAPW0303 / 0305

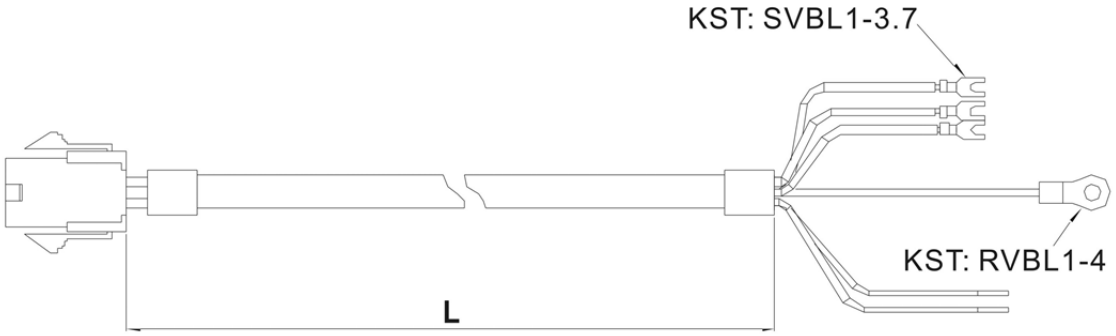

Title	Part No.	Manufacturer
Housing	C4201H00-2*3PA	JOWLE
Terminal	C4201TOP-2	JOWLE

Title	Part No.	L	
		mm	inch
1	ASDBCAPW0303	3000 ± 50	118 ± 2
2	ASDBCAPW0305	5000 ± 50	197 ± 2

Delta Part Number: ASDBCAPW1203 / 1205

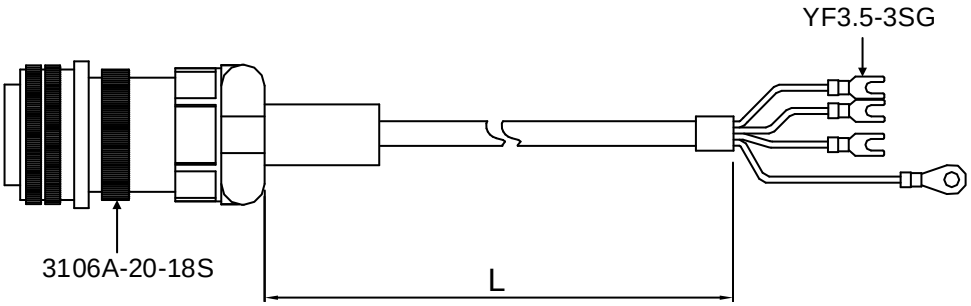

Title	Part No.	Straight	L	
			mm	inch
1	ASDBCAPW1203	3106A-20-18S	3000 ± 50	118 ± 2
2	ASDBCAPW1205	3106A-20-18S	5000 ± 50	197 ± 2

Delta Part Number: ASDBCAPW1303 / 1305

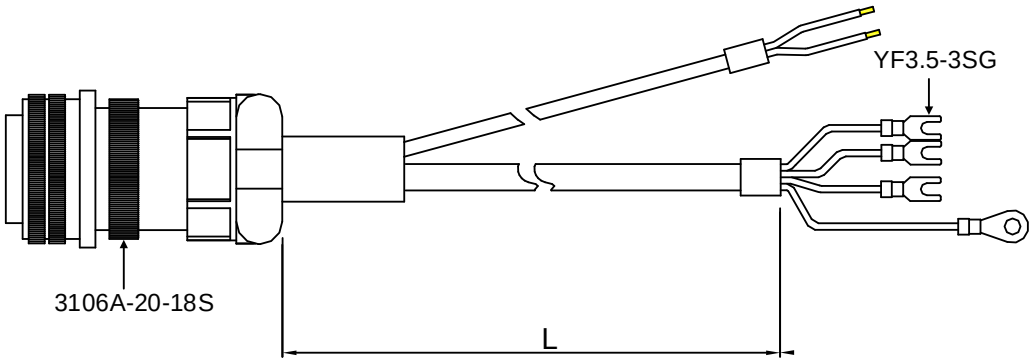

Title	Part No.	Straight	L	
			mm	inch
1	ASDBCAPW1303	3106A-20-18S	3000 ± 50	118 ± 2
2	ASDBCAPW1305	3106A-20-18S	5000 ± 50	197 ± 2

Delta Part Number: ASD-CAPW2203 / 2205

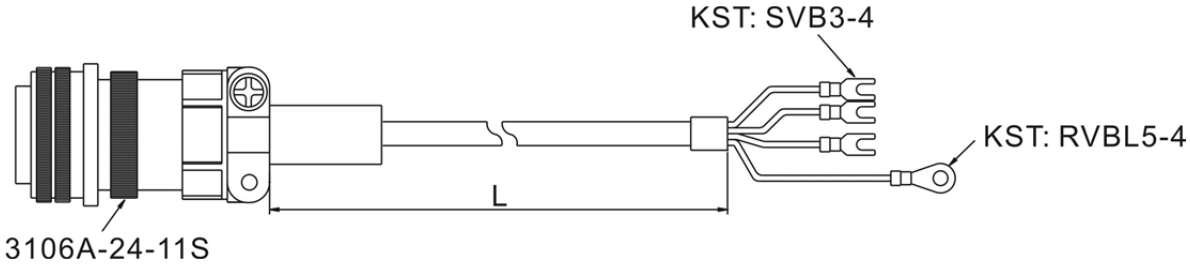

Title	Part No.	Straight	L	
			mm	inch
1	ASD-CAPW2203	3106A-24-11S	3000 ± 50	118 ± 2
2	ASD-CAPW2205	3106A-24-11S	5000 ± 50	197 ± 2

Delta Part Number: ASD-CAPW2303 / 2305

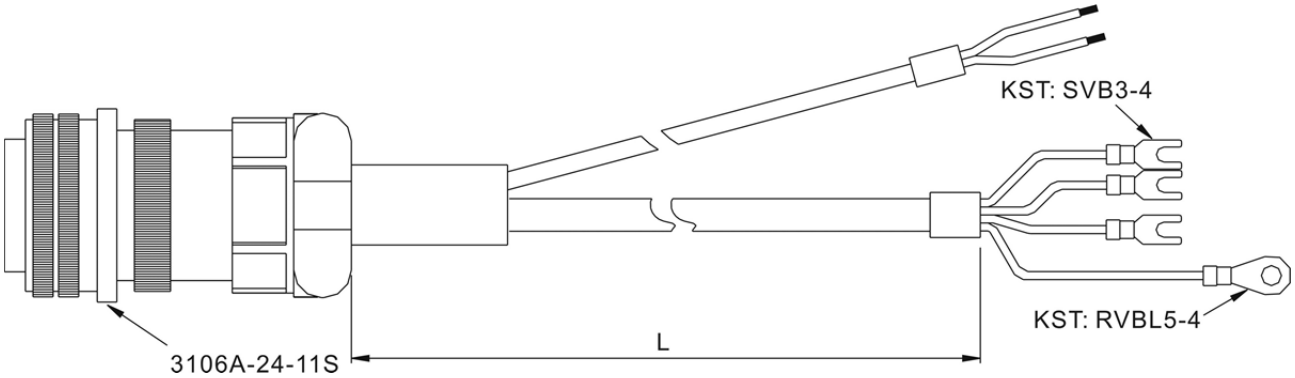

Title	Part No.	Straight	L	
			mm	inch
1	ASD-CAPW2303	3106A-24-11S	3000 ± 50	118 ± 2
2	ASD-CAPW2305	3106A-24-11S	5000 ± 50	197 ± 2

■ Encoder Connectors

Delta Part Number: ASDBCAEN0000

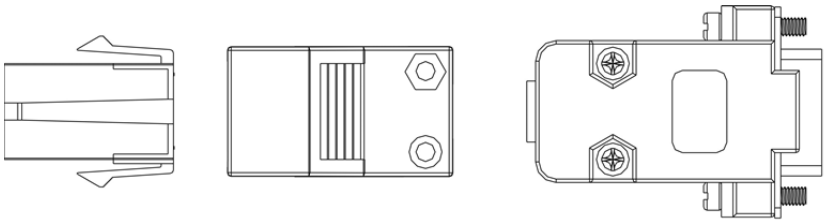

D-SUB Connector 9P

Title	Part No.	Manufacturer
Housing	AMP (1-172161-9)	AMP
Terminal	AMP (170359-3)	AMP
CLAMP	DELTA (34703237XX)	DELTA

Delta Part Number: ASDBCAEN1000

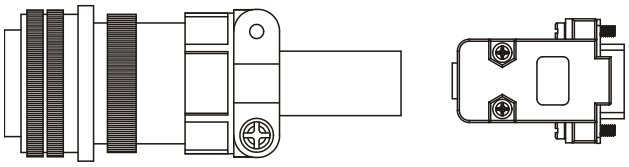

3106A-20-29S D-SUB Connector 9P

■ Encoder Cables

Delta Part Number: ASDBCAEN0003 / 0005

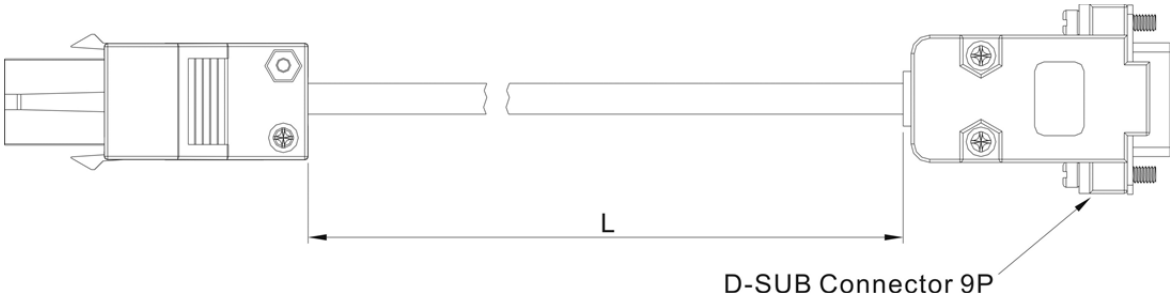

Title	Part No.	Manufacturer
Housing	AMP (1-172161-9)	AMP
Terminal	AMP (170359-3)	AMP
CLAMP	DELTA (34703237XX)	DELTA

Title	Part No.	L	
		mm	inch
1	ASDBCAEN0003	3000 ± 50	118 ±2
2	ASDBCAEN0005	5000 ± 50	197 ± 2

Delta Part Number: ASDBCAEN1003 / 1005

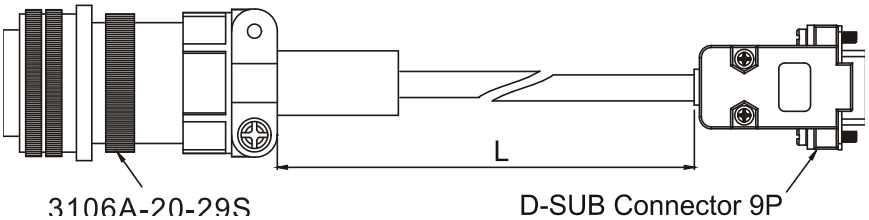

Title	Part No.	Straight	L	
			mm	inch
1	ASDBCAEN1003	3106A-20-29S	3000 ± 50	118 ± 2
2	ASDBCAEN1005	3106A-20-29S	5000 ± 50	197 ± 2

■ I/O Signal Connector (CN1)

Delta Part Number: ASDBCNDS0044

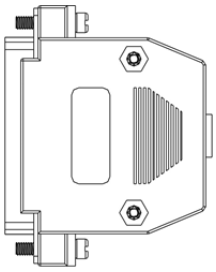

D-SUB 44 PIN PLUG

Delta Part Number: ASD-CNDS0015

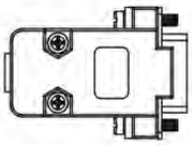

D-SUB Connector 15P

■ Communication Cable between Servo Drive and Computer

Delta Part Number: ASD-CNUS0A08

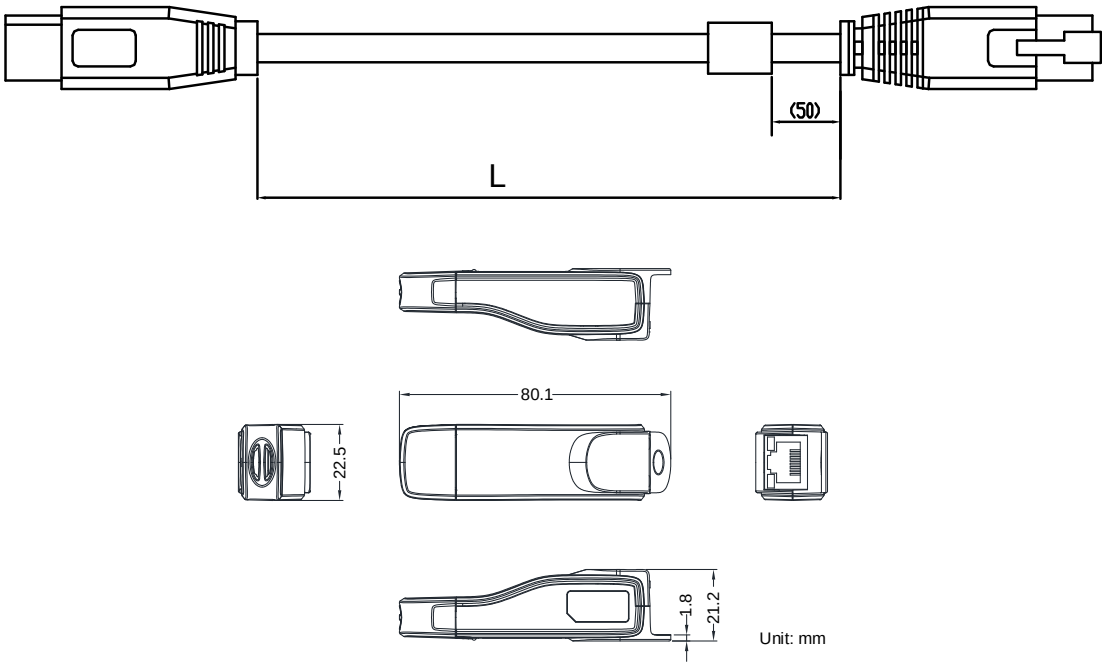

Title	Part No. : ASD-CNUS0A08	
cable	L	3000 ± 100 mm
		118 ±4 inch
connector	RJ connector	RJ-45
	USB connector	A-type (USB V2.0)

■ Voltage Output Cable (Analog Signal)

Delta Part Number: --

Delta Serial Number: 3864471800

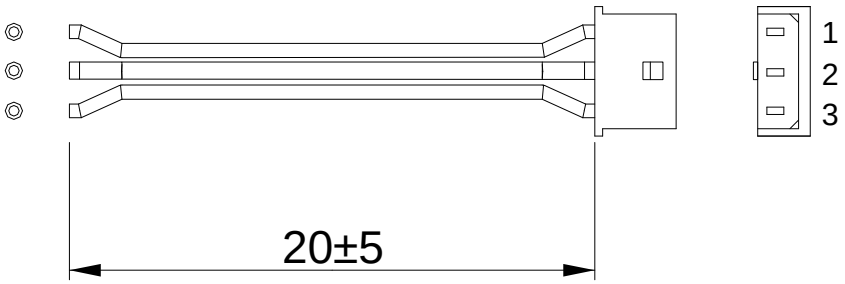

Title	Part No.	Manufacturer
Housing	A2004H00-3P	JWT
Terminal	A2004TOP-2	JWT

■ RS-485 Connector

Delta Part Number: ASD-CNIE0B06

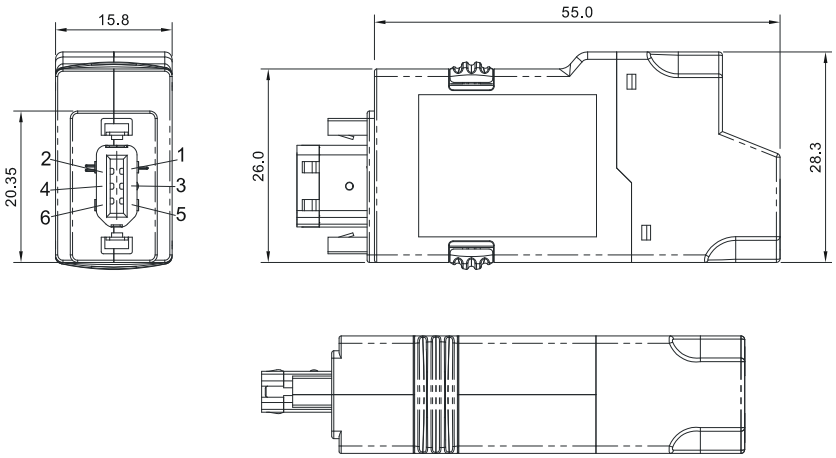

■ Terminal Block Module

Delta Part Number: ASD-MDDS4444

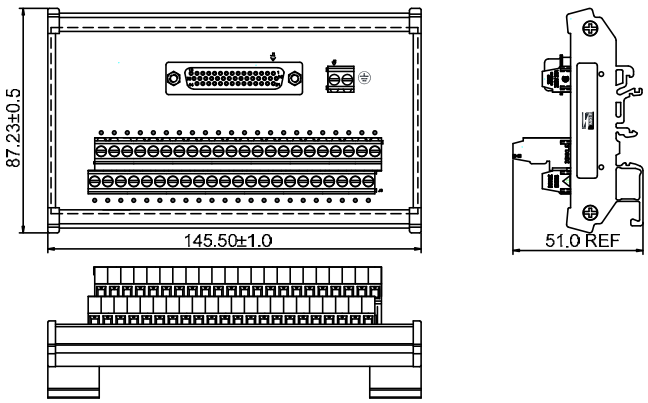

■ Servo Drive, Servo Motor and Accessories Combinations

100W Servo Drive and 100W Low Inertia Servo Motor

Servo Drive	ASD-B2-0121-B
Low inertia Servo Motor	ECMA-C△0401□S
Motor Power Cable (Without Brake)	ASDBCAPW020X
Power Connector (Without Brake)	ASDBCAPW0000
Motor Power Cable (With Brake)	ASDBCAPW030X
Power Connector (With Brake)	ASDBCAPW0100
Encoder Cable	ASDBCAEN000X
Encoder Connector	ASDBCAEN0000

(X=3 indicates that the cable length is 3m; X=5 indicates that the cable length is 5m)

200W Servo Drive and 200W Low Inertia Servo Motor

Servo Drive	ASD-B2-0122-B
Low inertia Servo Motor	ECMA-C△0602□S
Motor Power Cable (Without Brake)	ASDBCAPW020X
Power Connector (Without Brake)	ASDBCAPW0000
Motor Power Cable (With Brake)	ASDBCAPW030X
Power Connector (With Brake)	ASDBCAPW0100
Encoder Cable	ASDBCAEN000X
Encoder Connector	ASDBCAEN0000

(X=3 indicates that the cable length is 3m; X=5 indicates that the cable length is 5m)

400W Servo Drive and 400W Low Inertia Servo Motor

Servo Drive	ASD-B2-0421-B
Low inertia Servo Motor	ECMA-C△0604□S ECMA-C△0804□7 ECMA-CM0604PS
Motor Power Cable (Without Brake)	ASDBCAPW020X
Power Connector (Without Brake)	ASDBCAPW0000
Motor Power Cable (With Brake)	ASDBCAPW030X
Power Connector (With Brake)	ASDBCAPW0100
Encoder Cable	ASDBCAEN000X
Encoder Connector	ASDBCAEN0000

(X=3 indicates that the cable length is 3m; X=5 indicates that the cable length is 5m)

400W Servo Drive and 400W High Inertia Servo Motor

Servo Drive	ASD-B2-0421-B
Low inertia Servo Motor	ECMA-C△0604□H
Motor Power Cable (Without Brake)	ASDBCAPW020X
Power Connector (Without Brake)	ASDBCAPW0000
Power Cable (With Brake)	ASDBCAPW030X
Power Connector (With Brake)	ASDBCAPW0100
Encoder Cable	ASDBCAEN000X
Encoder Connector	ASDBCAEN0000

(X=3 indicates that the cable length is 3m; X=5 indicates that the cable length is 5m)

400W Servo Drive and 500W Medium Inertia Servo Motor

Servo Drive	ASD-B2-0421-B
Medium inertia Servo Motor	ECMA-E△1305□S
Motor Power Cable (Without Brake)	ASDBCAPW120X
Motor Power Cable (With Brake)	ASDBCAPW130X
Power Connector	ASD-CAPW1000
Increment Encoder Cable	ASDBCAEN100X
Encoder Connector	ASDBCAEN1000

(X=3 indicates that the cable length is 3m; X=5 indicates that the cable length is 5m)

400W Servo Drive and 300W High Inertia Servo Motor

Servo Drive	ASD-B2-0421-B
High inertia Servo Motor	ECMA-G△1303□S
Motor Power Cable (Without Brake)	ASDBCAPW120X
Motor Power Cable (With Brake)	ASDBCAPW130X
Power Connector	ASD-CAPW1000
Encoder Cable	ASDBCAEN100X
Encoder Connector	ASDBCAEN1000

(X=3 indicates that the cable length is 3m; X=5 indicates that the cable length is 5m)

750W Servo Drive and 600W High Inertia Servo Motor

Servo Drive	ASD-B2-0721-B
High inertia Servo Motor	ECMA-G△1306□S ECMA-GM1306PS
Motor Power Cable (Without Brake)	ASDBCAPW120X
Motor Power Cable (With Brake)	ASDBCAPW130X
Power Connector	ASD-CAPW1000
Encoder Cable	ASDBCAEN100X
Encoder Connector	ASDBCAEN1000

(X=3 indicates that the cable length is 3m; X=5 indicates that the cable length is 5m)

750W Servo Drive and 750W Low Inertia Servo Motor

Servo Drive	ASD-B2-0721-B
Low inertia Servo Motor	ECMA-C△0807□S ECMA-C△0907□S ECMA-CM0807PS
Motor Power Cable (Without Brake)	ASDBCAPW020X
Power Connector (Without Brake)	ASDBCAPW0000
Motor Power Cable (With Brake)	ASDBCAPW030X
Power Connector (With Brake)	ASDBCAPW0100
Encoder Cable	ASDBCAEN000X
Encoder Connector	ASDBCAEN0000

(X=3 indicates that the cable length is 3m; X=5 indicates that the cable length is 5m)

750W Servo Drive and 750W High Inertia Servo Motor

Servo Drive	ASD-B2-0721-B
Low inertia Servo Motor	ECMA-C△0807□H
Motor Power Cable (Without Brake)	ASDBCAPW020X
Power Connector (Without Brake)	ASDBCAPW0000
Motor Power Cable (With Brake)	ASDBCAPW030X
Power Connector (With Brake)	ASDBCAPW0100
Power Connector	ASDBCAEN000X
Encoder Cable	ASDBCAEN0000
Encoder Connector	ASDBCAPW020X

(X=3 indicates that the cable length is 3m; X=5 indicates that the cable length is 5m)

1kW Servo Drive and 850W Low Inertia Servo Motor

Servo Drive	ASD-B2-1021-B
Low inertia Servo Motor	ECMA-F△1308□S
Motor Power Cable (Without Brake)	ASDBCAPW120X
Motor Power Cable (With Brake)	ASDBCAPW130X
Power Connector	ASD-CAPW1000
Encoder Cable	ASDBCAEN100X
Encoder Connector	ASDBCAEN1000

(X=3 indicates that the cable length is 3m; X=5 indicates that the cable length is 5m)

1kW Servo Drive and 1kW Low Inertia Servo Motor

Servo Drive	ASD-B2-1021-B
Low inertia Servo Motor	ECMA-C△1010□S
Motor Power Cable (Without Brake)	ASDBCAPW120X
Motor Power Cable (With Brake)	ASDBCAPW130X
Power Connector	ASD-CAPW1000
Encoder Cable	ASDBCAEN100X
Encoder Connector	ASDBCAEN1000

(X=3 indicates that the cable length is 3m; X=5 indicates that the cable length is 5m)

1kW Servo Drive and 1kW Low Inertia Servo Motor

Servo Drive	ASD-B2-1021-B
Low inertia Servo Motor	ECMA-C△0910□S
Motor Power Cable (Without Brake)	ASDBCAPW020X
Power Connector (Without Brake)	ASDBCAPW0000
Motor Power Cable (With Brake)	ASDBCAPW030X
Power Connector (With Brake)	ASDBCAPW0100
Increment Encoder Cable	ASDBCAEN000X
Encoder Connector	ASDBCAEN0000

(X=3 indicates that the cable length is 3m; X=5 indicates that the cable length is 5m)

1kW Servo Drive and 1kW Medium Inertia Servo Motor

Servo Drive	ASD-B2-1021-B
Medium inertia Servo Motor	ECMA-C△1310□S
Motor Power Cable (Without Brake)	ASDBCAPW120X
Motor Power Cable (With Brake)	ASDBCAPW130X
Power Connector	ASD-CAPW1000
Encoder Cable	ASDBCAEN100X
Encoder Connector	ASDBCAEN1000

(X=3 indicates that the cable length is 3m; X=5 indicates that the cable length is 5m)

1kW Servo Drive and 900W High Inertia Servo Motor

Servo Drive	ASD-B2-1021-B
High Inertia Servo Motor	ECMA-G△1309□S ECMA-GM1309PS
Motor Power Cable (Without Brake)	ASDBCAPW120X
Motor Power Cable (With Brake)	ASDBCAPW130X
Power Connector	ASD-CAPW1000
Encoder Cable	ASDBCAEN100X
Encoder Connector	ASDBCAEN1000

(X=3 indicates that the cable length is 3m; X=5 indicates that the cable length is 5m)

1.5kW Servo Drive and 1.5kW Medium Inertia Servo Motor

Servo Drive	ASD-B2-1521-B
Medium Inertia Servo Motor	ECMA-E△1315□S
Motor Power Cable (Without Brake)	ASDBCAPW120X
Motor Power Cable (With Brake)	ASDBCAPW130X
Power Connector	ASD-CAPW1000
Encoder Cable	ASDBCAEN100X
Encoder Connector	ASDBCAEN1000

(X=3 indicates that the cable length is 3m; X=5 indicates that the cable length is 5m)

2kW Servo Drive and 2kW Low Inertia Servo Motor

Servo Drive	ASD-B2-2023-B
Low Inertia Servo Motor	ECMA-C△1020□S
Motor Power Cable (Without Brake)	ASDBCAPW120X
Motor Power Cable (With Brake)	ASDBCAPW130X
Power Connector	ASD-CAPW1000
Encoder Cable	ASDBCAEN100X
Encoder Connector	ASDBCAEN1000

(X=3 indicates that the cable length is 3m; X=5 indicates that the cable length is 5m)

2kW Servo Drive and 2kW Medium Inertia Servo Motor

Servo Drive	ASD-B2-2023-B
Medium Inertia Servo Motor	ECMA-E△1320□S
Motor Power Cable (Without Brake)	ASDBCAPW120X
Motor Power Cable (With Brake)	ASDBCAPW130X
Power Connector	ASD-CAPW1000
Encoder Cable	ASDBCAEN100X
Encoder Connector	ASDBCAEN1000

(X=3 indicates that the cable length is 3m; X=5 indicates that the cable length is 5m)

2kW Servo Drive and 2kW Medium Inertia Servo Motor

Servo Drive	ASD-B2-2023-B
Medium Inertia Servo Motor	ECMA-E△1820□S
Motor Power Cable (Without Brake)	ASD-CAPW220X
Motor Power Cable (With Brake)	ASD-CAPW230X
Power Connector	ASD-CAPW2000
Encoder Cable	ASDBCAEN100X
Encoder Connector	ASDBCAEN1000

(X=3 indicates that the cable length is 3m; X=5 indicates that the cable length is 5m)

2kW Servo Drive and 1.3kW Medium High Inertia Servo Motor

Servo Drive	ASD-B2-2023-B
Medium High Inertia Servo Motor	ECMA-F11313□S
Motor Power Cable (Without Brake)	ASDBCAPW120X
Motor Power Cable (With Brake)	ASDBCAPW130X
Power Connector	ASD-CAPW1000
Encoder Cable	ASDBCAEN100X
Encoder Connector	ASDBCAEN1000

(X=3 indicates that the cable length is 3m; X=5 indicates that the cable length is 5m)

2kW Servo Drive and 1.8kW Medium High Inertia Servo Motor

Servo Drive	ASD-B2-2023-B
Medium High Inertia Servo Motor	ECMA-F11318□S
Motor Power Cable (Without Brake)	ASDBCAPW120X
Motor Power Cable (With Brake)	ASDBCAPW130X
Power Connector	ASD-CAPW1000
Encoder Cable	ASDBCAEN100X
Encoder Connector	ASDBCAEN1000

(X=3 indicates that the cable length is 3m; X=5 indicates that the cable length is 5m)

3kW Servo Drive and 3kW Low Inertia Servo Motor

Servo Drive	ASD-B2-3023-B
Low Inertia Servo Motor	ECMA-C△1330□4
Motor Power Cable (Without Brake)	ASDBCAPW120X
Motor Power Cable (With Brake)	ASDBCAPW130X
Power Connector	ASD-CAPW1000
Encoder Cable	ASDBCAEN100X
Encoder Connector	ASDBCAEN1000

(X=3 indicates that the cable length is 3m; X=5 indicates that the cable length is 5m)

3kW Servo Drive and 3kW Medium Inertia Servo Motor

Servo Drive	ASD-B2-3023-B
Medium Inertia Servo Motor	ECMA-E△1830□S
Motor Power Cable (Without Brake)	ASD-CAPW220X
Motor Power Cable (With Brake)	ASD-CAPW230X
Power Connector	ASD-CAPW2000
Encoder Cable	ASDBCAEN100X
Encoder Connector	ASDBCAEN1000

(X=3 indicates that the cable length is 3m; X=5 indicates that the cable length is 5m)

3kW Servo Drive and 3.5kW Medium Inertia Servo Motor

Servo Drive	ASD-B2-3023-B
Medium Inertia Servo Motor	ECMA-E△1835□S
Motor Power Cable (Without Brake)	ASD-CAPW220X
Motor Power Cable (With Brake)	ASD-CAPW230X
Power Connector	ASD-CAPW2000
Encoder Cable	ASDBCAEN100X
Encoder Connector	ASDBCAEN1000

(X=3 indicates that the cable length is 3m; X=5 indicates that the cable length is 5m)

3kW Servo Drive and 3kW Medium/High Inertia Servo Motor

Servo Drive	ASD-B2-3023-B
Medium High Inertia Servo Motor	ECMA-F△1830□S
Motor Power Cable (Without Brake)	ASD-CAPW220X
Motor Power Cable (With Brake)	ASD-CAPW230X
Power Connector	ASD-CAPW2000
Encoder Cable	ASDBCAEN100X
Encoder Connector	ASDBCAEN1000

(X=3 indicates that the cable length is 3m; X=5 indicates that the cable length is 5m)

Other Accessories (for ASDA-B2 series all models)	
Description	Delta Part Number
Communication Cable between Servo Drive and Computer	ASD-CARS0003
Regenerative Resistor 400W 100Ω	BR400W040
Regenerative Resistor 1kW 1000Ω	BR1K0W020

NOTE

1) (□) at the ends of the servo drive model names are for optional configurations. For the actual model name, please refer to the ordering information of the actual purchased product.
2) The boxes (△) in the model names are for encoder resolution types. Please refer to Chapter 1 for further information.
3) (□) in the servo motor model names represents brake or keyway / oil seal.

(This page is intentionally left blank.)

Appendix B Maintenance and Inspection

Basic Inspection

Item	Content
General inspection	Periodically check if the screws of the servo drive, the connection between the motor shaft and the mechanical system as well as the connection of terminal block and mechanical system are securely tightened.
	The gap of the control chamber and the installation of the cooling fan should free from oil, water or metallic particles. Also, the servo drive shall free from the cutting power of the power drill.
	If the control chamber is installed in the site which contains harmful gas or full of dust, please be ensured the servo drive is free from the harmful gas and dust.
	When making encoder cable or wire rods, please be ensured the wiring is correct. Otherwise, the motor may have sudden unintended acceleration or be burned.
Inspection before operation (has not applied to the power yet)	To avoid the electric shock, the ground terminal of the servo drive should firmly connect to the ground terminal of the control chamber. If the wiring is needed, wait at least 10 minutes after disconnecting the drive from the main supply power, or discharge electricity by discharge device.
	The splicing parts of the wiring terminal should be isolated.
	Make sure the wiring is correct so as to avoid the damage or any abnormity.
	Check if the electric conductivity objects including sheetmetal (such as screws) or inflammable objects are not inside the servo drive.
	Check if the control switch is in OFF status.
	Do not place the servo drive of external regenerative resistor on inflammable objects.
	To avoid the electromagnetic brake losing efficacy, please check if stop function and circuit break function can work normally.
	If the peripheral devices are interfered by the electronic instruments, please reduce electromagnetic interference with devices.

	Please make sure the external voltage level of the servo drive is correct.
Inspection before running the servo drive (has already applied to the power)	The encoder cable should avoid excessive stress. When the motor is running, please be ensured the cable is not frayed or over extended.
	Please contact with Delta if there is any vibration of the servo motor or unusual noise during the operation.
	Make sure the setting of the parameters is correct. Different machinery has different characteristic, please adjust the parameter according to the characteristic of each machinery.
	Please reset the parameter when the servo drive is in the status of SERVO OFF, or it may cause malfunction.
	When the relay is operating, make sure it can work properly.
	Check if the power indicator and LED display works normally.

Maintenance

- Please use and store the product in a proper site.
- Periodically clean the surface of the servo drive and servo motor so as to avoid the dust and dirt.
- Do not disassemble any mechanical part when in maintenance.
- Periodically clean the ventilation ports of the servo drive and do not use the product in a high-temperature site for a long time so as to avoid the malfunction.

The lifetime of machinery parts

- DC Bus Capacitor

  DC Bus Capacitor will be deteriorated by the affection of ripple current. Its lifetime is determined by the surrounding temperature and operating conditions. If it is operating in an air-conditioned site, its lifetime can up to 10 years.

- Relay

  The contact of switching power supply will wear and leads to poor contact. The lifetime of relay is influenced by the power supply capacity; thus, the accumulative time of switching power supply is about 100,000 times.

- Cooling Fan

  In continuous operation, the lifetime of the cooling fan is 2 to 3 years. However, if there is any unusual noise or vibration during inspection, place a new one is a must.

Life of Replacement Components

■ Smooth capacitor

The characteristics of smooth capacitor would be deteriorated by ripple current affection. The life of smooth capacitor varies according to ambient temperature and operating conditions. The common guaranteed life of smooth capacitor is ten years when it is properly used in normal air-conditioned environment.

■ Relay

The contacts will wear and result in malfunction due to switching current. The life of relay varies according to power supply capacity. Therefore, the common guaranteed life of relay is cumulative 100,000 times of power on and power off.

■ Cooling fan

The cooling fan life is limited and should be changed periodically. The cooling fan will reach the end of its life in 2~3 years when it is in continuous operation. However, it also must be replaced if the cooling fan is vibrating or there are unusual noises.

(This page is intentionally left blank.)