KOMPACT SERIES
TYPE TGRD

AUTOMATIC CONTROL DIGITAL SYSTEM FOR GAS AND OIL BURNERS AND APPLIANCES

APPLICATION

The microcontroller-based controllers of the KOMPACT series are specifically designed to control gas atmospheric burners (with or without fan in the combustion circuit) or oil atmospheric burners in non-permanent operation applications. The KOMPACT series type TGRD is created due to the requirement of an ignition and flame control device with integrated high efficiency electronic ignition transformer (a feature already available in the KOMPACT series type TGR) with all the options and the flexibility offered of the single microcontroller technology. These devices are provided with non-volatile or volatile lockout, in the first case restarting the controller from a safety lockout condition can be accomplished only by a manual reset, while in the second case restarting the controller from a safety lockout condition can be achieved only by the interruption of the power supply and its subsequent restoration (and not by switching the heating demand device).

The automatic controllers of this series are suitable for:

- Combi, heating and steam boilers;
- Hot air generators;
- Radiant tube heaters;
- Fan-assisted convector heater ;
- Water heater;
- Power washer;
- Furnaces;
- Monoblock burners.

The systems of this series are suitable to be used in gas fired hot air generators in accordance with EN 525, EN 1020 and EN 1319 standards or in oil fired hot hair generators in accordance with part 2 of DIN 4794 standard (December 1980 edition related to the hot air generators, only in version TW = 20s and TS = 5s).

FEATURES

The main features of this series are:

- **EC**- type certification (CE PIN **0476CR0813**) in accordance with **G**as **A**ppliances **D**irective 2009/142/EC (until 20 April 2018) and with **G**as **A**ppliances **R**egulation (EU) 2016/426 (from 21 April 2018);
- conformity to EC directives, Electromagnetic compatibility* EMC (immunity) 2014/30/EU and Low-voltage directive 2014/35/EU
- In accordance with EN298:2012 (European Standard for automatic gas and oil burner control systems and flame detection), EN676:2003 (European standard for automatic forced draught gas burners), DIN 4788 (German standard for fan-assisted burners) and with EN60730-2-5 (European Standard for automatic controls with C class software);
- Available versions with **UL**- type certification (File No. **MH46742**) in accordance with UL 372 and CSA C22.2 No. 199 (American standard for automatic gas and oil burner control systems);
- Detection based on the rectification property of the flame (by electrode or through UV emission detection by photodiode FD.. for gas versions);
- Visible light detection (by photo-sensors type FT, FC or through UV emission detection by photodiode FD.. for oil versions);
- A microcontroller based technology for precise and repeatable installation times with or without multiple ignition attempts;
- Integrated high efficiency electronic ignition transformer with remote ignition transformer management;
- Direct ignition of the burner or ignition by means of an intermittent or interrupted pilot;

ПРОМЭЛЕКТРОНИКА / sales@prom-elec.com

- Possibility of connecting remote lockout and reset signals;
- Unlock and status signals through multicolour led on board;
- Two independent safety contacts for driving the gas solenoid valve;
- Electrical service life at max. declared loading >250.000 operations;
- Possibility of connecting a resistor (100 ÷ 470 Kohm) in series to the lockout signal output in order to prevent the controller damage in case the lockout button wiring and the lockout signal wiring are reversed accidentally.

*) The compliance with EMC emission requirements must be checked after the burner control is installed in equipment.

TECHNICAL DATA

Nominal power supply voltage	200÷240V ~ @ 50-60 Hz
Upon request:	100÷120V ~ @ 50-60 Hz
UL Versions	Only 120V @ 60 Hz
Maximum power consumption:	
types TGRD6x – TGRD7x @240V:	50VA
types TGRD8x – TGRD9x @240V:	7VA
types TGRD6x – TGRD7x @120V:	35VA
types TGRD8x – TGRD9x @120V:	5VA
Operating temperature:	-20 °C ÷ +70 °C
Humidity:	maximum 95% at +40 °C
Protection degree:	IP00
Internal fuse:	
(@200÷240V)	4 A delayed-blow type
(@100÷120V) & (@200÷240V with option H):	6.3 A delayed-blow type
External fuse (recommended):	
(@200÷240V)	4A fast-blow type **(5)**
(@100÷120V) & (@200÷240V with option H):	6.3 A fast-blow type **(5)**
Max. total weight:	About 320 g

(5) The external fuse value must be selected according to the maximum applied load. This value must not anyway exceed the internal fuse value.

Table 1 – Main features of KOMPACT series TGRD type

Type	*Reset*	*App. (1)*	*EV2 (2)*	*EVP (3)*	*Tr. (4)*	
TGRD/61/71/81/91	Manual	**G/O**			**I/R**	
TGRD/62/72/82/92	Manual	**G/O**	*		**I/R**	
TGRD/61/71/81/91 with opt. E	Electrical	**G/O**			**I/R**	
TGRD/62/72/82/92 with opt. E	Electrical	**G/O**	*		**I/R**	
TGRD/63/73/83/93	Manual	**G/O**		*	**I/R**	
TGRD/63/73/83/93 with opt. E	Electrical	**G/O**		*	**I/R**	

(1) Application type:
- G: gas application, flame detection with Electrode or Photodiode FD..
- O: oil application, flame detection with Electrode or Phototransistor FT.., Photoresistor FC.. or Photodiode FD..

(2) EV2 solenoid valve: second stage output or flame presence signal given to a remote device.

(3) EVP solenoid valve: pilot valve output.

(4) Igniter (I: Integrated ignition transformer – R: Remote ignition transformer)

Times

Waiting/prepurge time (TW/TP):	1 … 120 s
Safety time (TS)	
- GAS versions: *TGRD6x – TGRD8x*:	3 … 120 s
- OLIO versions: *TGRD7x – TGRD9x*:	5 … 10 s
Spark ignition time (TSP):	**(11)**
Response time in case of flame failure (GAS versions):	< 1 s
Safety time during operation (OIL versions)	< 1 s
Postpurge times:	0 … 1800 s
Inter-waiting or Inter-purge time:	1 … 240 s
Opening delay of EV2 (Tdw, opt. W):	1 … 240 s
Lockout delay due to flame simulation (Tdk, opt. K):	
- GAS versions: *TGRD6x – TGRD8x*:	0 … 60 s
- OLIO versions: *TGRD7x – TGRD9x*:	5 … 60 s
Lockout on PA failure to close (Tdq, opt. Q) (6):	3 … 120 s
Lockout on TC failure to close (Tdq, opt. Q) (7):	3 s… 30'
Pre-ignition time (Tj, opt. J):	0 … 60 s
Post-ignition time (Tdt, opt. T): only OIL versions: *TGRD7x – TGRD9x*:	0 … 60 s
Pre-ignition time of flame pilot (Tmj): only versions: *TGRDx3:*	0 … 5 s
Post-ignition time of flame pilot (Tmt): only versions: *TGRDx3:*	0 … 60 s
Recycle attempts:	0 … 10
Varnish coating:	On request

Maximum contacts rating (see Connection Diagram)

Room thermostat:	0.5A cos φ = 1
Air pressure switch (6):	0.5A cos φ = 1
Pre-heater thermostat (7):	0.5A cos φ = 1
Safety thermostat (8):	0.5A cos φ = 1
Pre-heater RISC (10) :	0.5A cos φ = 1
Pilot solenoid valve EVP (10) :	0.25A cos φ ≥ 0.4
(with opt.H):	0.5A cos φ ≥ 0.4
First stage solenoid valve EV1 (10) :	0.25A cos φ ≥ 0.4
(with opt.H):	0.5A cos φ ≥ 0.4
Second stage solenoid valve EV2 (10) :	0.25A cos φ ≥ 0.4
(with opt.H):	0.5A cos φ ≥ 0.4
Fan V (10) :	2A cos φ ≥ 0.4
(with opt.H):	5A cos φ ≥ 0.4
Remote ignition transformer TR (10) :	1A cos φ ≥ 0.4
Lockout signal:	1A cos φ = 1
– With opt. R **(9)**:	0.5mA cos φ = 1
Partial capacity P_P=V+EVP+EV1+EV2 (10):	2.5A cos φ ≥ 0.4
(with opt.H):	5A cos φ ≥ 0.4
Global capacity P_G (10):	3.6A cos φ ≥ 0.4
(with opt.H):	5.2A cos φ ≥ 0.4

(6) Air pressure switch – Only in the gas versions TGRD6x - TGRD8x

(7) Pre-heater thermostat – Only in the oil versions TGRD7x - TGRD9x

(8) Safety thermostat – Only versions without air pressure switch (gas versions) and without pre-heater thermostat (oil versions).

(9) Lockout signal with protection resistor. In this case the drivable load is limited.

(10) Strictly comply with the global capacity P_G and partial capacity P_P

Connection Diagram

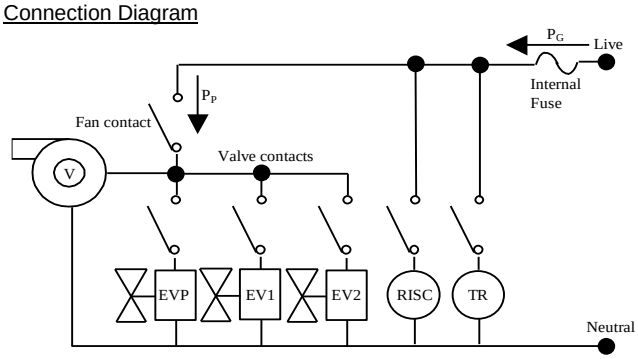

REMARK: Aim of above diagram is to show better exploiting of the **Partial capacity** depending on actual loads connected.

(11) Depending on option (4). See paragraph "options description", pag. 8.

Maximum length of external components cables:

Room thermostat:	20 m
Reset – remote lockout signal:	20 m
Ignition device (high voltage)**:**	2 m
All other external components	1 m

Under-voltage and over-voltage protection:
In case the power supply voltage is lower than about 148V_{AC} (about 68V_{AC} in the 100-120V_{AC} versions) or higher than 297V_{AC} the controller will go to the safety condition. It will restart when the power supply voltage will be higher than about 158VAC (about 78V_{AC} in the 100-120V_{AC} versions) or lower than about 288V_{AC} (about 138V_{AC} in the 100-120V_{AC} versions)

Flame monitoring – Gas versions
The flame detector uses the rectification property of the flame.

- Minimum ionization current: 0.5 μA(standard)
  On request: 1,2 μA
- Recommended ionization current:2÷3 times the minimum one
- Maximum length of the cable: 1 m
- Minimum insulation resistance of detection electrode
- and cable to earth: ≥ 10 MΩ
- Maximum electrode parasitic capacity: ≤ 1 nF
- Maximum short-circuit current: < 200μA AC

An important safety aspect is that the controller is more sensitive to flame at start or during the waiting/pre-purge time (negative differential switching).
In devices with 0.5 μA minimum ionization current it's possible to use FD(1-2)D sensors.

<u>Integrated ignition transformer</u>

Poles number:

standard TGRD6x:	1
with option X2:	2
standard TGRD7x	2
with option X1:	1

Ouput Peak Voltage (12):

2 poles:	2 x 12 kV
1 pole:	17 kV

Ouput RMS voltage:

2 poles:	2 x (2,8÷3,3) kV
1 pole:	8 kV

Output Peak Current:

2 poles:	55 mA
1 pole:	60 mA

Output RMS Current:

2 poles:	25 mA
1 pole:	28 mA

Ouput frequency (12):	8.5 kHz
Ouput frequency (13):	12 kHz

(12) Value measured with a 30 pF load.
(13) Value measured with a secondary in a short-circuit state.

Flame monitoring – Oil versions
In this type of application, flame is detected by a sensor or a photocell or phototransistor. The following table shows the various models produced by BRAHMA and classified according to their sensitivity.
Overall dimensions and fixing templates are shown in paragraph "Accessories"

Type	*Sensitivity*	*Side*
FC11 or FT11	1.5 ÷ 6.5 lux	Lateral and frontal
FC13 red or FT13	1.5 ÷ 6.5 lux	Lateral and frontal
FC13 blue or FT13	1.5 ÷ 3.0 lux	Lateral and frontal
FC14 red	1.5 ÷ 6.5 lux	Lateral and frontal
FC14 blue	1.5 ÷ 3.0 lux	Lateral and frontal

Flame monitoring type UV – Oil and Gas versions
The FD (1-2) D sensors are able to detect the ultraviolet light (UV spectral field from 290nm to 350nm) on application with blue flame burners.
The following table shows the various UV sensors classified according to their sensitivity.
Overall dimensions and fixing templates are shown in paragraph "Accessories"

Type	*Side*
FD1D	Frontal
FD2D	Lateral

Construction
The use of an innovative circuit and of surface mounting components has allowed to reduce the dimensions of the controller PCB. The plastic case (and the PCB varnish coating if requested) protect the controller against mechanical damage caused by crash, tampering, dust , and contact with external ambient. A varistor protects the controller from peak tensions on the mains supply due to, for instance, atmospheric discharges such as thunderbolts. An internal accessible fuse protects the controller relays in case of short circuit on the outputs (valves, fan and lockout signal). An integrated EMI filter reduces the electromagnetic interferences generated by ignition discharge.
Finally a resistor in series to the lockout output signal could be mounted, to protect the device from possible inversions of connection of the remote unlock contact.

Overall dimensions
The controllers of the KOMPACT series TGRD type can be supplied in different executions, but with the same case.
Figure 1 shows the controllers overall dimensions.

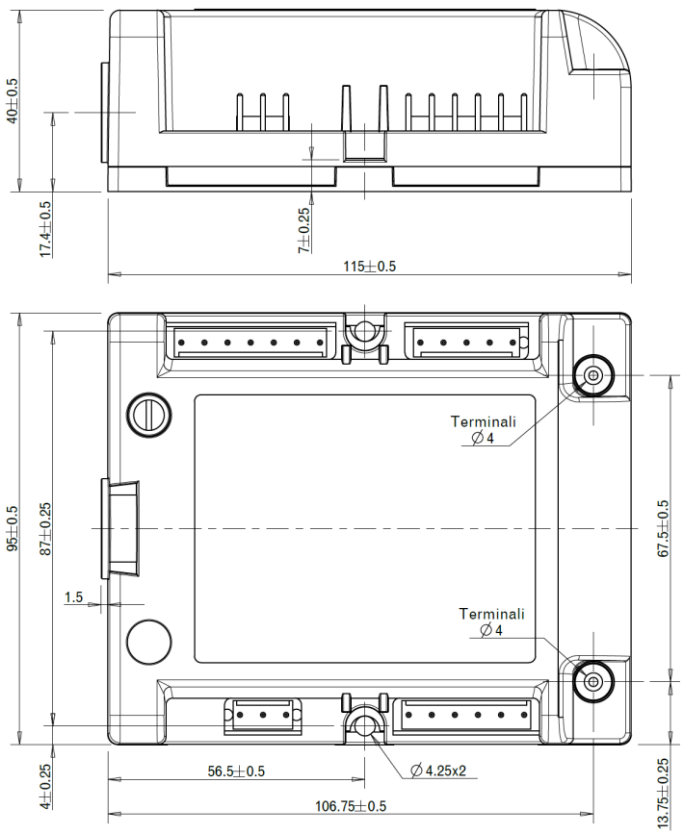

Fig. 1 – Overall dimensions
NOTE: In TGRD6X and TGRD7X models high voltage output terminals are cylindrical type of 4 mm diameter.

CONNECTION

Employing non-reversible connectors with a different number of poles makes the connection easy and reliable. For a correct use of the ignition transformer make sure that the discharge electrodes distance and maximum length of the ignition cables have been observed, see the technical data. To reduce the radiated electromagnetic interferences, it's recommended to insert a wire-wound power resistor with a value from 1kΩ to 4.7kΩ among the high voltage cables and the related discharge electrodes. The connectors to use for the standard connections (shown in fig. 2) could be provided as accessories on request. For the electric connection of the external components see paragraph "WIRING DIAGRAMS."

Standard accessories

The controllers are usually provided with a kit of female connectors and/or a reset button (see Fig.2).

Do not fit terminals and female connectors of different types.

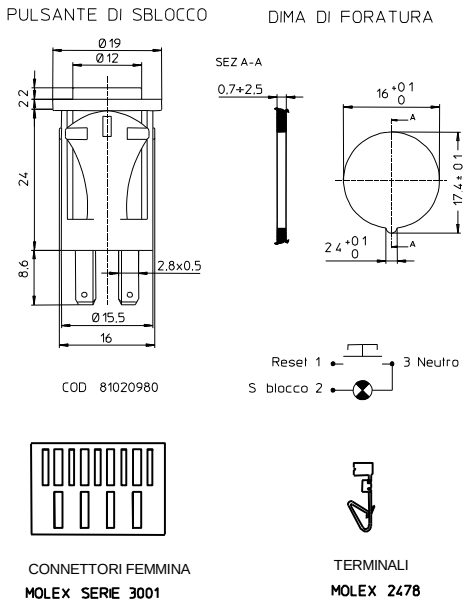

Fig. 2 – Standard accessories

The following figure 3 shows the various types of flame sensors produced by BRAHMA and employable in the oil appliances, with the dimensions and the fixing systems.

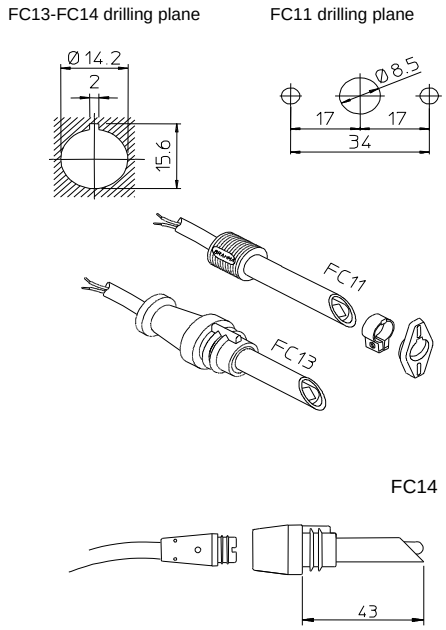

Fig. 3 – Type and fixing systems of FT1/FC1(1-3-4) sensors

Figure 4 shows the various types of flame sensors FD.. employable in the gas and oil appliances, with the dimensions and the fixing systems. To fix such flame sensors it is recommended to use Ø 4mm screws.

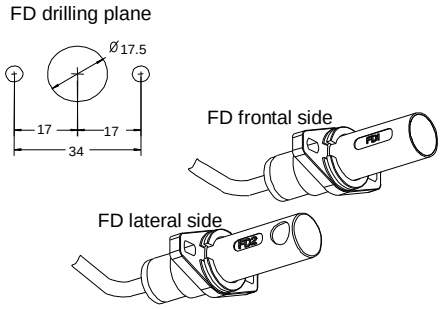

Fig. 4 – Type and fixing systems of FD.. sensors

In TGRD6X and TGRD7X models high voltage output terminals are cylindrical type of 4 mm diameter.

INSTALLATION DIRECTIONS

- <u>The controllers are safety devices; guarantee and responsibility of the manufacturer will be debarred if the products are tampered with by the user;</u>
- The device is designed to stay in running position for less than 24h (system for non-permanent operation). Reaching this limit causes a regulation shutdown in order to allow the controller to check its efficiency;
- The controller must be connected and disconnected without power supply;
- The controller can be mounted in any position;
- All operations (installation, maintenance, etc.) must be carried out by a qualified technician;
- Before any connection operation, completely isolate the system from power supply (multi-pole disconnection). Place the system safely to avoid accidental switch-on and make sure there is no voltage. If the system is not switched off, there is a risk of electric shock;
- Check the cables before starting operation. Incorrect wiring may damage the unit and compromise the system safety;
- During and after any operation (installation, maintenance, etc.), make sure that the type, timing and code are the ones provided, that the wiring is in good condition and perform the safety check in the " Commissioning notes";
- In the event of a fall or impact, the devices must not be started, as safety functions may be compromised even if no damage is visible to the outside;
- Faulty devices or damaged must be unplugged from power supply and cannot be used;
- Condensation, ice formation and liquids intake are not permitted;
- A ventilated installation ambient and a quite low temperature ensure the longest life of the controller;
- Before installing or replacing the controller make sure that its type, code and times are those required;
- The appliance in which the controllers are installed must provide adequate protection against the risk of electric shock (at least IP20);
- The remote reset button must be installed in proximity of the system, so that the system can be visible during reset;
- EMC emission requirements, according to the directive EN55014-1, shall be tested after the incorporation of the burner control system into the equipment;
- Burner controls has a designed lifetime* of 250,000 burner startup cycles which, under normal operating conditions in heating mode, correspond to approx. 10 years of usage (starting from the production date given on the type field). This lifetime is based on the endurance tests in the standard EN 298. A summary of the conditions has been published by the European Control Manufacturers Association (Afecor) (www.afecor.org). The designed lifetime is based on use of the burner control according to the manufacturer's technical notes. After reaching the designed lifetime in terms of the number of burner startup cycles, or the respective time of usage, the burner control has to be replaced by authorized personnel.

* The designed lifetime is not the warranty time specified in the Terms of Delivery

COMMISSIONING NOTES

When commissioning the plant or when doing maintenance work, make the following safety checks:

Safety check to be carried out	Anticipated response
Burner startup without gas supply	Lockout at the end of safety time (TS)
Burner operation with simulated loss of flame. For that purpose, close the fuel supply during operation and leave it in this state.	Recycle (or immediate lockout with V option).
Burner startup with response from air pressure switch interruption.	Continuous prepurge (or immediate lockout with Q option, delayed lockout with Qnn option).
Burner operation with air pressure failure simulation.	Recycle (or Immediate lockout with S option).

ELECTRICAL INSTALLATION

- The applicable national regulation and European standards (Ex. EN 60335-1 and EN 60335-2-102) related to the electrical safety must be respected;
- Phase-neutral polarity must be observed when connecting the controllers (without option N or N1) to power supply;
- The gas versions, provided with detection electrode, can be equipped with a polarity recognition. Not respecting the live-neutral polarity causes a non-volatile lockout at the end of the safety time; In case of “partial” short circuit or insufficient insulation between phase and earth, tension on detection electrode can be reduced till causing lock out of the controller due to impossibility of detecting the flame signal;
- Before starting the system check the wiring carefully. Wrong connections can damage the controller and compromise safety;
- The earth terminal of the controller, the metal frame of the burner and the earth on the mains supply must be well connected;
- Avoid putting the detection cable close to power or ignition cables;
- Use a heat resistant cable and detection electrode well insulated to ground and protected from possible moisture (or water in general);
- Use an ignition cable as short and straight as possible and keep it far from other conductors to reduce the EMC emission (max. length shorter than 2m and insulation voltage >25 kV);
- This serie is provided with internal fuses, but it must be protected by a fuse at least on the phase connection (see technical features).

CHECKING AT START-UP

Check the controller before the first start-up and also after every overhaul or a long period of no operation of the system. Before any ignition attempt make sure that the combustion chamber is empty, then make sure that:

- if the starting attempt occurs without fuel supply, the controller locks out at the end of the safety time (or more recycle attempts up to maximum 10 recycles, according to the option);
- if the fuel flow stops, while the device is in operation state, the power supply to the solenoid valve is interrupted within 1 second and the controller proceeds to lockout after a recycle (or more than one recycle up to max. 10 according to the settings);
- operating times and cycle are in compliance with the ones declared for the used controller type;
- the level of the flame signal is high enough (for flame signal test see figure 5 and 6);
- the ignition electrodes are adjusted in the most stable way for a 2-4 mm air spark gap (for more information see the specific technical data of the ignition device);
- the intervention of the regulators, limiters or safety devices causes a shut down of the controller according to the application type.

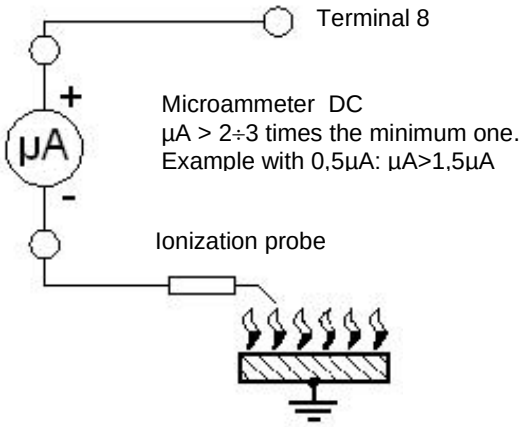

Fig. 5 – Flame signal measurement method in gas versions.

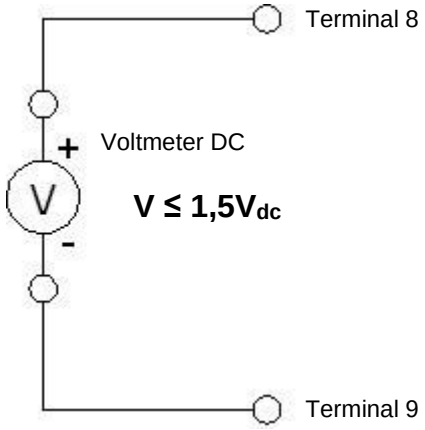

Fig. 6 – Flame signal measurement method in oil versions.

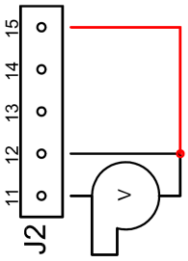

IMPORTANT NOTICE:
The exclusion of the air pressure switch in the GAS versions are intended for special applications where a check of the air flow is not required by the standard appliance.

Fig. 7 Wiring diagram for the exclusion of the check of the air pressure switch in GAS versions

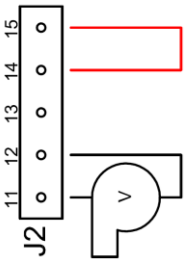

Fig. 8 Wiring diagram for the exclusion of the check of the preheater switch in OIL versions

GAS versions - operation

The following description refers to the standard operation cycle devices.

At every start the controller proceeds to a self-checking of its own components. During waiting time (TW) or pre-purge time (TP) the internal circuit monitors the correct functioning of the flame signal amplifier: A spurious flame signal or a fault in the amplifier which corresponds to the flame condition prevent the controller from starting.

In the types provided with combustion fan control, before pre-purge time starts, the controller checks the air pressure switch contacts to ensure a 'no air-flow' condition. Only if the test is positive the pre-purge time (TP) starts due to the commutation of the air pressure switch.

At the end of the waiting (TW) or pre-purge time (TP) the EV1 solenoid valve and ignition device are energised and the safety time begins (TS).
If flame is detected during the safety time the ignition device is de-energised and, in the models where it is provided, the main gas solenoid valve EV2 is energized. Conversely, if no flame is detected during the safety time then at the end of the same the controller proceeds to lockout, the solenoid valves are closed, the ignition device is de-energised and the lockout signal is activated. See cycle diagram to better understand its function.

OIL versions - operation

The following description refers to the standard operation cycle devices.
At every start the controller proceeds to a self-checking of its own components. When the room thermostat is closed the preheater is energized immediately; once the correct oil temperature is reached the preheater thermostat switches and signals the start of the ignition cycle to the controller: the combustion fan and the ignition transformer are energized (Pre-purge time TP and pre-ignition time) and the operation of the flame amplifier is checked. Any fault leading to a spurious flame signal prevents the controller from starting which causes the cycle to stop. In case the preheater thermostat opens during pre-purge time, the controller deactivates the combustion fan and the ignition transformer and proceeds to the waiting position. This condition remains till the preheater thermostat closes again; conversely the controller stops of cycle.
At the end of pre-purge time TP, the safety time begins and the controller energizes the EV1 solenoid valve. If no flame is detected within the end of safety time TS, then the controller goes to lockout and de-energizes the combustion fan, the ignition transformer and especially the solenoid valves while the lockout signal is activated. Conversely, at the end of the safety time TS the ignition transformer is deactivated and the second stage solenoid valve EV2 is energized.
See cycle diagram to better understand the operation of each controller.

Operation cycle variation

The possible cycle variations of the controllers are as follows:

– *Option 4 ("A", "B"): ignition mode*

Standard mode: the ignition device output is activated during all safety time TSP=TS-1. On request the spark:

- can be activated during all the safety time (TSP=TS, option "A");
- can be deactivated before nn seconds from the end of the safety time (option "Ann");
- deactivated, without or with delay, when a flame signal is detected ("B" and "Bnn" options).

– *Option 5 ("MJnn"): closing mode or pre-ignition of the solenoid valve pilot EVP (only in gas/oil versions of TGRDx3 type)*

Standard mode: the output of pilot solenoid valve (EVP) is activated at the start of safety time. On request, the pilot solenoid valve (EVP) can be activated nn seconds in advance Tmj starting from of safety time TS ("Mnn" Option).

– *Option 6 ("MTnn"): closing mode or post-ignition of the solenoid valve pilot EVP (only in gas/oil versions of TGRDx3 type)*

Standard mode: the output of pilot solenoid valve (EVP) is deactivated at the end of safety time. On request, the pilot solenoid valve (EVP) can be activated with delay Tmt of nn seconds starting from the end of safety time TS ("Mnn" Option).

– *Option 7 ("W", "Wnn"): opening mode of the second stage solenoid valve EV2 or of an auxiliary device*

Standard mode: the output of the second stage (or auxiliary device) is activated when a flame signal is detected. On request, the second stage (or auxiliary device) can be activated at the end of safety time TS ("W" Option), or with nn second delay starting from the end of safety time TS ("Wnn" Option).

– *Option 8 ("K", "Knn"): Lockout due to parasite flame*

Standard mode: if a spurious flame is detected at start-up or during waiting/prepurge/preignition time, the device stops the cycle, without lockout (without limit, continuous prepurge stage). On request, the device proceeds to immediate lockout ("K" Option) or with a delay (settable upon request) of nn seconds ("Knn" Option).

– *Option 9 ("Q", "Qnn"): failure or insufficiency of air flow or preheater/safety thermostat failure to close at start-up*

Standard mode: if the device detects no commutation of the air pressure switch (gas versions) or the preheater thermostat (oil versions) or the safety thermostat (gas and oil versions) during start-up (or waiting/prepurge time), it stops the cycle, without lockout (without limit, continuous prepurge). On request, the device proceeds to immediate lockout ("Q" Option) or with a delay (settable upon request) of nn seconds ("Qnn" Option).

– *Option 10 ("S", "Snn"): failure or insufficiency of air flow or preheater/safety thermostat failure to open in running position*

Standard mode: if the device detects a loss of air pressure switch (gas versions) or the preheater thermostat (oil versions) or the safety thermostat (gas and oil versions, with "GT" Option) during the running position, then it stops the cycle, without lockout (without limit, continuous prepurge stage). On request, the device proceeds to immediate lockout ("S" Option) or lockout after "nn" number of events ("Snn" Option).

– *Option 11 ("V", "Vnn"): Flame failure in running position*

Standard mode: recycle without lockout (without limit, continuous prepurge) with flame failure in running position. On request, the device proceeds to immediate lockout ("V" Option) or lockout after "nn" number of events ("Vnn" Option).

– *Option 12 ("Pnn", "PTnn", "Cnn", "CTnn"): post-purge time of the main combustion motor fan*

Standard mode: without any post-purge time on the main combustion motor fan output in case of heating demand failure. On request, post-purge (settable upon request) of nn seconds ("Pnn" or "PTnn" Options). With "Pnn" option post-purge is effected regardless of heating demand; conversely, with "PTnn" option post-purge can be interrupted by the heating demand restoration and consequently the device goes to an ignition cycle.
On request, post-purge of nn seconds due to shut off in running position (settable upon request) ("Cnn" or "CTnn" Options). With "Cnn" option post-purge is effected regardless of heating demand; conversely, with "CTnn" option post-purge can be interrupted by the heating demand restoration and consequently the device goes to an ignition cycle.

– *Option 13 ("Ynn", "YnnRmm"): recycle attempts due to ignition failure*

Standard mode: the device proceeds to immediate lockout (without recycle) if the flame isn't detected at the end of safety time. On request, the device proceeds to lockout after "nn" recycle attempts ("Ynn" Option, the attempts number is settable upon request). On request, with "YnnRmm" option, the "nn" attempts number is restored with "mm" upon flame failure during the running condition (only for European devices, i.e. Y3R0 recycle attempts according to EN646 and EN746-2).

– *Option 14 ("Dnn"): recycle attempts due to ignition or flame failure in running position*

Standard mode: the recycle attempts due to flame failure ("Vnn" Option) are independent from the multiple ignition attempts ("Ynn" Option), for example if in the device "V3" and "Y5" options are available it carries out:

- 3 recycles due to flame failure and 5 ignition attempts (the sum is 8 ignition cycles).

On request, with "D" option, it is possible to set up the total recycle attempts; in this case the recycle attempts due to flame failure and the ignition attempts must have the same value. For example if in the device options "V3 Y3 D" are available it carries out 3 recycle attempts for ignition or flame failure during running position (total = 3 ignition recycles).

– *Option 15 ("Inn"): inter-waiting or inter-purge time*

Standard mode: without interwaiting/interpurge. On request, with "Inn" option, it is possible to set the interpuge time during the ignition recycles (only in combination with "Ynn" Option).

– *Option 17 ("G", "GT", "GRnn", "GZ"): Check of Air pressure switch or minimum Revolutions Per Minute or preheater/safety thermostat*

Standard mode: the device performs the ignition cycle and checks the air pressure switch (PA in gas versions) or the preheater thermostat (TC in oil versions), without checking the safety thermostat (TS). On request, with "G" option, the device performs the ignition cycle without any check. On request, with "GT" option, the device performs the ignition cycle and checks a safety thermostat. On request, with "GRnn" option, the device performs

the ignition cycle and checks the minimum Revolutions Per Minute (RPM), settable upon request (nnx100 rpm), of brushless fan motor. On request, with "GZ" option, the device (oil versions) performs the ignition cycle and checks a preheater thermostat. When the signal fails to switch during start-up, the device stops the cycle (or it locks out only in combination with “Q” Option), and this condition can change only with the commutation of the device, with "GT", “GRnn” and GZ " options, the device proceeds to an immediate safety shut down (or lockout only in combination with “S” Option) due to signal failure (PA, TC, TS, RPM) during operation.

– *Option 18 (“Jnn”): pre-ignition*

Standard mode: without any pre-ignition (gas versions), with pre-ignition (oil versions, the pre-ignition time coincides with the pre-purge time). On request, it is possible to modify the pre-ignition time and activate the ignition transformer nn seconds before the beginning of safety time TS ("Jnn" Option).

– *Option 19 (“Tnn”): post-ignition (only oil versions)*

Standard mode: the ignition transformer is shut off at the end of safety time TS. On request, it is possible to set a postignition time and keep activated the ignition transformer for nn seconds after the end of safety time TS ("Tnn" Option).

– *Option 21 (“XP”): ignition transformer*

Standard mode: the ignition transformer is activated without delay for cooling. On request, if the device is subject to a lot of frequent ignitions, it is possible to set a delay time of the heating demand to allow the transformer ignition to cool down ("XP" Option).

NOTES FOR THE DISPOSAL OPERATION

The controller contains electronic components and it must not be disposed of as a domestic waste. For the disposal operation refer to the local rules concerning special waste.

DIAGNOSTICS

In lockout condition with the pushing of the reset button for more than 5 sec., the diagnostic routine is activated (alarm signal with blinks). The alarm signal is turned off for a number of times that depends on the lockout type with a pause of 2sec. between a series of blinks and the next. The table below shows the lockout type or the malfunctioning with the number of blinks.

Error Code Table

Blinks code of Alarm signal (red led)	Potential Cause
2 off blinks • •	Flame failure at the end of safety time «TS»: - Defective or soiled fuel solenoid valves - Defective or soiled flame detector - Poor adjustment of burner or no fuel - Defective ignition equipment
3 off blinks • • •	Air pressure switch failure to close or the Revolutions Per Minute are below the minimum set value (TGRD6x-TGRD8x). Preheater thermostat failure to close (TGRD7x-TGRD9x). Safety thermostat failure to close (TGRDxx)
4 off blinks • • • •	Extraneous light/Flame simulation at start-up
5 off blinks • • • • •	Air pressure switch failure to open or the Revolutions Per Minute are more than the minimum set value (TGRD6x-TGRD8x)
6 off blinks • • • • • •	Air pressure switch failure or the Revolutions Per Minute, in running position, are below the minimum value (TGR6x-TGR8x). Safety thermostat failure in running position (TGRDxx).
7 off blinks • • • • • • •	Flame failure in running position.
8-14 off blinks	Generic internal failure

During the time cause of fault diagnosed, the control output are deactivated (the burner remains shut down, lockout condition). Diagnostics of the cause of fault is quit and the burner is switched on again by resetting the burner control, pushing the lockout reset button for about 1 sec. (< 3 seconds).

On request, with option “RL1” (see option no. 16), diagnostic messages are displayed also on remote lockout signalling (SB) and diagnostic routine can be enabled also by remote reset button (RE).

SIGNALS DURING OPERATION

In the various operation conditions the device is able to signal the operation state through a multicoloured LED located in the reset button (on board of the device). The colours legend is as follows:

Stable green:
Operating state with good flame signal

Stable orange:
Ignition state

Stable red:
Lockout state

Blinking green:
Operating state with bad flame signal

Blinking orange:
Ignition state with good flame signal

Blinking red:
Diagnostics in lockout state or parasite flame

Alternating green/orange:
Ignition state with bad flame signal

Alternating red/orange:
Low/high voltage

It's possible to change upon request the operation status signals of multicoloured LED.

CONTROLLER RESET

Non-volatile lockout (manual reset)

When the controller goes to a non-volatile lockout, in order to reset the system the reset button must be pressed until the lockout signal is shut off (< 5 seconds).

Volatile lockout (electrical reset)

In case of a volatile lockout the controller can be reset by interrupting and then restoring the power supply. It’s not possible to reset the system by shutting off the heating demand device.

CONTROLLERS DENOMINATION

Type	Options
TGRD (1) (2) TP TS	(3) (4) (5) (6) (7) (8) (9) (10) (11) (12) (13) (14) (15) (16) (17) (18) (19) (20) (21) (22) (23) (24) (25) (26) (27)

Type description

(1) **Type application and ignitor**

6: GAS application device with integrated electronic ignition transformer
7: OIL application device with integrated electronic ignition transformer
8: GAS application device with remote ignition transformer
9: OIL application device with remote ignition transformer

(2) **Valves**

1: Direct ignition (one solenoid valve, single-stage)
2: Intermittent first stage (two solenoid valve, double-stage)
3: Interrupted pilot (three solenoid valve, treble-stage)

Options description (see also paragraph *"Operation cycle variation"*).

(3) **Type lockout**

No letter: Non –volatile lockout
E: Volatile lockout

(4) **Ignition mode**

No letter: ignition spark operates during safety time TSP=(TS-1). Standard mode.
A: ignition spark operates during all safety time TSP=TS.
Ann: ignition spark is switched off nn seconds before the end of safety time.
B: ignition spark is switched off when flame presence is detected, without delay.
Bnn: ignition spark is switched off when flame presence is detected, with delay of nn seconds.

(5) **Opening mode or pre-ignition of the pilot solenoid valve EVP (TGRDx3 gas/oil versions)**

No letter: without pre-ignition (Tmj=0, EVP valve activated from the beginning of safety time TS). Standard mode.
MJnn: with pre-ignition Tmj of nn second in advance starting from safety time TS.

(6) **Closing mode or post-ignition of the pilot solenoid valve EVP (TGRDx3 gas/oil versions)**

No letter: EVP deactivated at the end of the safety time (Tmt=0). Standard mode.
MTnn: with interrupted pilot in running position at Tmt of nn seconds starting from the end of safety time TS.

(7) **Opening mode of the second stage solenoid valve EV2 or of an auxiliary device**

No letter: without delay in flame presence. Standard mode.
W: at the end of safety time TS.
Wnn: with delay of nn seconds starting from the end of safety time TS.

(8) **Lockout due to parasite flame**

No letter: The cycle stops , without lockout (without limit, continuous prepurge stage). Standard mode.
K: lockout without delay.
Knn: lockout with delay of nn seconds.

(9) **Failure (or insufficiency) of air flow or preheater thermostat failure to close (TGRD7x-TGRD9x oil versions) or safety thermostat failure to close (gas/oil TGRDxx versions) at start-up.**

No letter: The cycle stops, without lockout (without limit, continuous prepurge stage). Standard mode.
Q: lockout without delay.
Qnn: lockout with delay of nn seconds.

(10) **Failure (or insufficiency) of air flow or preheater thermostat failure to close (TGRD7x-TGRD9x oil versions) or safety thermostat failure to close (gas/oil TGRDxx versions) during running position.**

No letter: The cycle stops, without lockout (without limit). Standard mode.
S: immediate lockout.
Snn: lockout after "nn" number of signal failures during running position.

(11) **Flame failure in running position**

No letter: recycle, without lockout (no limit). Standard mode.
V: immediate lockout.
Vnn: lockout after "nn" recycle attempts.

(12) **Post-purge time on the main combustion motor fan**

No letter: without post-purge time. Standard mode.
Pnn: post-purge time of nn seconds due to heating demand failure, it cannot be interrupted by the heating demand restoration
PTnn: post-purge time of nn seconds due to heating demand failure, it can be interrupted by the heating demand restoration
Cnn: post-purge time of nn seconds due to shut-off in running position, it cannot be interrupted by the heating demand restoration
CTnn: post-purge time of nn seconds due to shut-off in running position, it can be interrupted by the heating demand restoration

(13) **Recycle attempts due to ignition failure**

No letter: lockout without recycle. Standard mode.

Ynn: lockout after "nn" recycle attempts.

YnnRmm*: nn multiple recycle attempts, with restoring of mm recycle attempts in operation (see *"TECHNICAL DATA"* paragraph)

* ***Remark***: *Option available only for devices with European Certification, i.e. Y3R0 3 recycles according to EN676 and EN746-2, single attempt to recycle upon flame failure during the running condition.*

(14) **Recycle attempts due to ignition or flame failure in running position.**

No letter: the number of recycle attempts due to ignition failure (opt. Ynn) and number of recycle attempts due to flame failure in running position (opt. Vnn) are independent of each other. Standard mode.

D: the number of recycle attempts due to ignition failure (opt. Ynn) and number of recycle attempts due to flame failure in running position (opt. Vnn) are the same.

(15) **Inter-waiting or inter-purge time**

No letter: without inter-waiting or inter-purge time. Standard mode.

Inn: with inter-waiting or inter-purge time of nn seconds.

(16) **Remote lockout output**

No letter: output without any protection against cabling mistakes of the reset button. Standard mode.

R: output with internal resistor to protect the reset button against the inversion of its wiring

R1: output without remote lockout signal

RL1: diagnostic function can be enabled also by remote reset -button (RE) and signalling is available also on remote lockout output (SB)

Remark: with option R the output current of the lockout signal is limited, see also paragraph "*Maximum contacts rating*").

(17) **Air pressure switch OR minimum Revolutions Per Minute or preheater thermostat (TGRD7x-TGRD9x oil versions) or safety thermostat (gas/oil TGRDxx versions) check.**

No letter: Air pressure switch (gas versions) or preheater thermostat (oil versions, with the check also during running position) are checked while safety thermostat is not checked. Standard mode.

G: without any check.

GT: safety thermostat is checked

GRnn: check of the minimum Revolutions Per Minute (nnx100 rpm) of brushless fan motor.

GZ: preheater thermostat is checked (not checked during running position).

GP with air pressure switch check.

Remark: *The "G" option in the GAS versions are intended for special applications where checking the air flow is not required by the standard appliance. The "GZ" and "GP" options are intended only for OIL versions.*

(18) **Pre-ignition**

No letter: TGRD6x-TGRD8x versions: without pre-ignition. Standard mode.
TGRD7x-TGRD9x versions: the pre-ignition time coincides with the pre-purge time. Standard mode.

J: TGRD6x-TGRD8x versions: the pre-ignition time coincides with the pre-purge time.
TGRD7x-TGRD9x versions: without pre-ignition.

Jnn: with pre-ignition time of nn seconds before the beginning of safety time TS.

(19) **Post-ignition (only oil versions TGRD7x-TGRD9x)**

No letter: without post- ignition. Standard mode.

Tnn: with post- ignition of nn seconds after the safety time TS.

(20) **Connection to the mains supply (only gas versions TGRD6x-TGRD8x)**

No letter: Live-neutral polarized (phase-sensitive controller). Standard mode.

N: Not polarized (phase-insensitive controller)

N1: Live-live (controller for phase-phase network)

Remark: the N option can not be implemented in 100-120Vac 50/60Hz versions. The N and N1 options can not be implemented in all TGRDx3. Versions

(21) **Ignition transformer (see also paragraph "***Integrated ignition transformer***").**

No letter: TGRD6x versions: with one output pole and without delay for cooling. Standard mode.
TGRD7x versions: with two output poles and without delay for cooling. Standard mode.

X1: with one output pole and without delay for cooling (only TGRD7x versions).

X2: with two output poles and without delay for cooling (only TGRD6x versions).

XP1: with one output pole and with delay for cooling.

XP2: with two output poles and with delay for cooling.

Remark: these options can be implemented only in the TGRD6x-TGRD7x versions.

(22) **Maximum contacts rating (only versions @ 200÷240V).**

No letter: the standard contacts rating. Standard mode.

H: the maximum contact rating higher than the standard.

Remark: the values of the maximum contacts and internal fuse are reported in the paragraph "TECHNICAL DATA".

(23) **Actuators control for double/treble-stage burners with or without modulation.**

No letter: without control. Standard mode.
SA: with control. Prepurge time TP checked with volume of air at low fire position during start-up and operation.
SAnn: with control. Prepurge time TP checked with nominal volume of air.
Minimum position reached nn seconds before the end of prepurge time TP.

***Remark**: with or without control of modulator for regulating the gas. These options can be implemented only in the TGRDx3 versions (see also, "WIRING DIAGRAMS WITH AUXILIARY DEVICES").*

(24) **Multi-fire burners control.**

No letter: without control. Standard mode.
REn: with control of multi-fire burners (n fires) with an auxiliary flame detector device.

***Remark:** These options can be implemented only in the TGRD versions for industrial appliances without remote unlock (see also, "WIRING DIAGRAMS WITH AUXILIARY DEVICES").*

(25) **Operating of the external ignitor transformer (available only for versions TGRD8x–TGRD9x).**

No letter: ignitor transformer de-actived during operating without delay for cooling. Standard mode.
XP: delay for ignitor transformer's cooling (available only for versions TGRD8x-TGRD9x).
XC: ignitor transformer supplied during operating (permanent operation, available only for version TGRD9x).

(26) **Reduction of device noise emission.**

No letter: without reduction. Standard mode.
F: with reduction (option available only for devices with European certification).

(27) **Compensation of the parasite flame or spurious light.**

No letter: No compensation. Standard mode.
FC: parasite flame (electrode probe) or spurious light (photocell sensor) is compensated at start-up of the burner.

***Remark**: option available only for devices with European certification. The device, during the start-up of burner compensates the parasite flame or spurious light. In case of no parasite flame or spurious light, the minimum value of the sensitivity of the device is the declared value. In case of the parasite flame or spurious light, the minimum value of the sensitivity of the device is automatically compensated during the start-up sequence. In the gas devices the compensation can change from 0 to 1.25uA, while in the oil devices from 1MΩ to 20.5KΩ*

WIRING DIAGRAMS

The wiring diagrams below show the most complete versions of the controller. It is easy to understand which parts can be present or absent according to the different options requested.

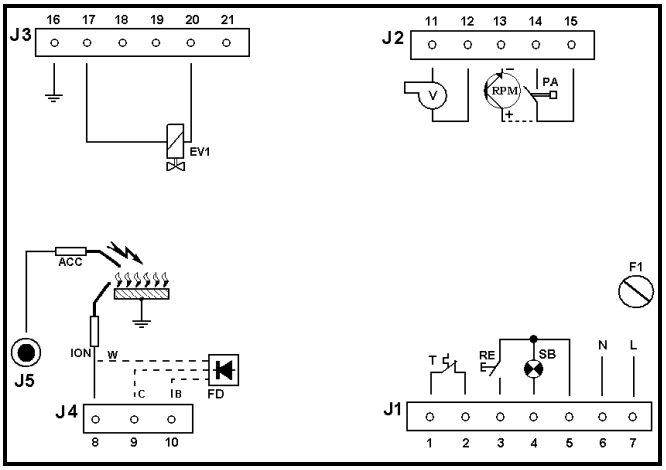

Type TGRD61

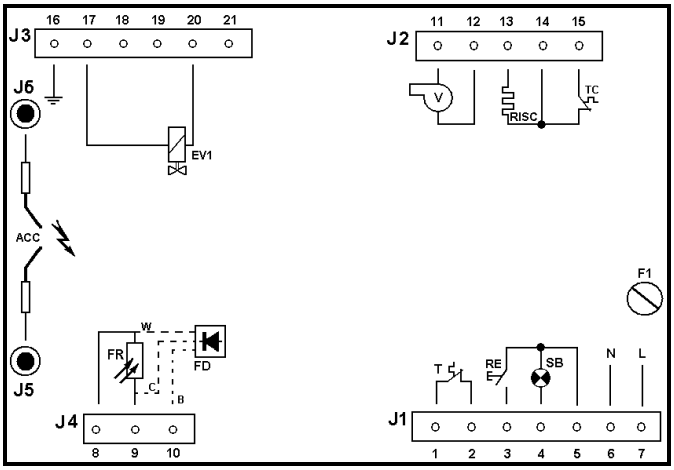

Type TGRD71

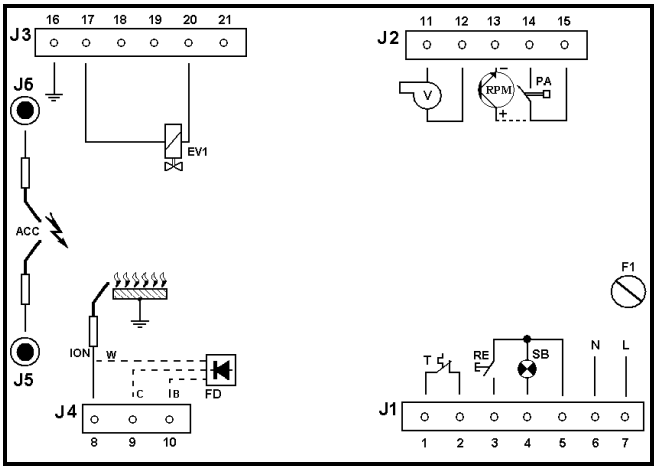

Type TGRD61 opt- X2

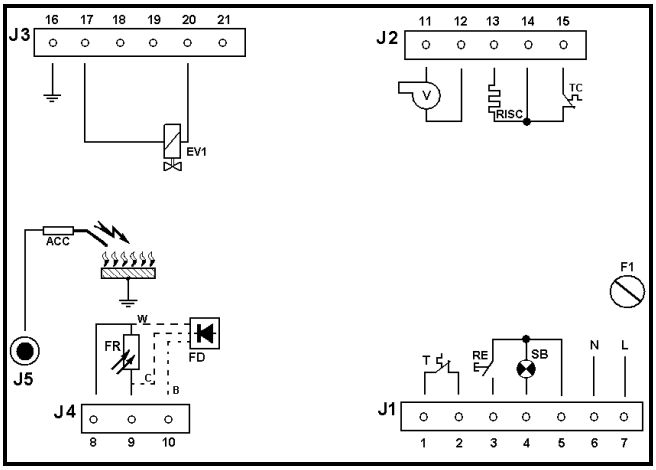

Type TGRD71 opt- X1

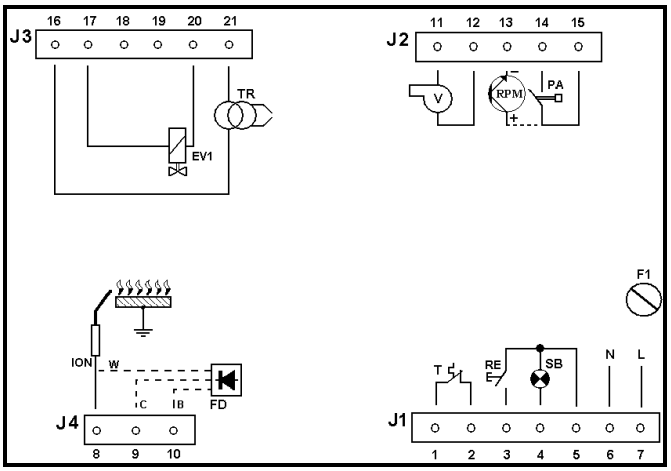

Type TGRD81

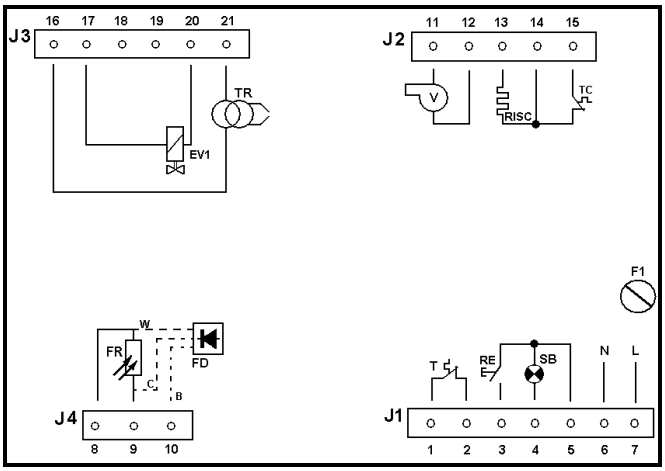

Type TGRD91

Room Thermostat

Preheater

Preheater Thermostat

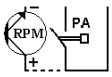

Air pressure switch or Revolutions Per Minute

Combustion fan

Ignition Tranformer

Reset

***Main* solenoid valve**

***Second* stage solenoid valve**

Pilot solenoid valve

Flame sensor (visible light)

Flame sensor (UV light)

Flame sensor (ionization)

Lockout signa

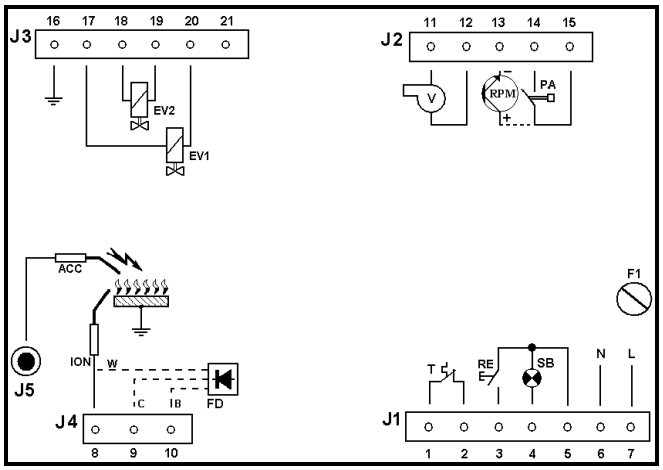

Type TGRD62

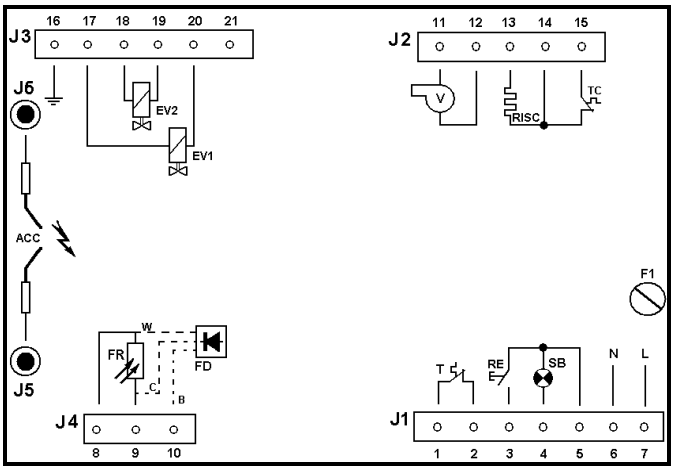

Type TGRD72

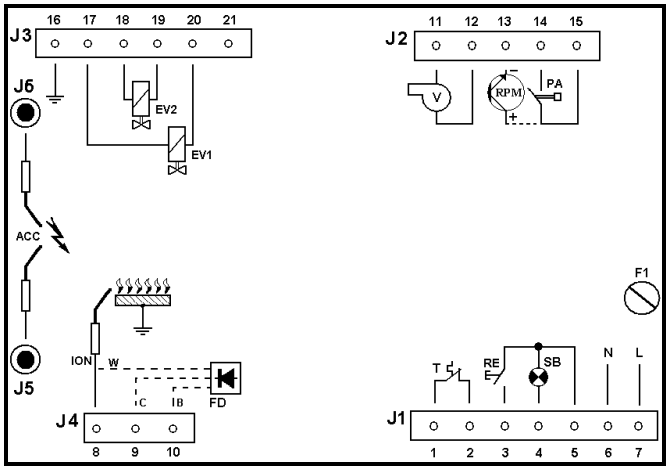

Type TGRD62 opt. X2

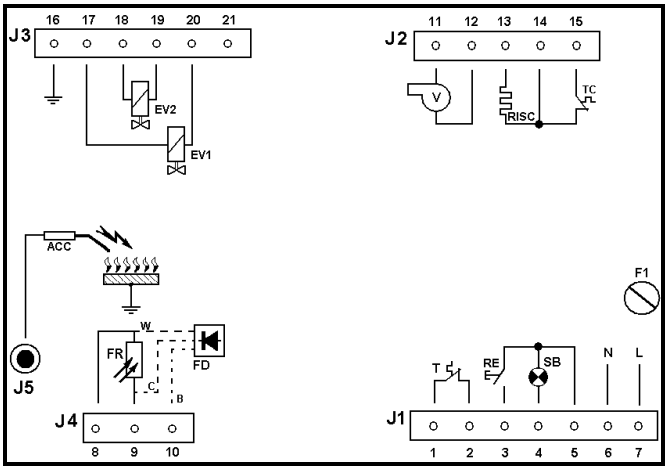

Type TGRD72 opt. X1

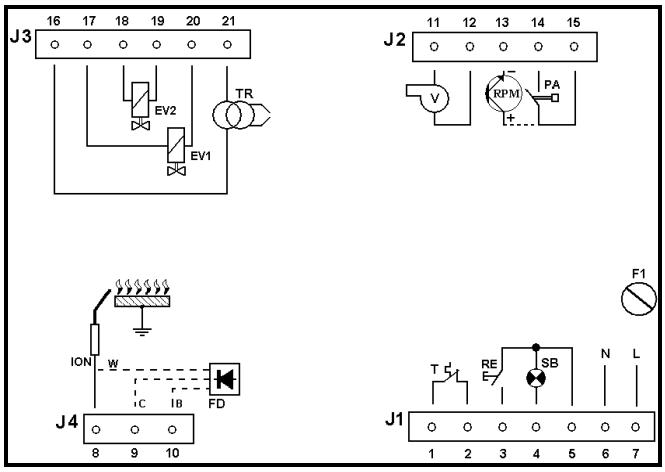

Type TGRD82

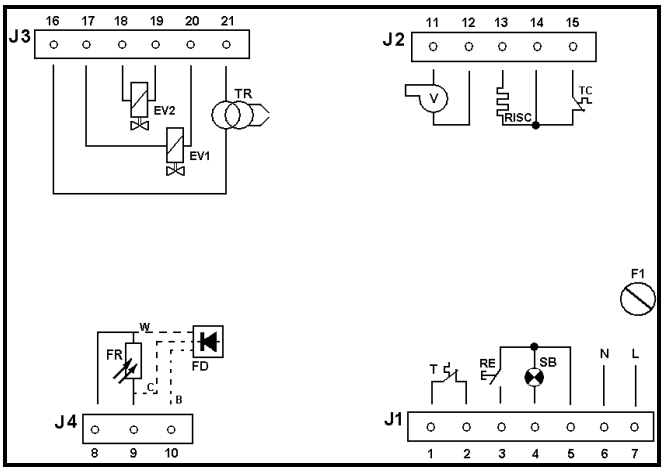

Type TGRD92

Room Thermostat

Preheater

Preheater Thermostat

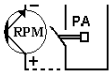

Air pressure switch or Revolutions Per Minute

Combustion fan

Ignition Tranformer

Reset

Main solenoid valve

Second stage solenoid valve

Pilot solenoid valve

Flame sensor (visible light)

Flame sensor (UV light)

Flame sensor (ionization)

Lockout signal

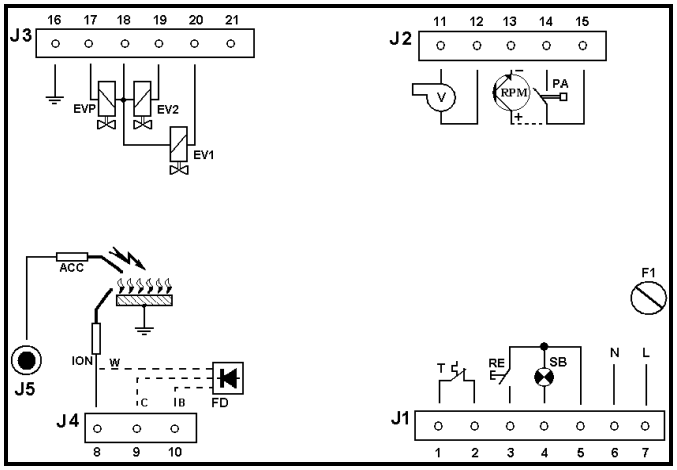

Type TGRD63

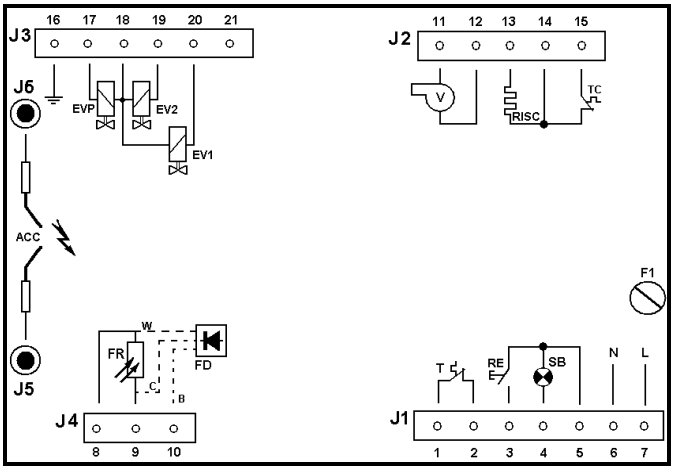

Type TGRD73

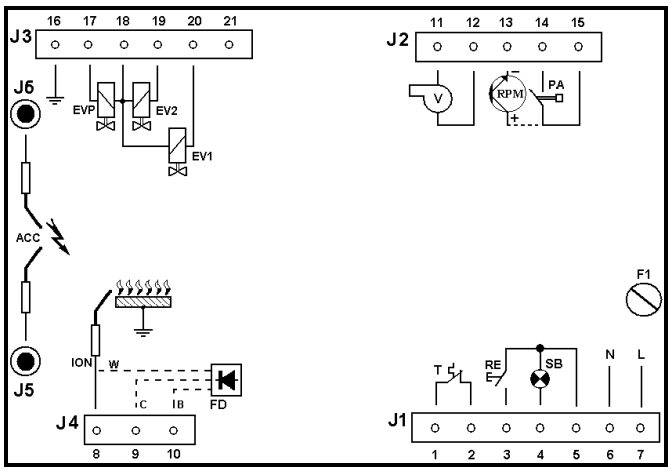

Type TGRD63 opt. X2

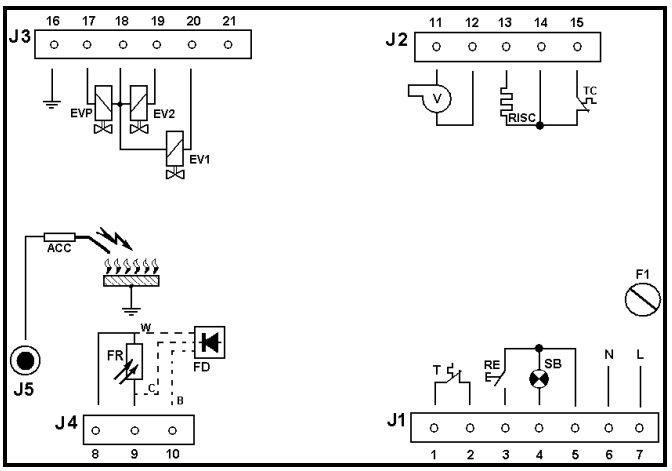

Type TGRD73 opt. X1

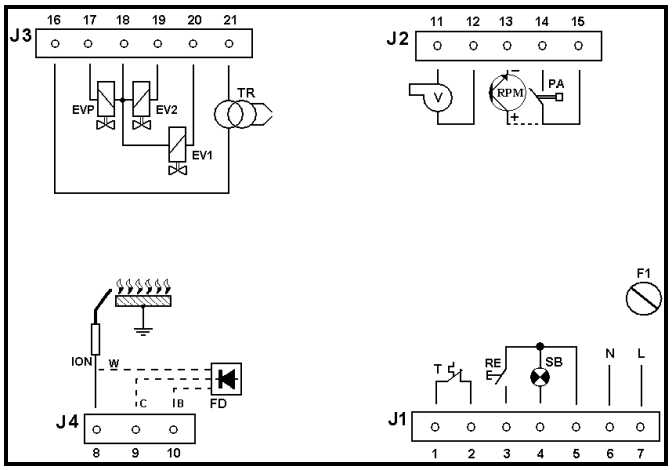

Type TGRD83

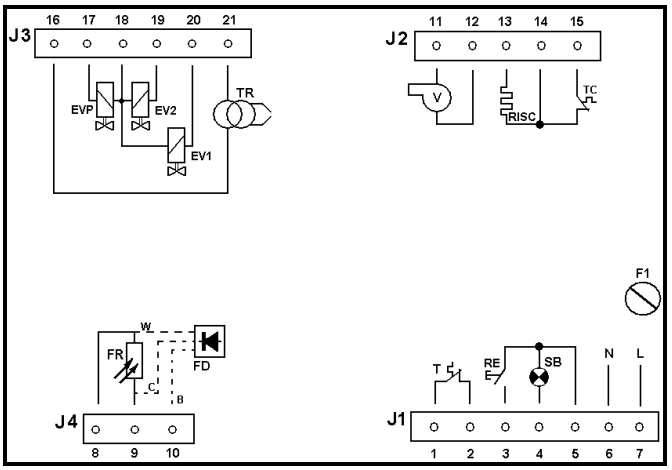

Type TGRD93

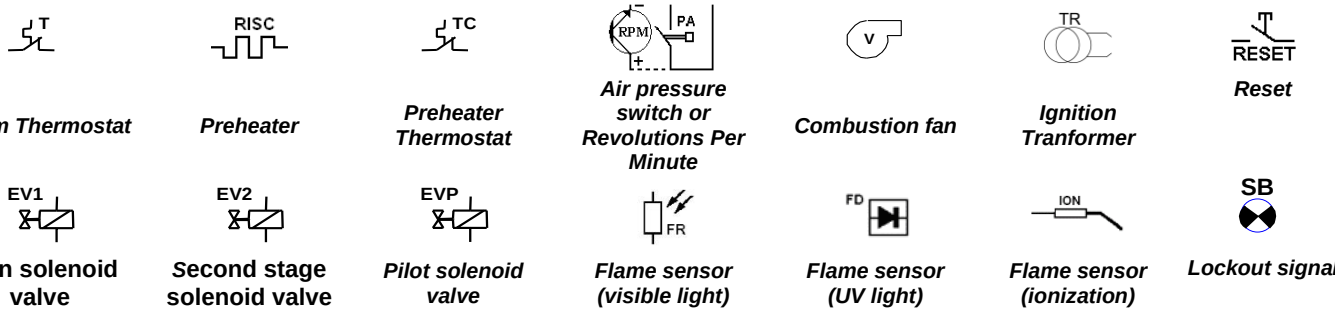

Room Thermostat	*Preheater*	*Preheater Thermostat*	*Air pressure switch or Revolutions Per Minute*	*Combustion fan*	*Ignition Tranformer*	*Reset*
***Main* solenoid valve**	***Second* stage solenoid valve**	*Pilot solenoid valve*	*Flame sensor (visible light)*	*Flame sensor (UV light)*	*Flame sensor (ionization)*	*Lockout signal*

REMARKS:

1. In the versions where "GT" option is available, the safety thermostat replaces the air pressure (PA) in the gas versions (TGRD6x - TGRD 8x) and the preheater thermostat (TC) in the oil versions (TGRD7x - TGRD 9x).
2. RPM connectable only in the versions where "GR" option is available, the control signal of revolutions per minute (RPM) replaces the signal of air pressure (PA) in the gas versions (TGRD6x - TGRD 8x). With "GR" option it's not possible to connect the air pressure switch.

OPERATING CYCLES

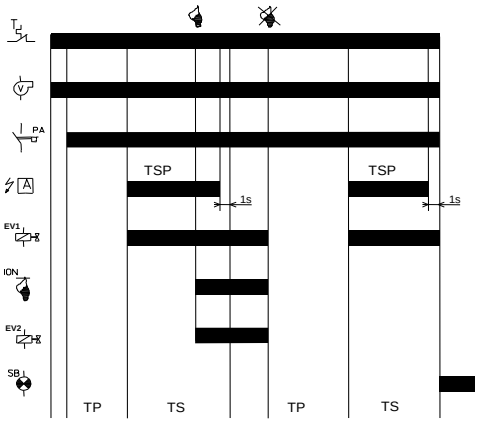

TGRD62 – TGRD82

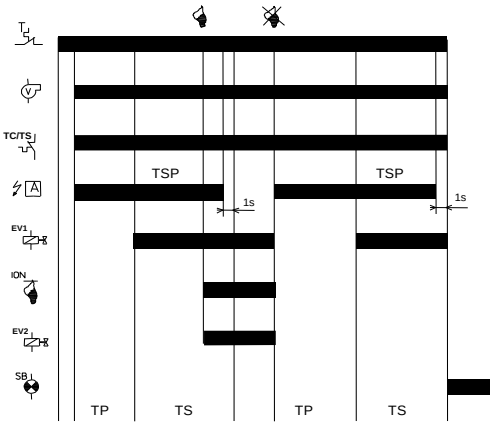

TGRD72 – TGRD92

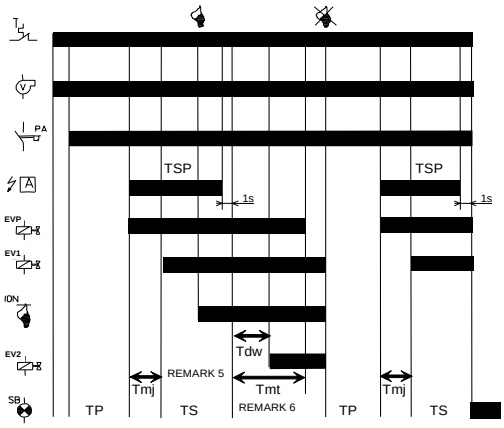

TGRD63 – TGRD83

AVAILABLE OPTIONS

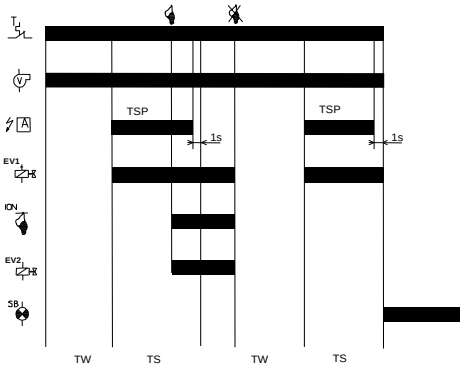

OPTION G

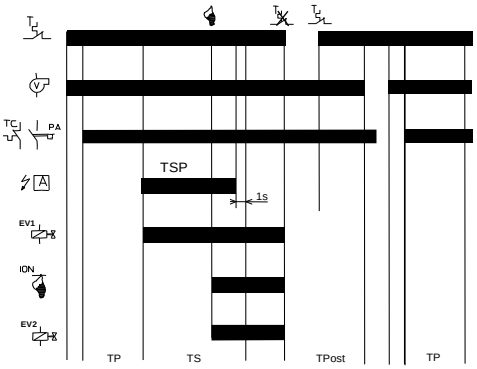

OPTION Pnn

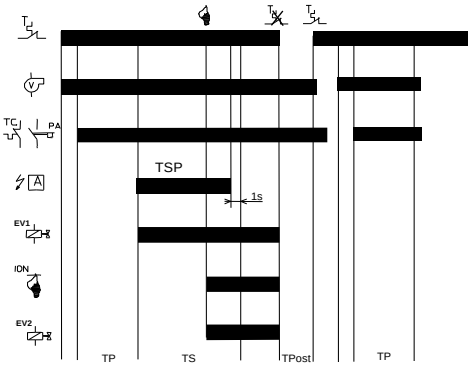

OPTION PTnn

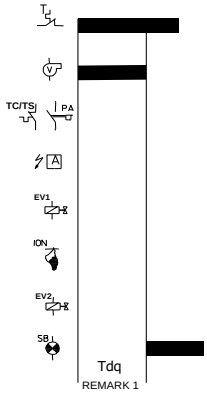

OPTIONS Q e Qnn – Failure (or insufficiency) of air flow

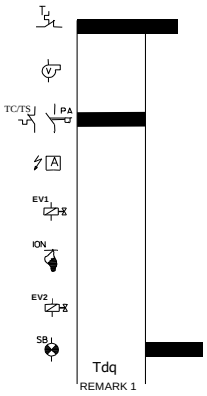

OPTIONS Q e Qnn – Failure of air flow

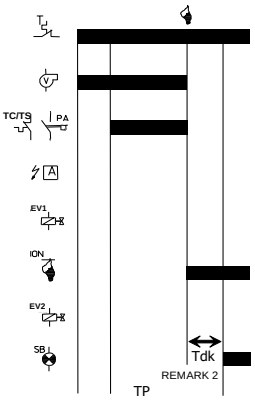

OPTIONS K e Knn

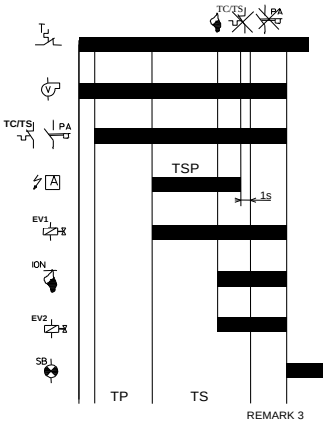

OPTIONS S e Snn

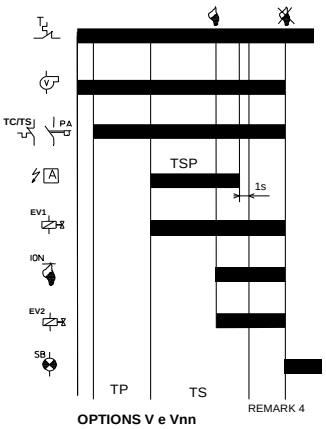

OPTIONS V e Vnn

REMARKS:

1. Lockout without (opt. Q) and with (opt. Qnn) delay Tdq.
2. Lockout without (opt. K) and with (opt. Knn) delay Tdk.
3. Lockout without (opt. S) and with (opt. Snn) “nn” number of recycles due to air pressure switch failure
4. Lockout without (opt. V) and with (opt. Vnn) “nn” recycles due to flame failure in running position.
5. With or without pre-ignition Tmj of the pilot valve (only TGRDx3 versions with opt. MJnn).
6. With or without post-ignition Tmt of the pilot valve (only TGRDx3 versions with opt. MTnn). The second safety time is equal to Tmt-Tdw.

THERMOSTAT | COMBUSTION FAN | AIR PRESSURE SWITCH | IGNITER | FLAME SIGNAL | LOCKOUT SIGNAL | PILOT SOLENOID VALVE | FIRST STAGE SOLENOID VALVE | SECOND STAGE SOLENOID VALVE | SAFETY THERMOSTAT | PREHEATER THERMOSTAT

AVAILABLE OPTIONS

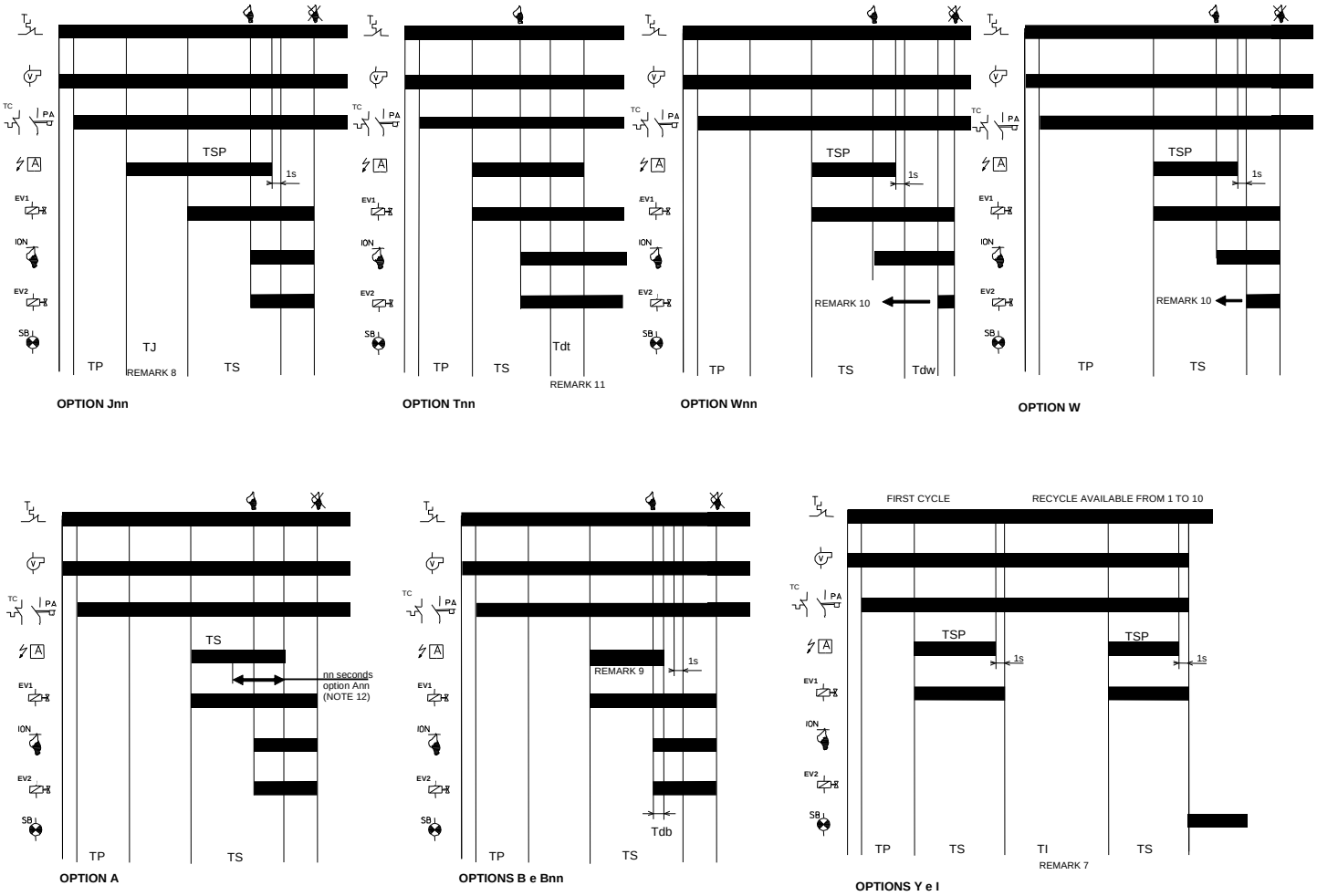

REMARKS:

7. Inter-waiting or inter-purge time available.
   As special setting, the waiting/prepurge time between each recycling attempts may be replaced by an inter-purge/inter-waiting TI, if this sequence is allowed in the final application.
8. Pre-ignition time available (opt. Jnn), igniter is supplied TJ seconds before the safety time TS.
9. Igniter is switched off in flame presence with and without delay Tdb (opt. Bnn and B).
10. Second stage is switched on at the end of safety time TS with and without delay Tdw (opt. Wnn and W).
11. Post-ignition available (opt. Tnn only oil versions), igniter is switched off with delay Tdt.
12. In case of option Ann the ignition spark is switched of nn seconds before the end of the safety time.

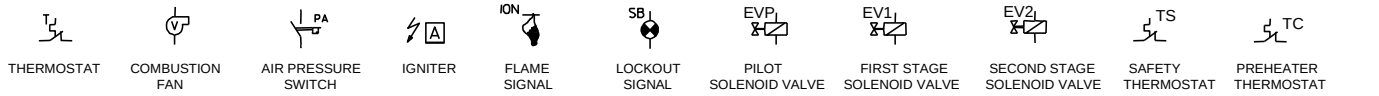

WIRING DIAGRAMS WITH AUXILIARY DEVICES

The wiring diagrams shown below are merely examples, they are not exhaustive and they must be verified in the individual case depending on the application. The wiring diagrams are of the most complete versions of the controller. It is easy to understand which parts can be present or absent according to the different options requested.

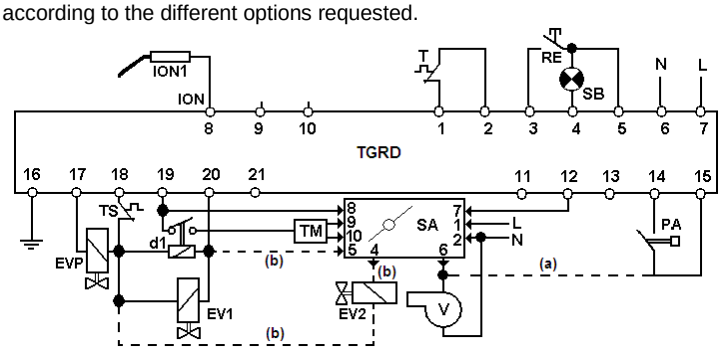

Type TGRD with option SA, MJ and MT

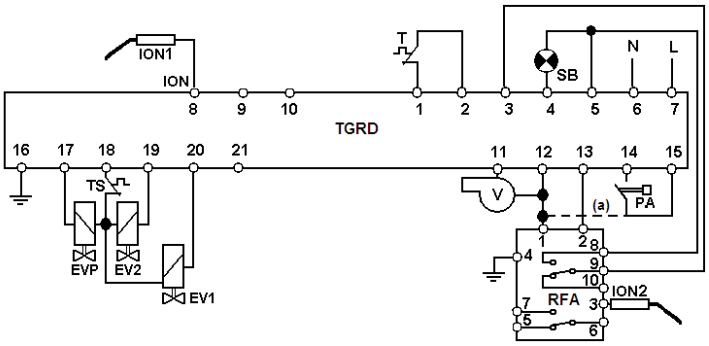

Type TGRD with option RE2

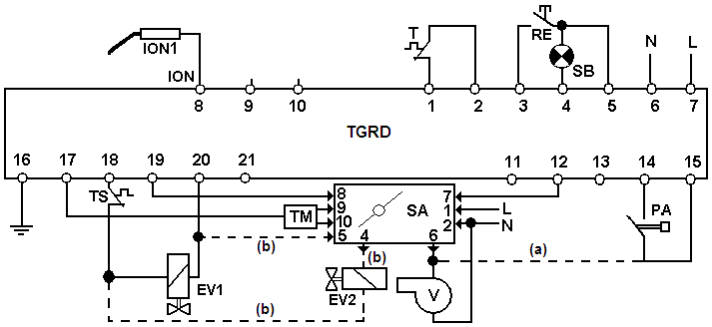

Type TGRD with option SA, MJ and MT

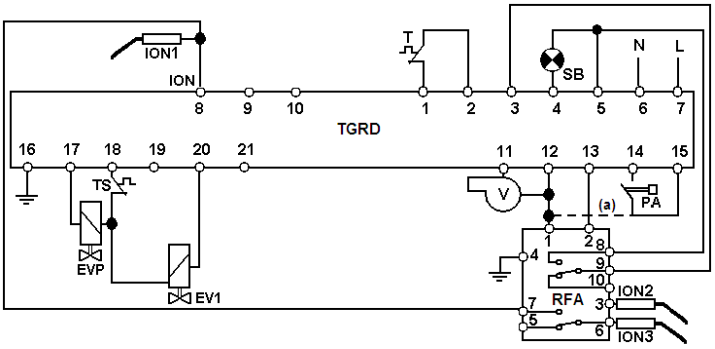

Type TGRD with option RE3

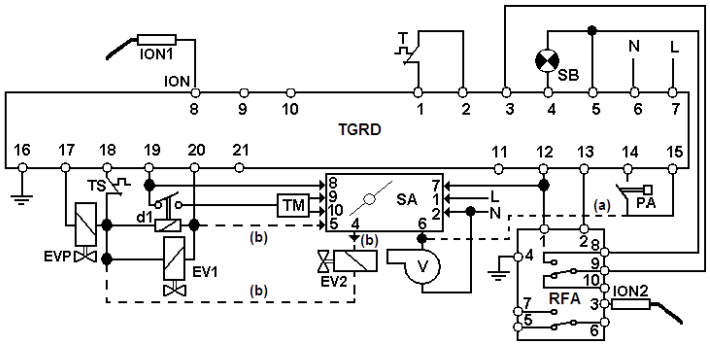

Type TGRD with option SA, MJ, MT and RE2

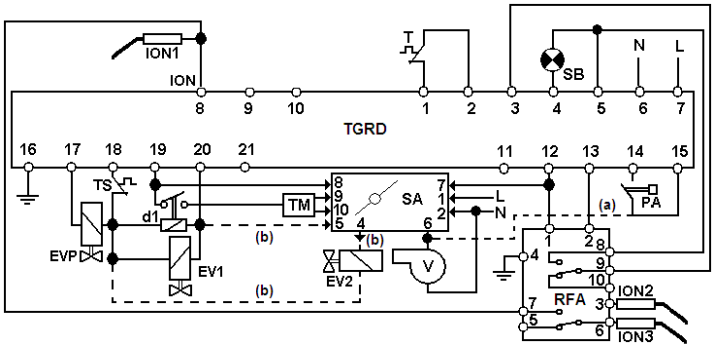

Type TGRD with option SA and RE3

Room Thermostat

Safety Thermostat

Air pressure switch

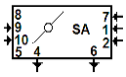

Air damper

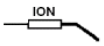

Flame sensor (Ionization)

Reset

First stage solenoid valve

Second stage solenoid valve

Pilot solenoid valve

Combustion fan

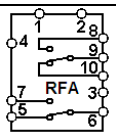

Auxiliary Flame Detector

Lockout signal

Wiring diagrams of the modulation thermostat TM.

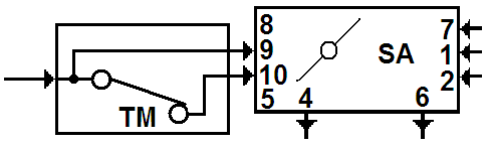

One-wire control

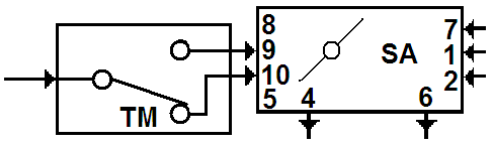

Two-wire control

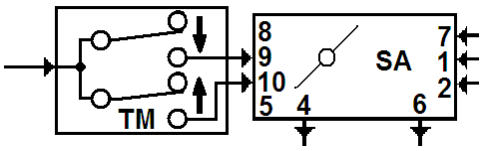

Modulation control

REMARK:

a. Connection for air pressure switch (PA) exclusion.
b. Connection to use of the second stage valve (EV2).
c. For information on "SA" actuators: See air damper Brahma type SAL ..... (technical note 13583)
d. For information on auxiliary flame detector: See flame detector Brahma type RE3 ..... (technical note 4071).
e. d1: Auxiliary relay (230Vac)

OPERATING CYCLES WITH AUXILIARY DEVICES

The wiring diagrams shown below are merely examples, they are not exhaustive and they must be verified in the individual case depending on the application. The wiring diagrams are of the most complete versions of the controller.

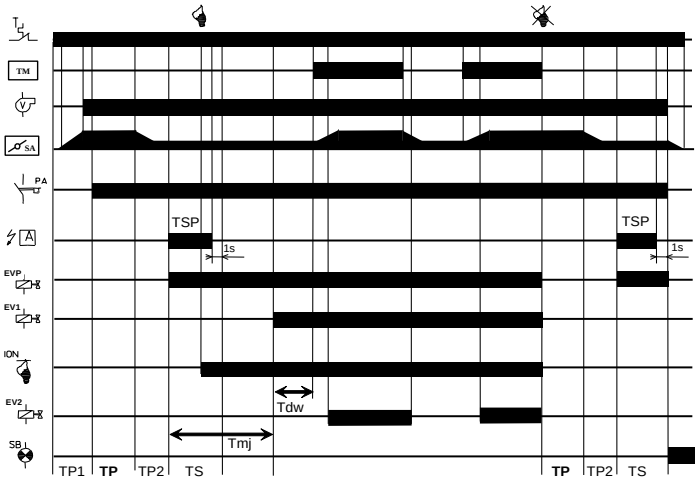

TGRD WITH OPTIONS SA MJnn Wnn

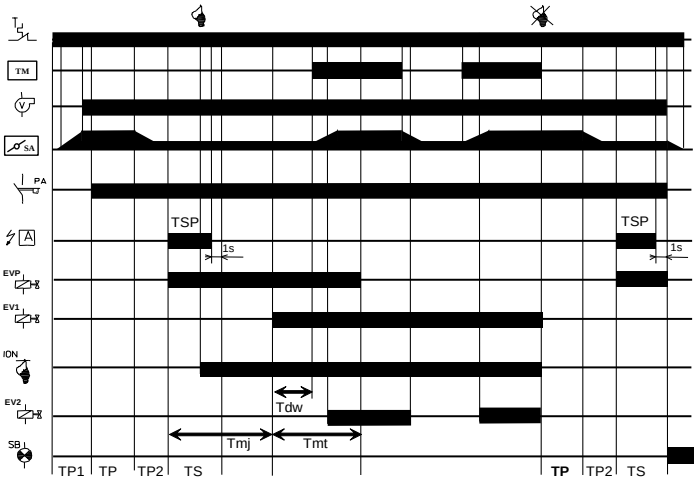

TGRD WITH OPTIONS SA MJnn MTnn Wnn

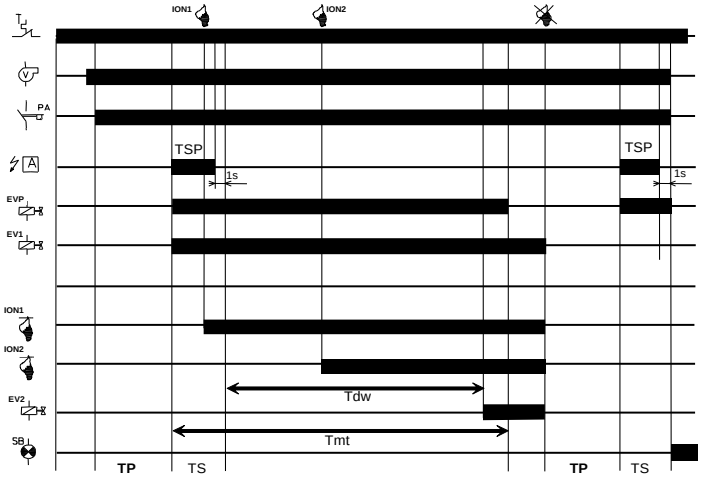

TGRD WITH OPTIONS RE2 MTnn Wnn

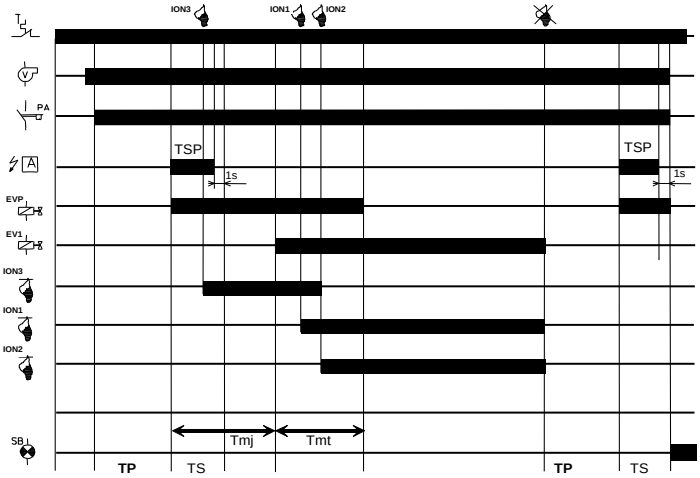

TGRD WITH OPTIONS RE3 MJnn MTnn Wnn

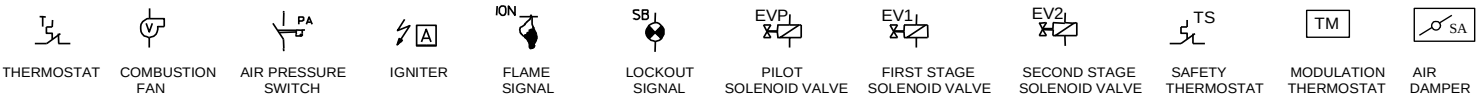

ATTENTION -> Brahma S.p.A. accepts no responsibility for any damage resulting from customer's tampering with the product.

BRAHMA S.p.A.
Via del Pontiere, 31
37045 Legnago (VR)
Tel. +39 0442 635211 - Telefax +39 0442 25683
http://www.brahma.it
E-mail : brahma@brahma.it

24 October 2022 Subject to amendments without notice