elco

# SPARE PARTS EXPLODED VIEW
## DUAL-FUEL BURNERS
Model
## CB-N8/9 GL-E

R8220125-01 - 12/12/2017



| Col | Reference | Model type | Begin | End |
|---|---|---|---|---|
| 1 | 3752891 | N 8.5800 GL-E BT3 KN | 04-2014 | 07-2015 |
| 1 | 3752895 | N 8.5800 GL-E BT3 KM | 04-2014 | 07-2015 |
| 1 | 3752899 | N 8.5800 GL-E BT3 KL | 04-2014 | 07-2015 |
| 2 | 3752892 | N 8.7100 GL-E BT3 KN | 04-2014 | 07-2015 |
| 2 | 3752896 | N 8.7100 GL-E BT3 KM | 04-2014 | 07-2015 |
| 2 | 3752900 | N 8.7100 GL-E BT3 KL | 04-2014 | 07-2015 |
| 3 | 3752893 | N 9.8700 GL-E BT3 KN | 04-2014 | 07-2015 |
| 3 | 3752897 | N 9.8700 GL-E BT3 KM | 04-2014 | 07-2015 |
| 3 | 3752901 | N 9.8700 GL-E BT3 KL | 04-2014 | 07-2015 |
| 4 | 3752894 | N 9.10400 GL-E BT3 KN | 04-2014 | 07-2015 |
| 4 | 3752898 | N 9.10400 GL-E BT3 KM | 04-2014 | 07-2015 |
| 4 | 3752902 | N 9.10400 GL-E BT3 KL | 04-2014 | 07-2015 |
| 5 | 3750515 | GT-d457-2 | 11-2013 | - |
| 6 | 3750516 | GT-d458-65 | 06-2012 | - |
| 7 | 3750517 | GT-d459-80 | 03-2013 | - |
| 8 | 3750518 | GT-d460-100 | 10-2012 | - |
| 9 | 3750537 | GT-s457-2 | 08-2012 | - |
| 10 | 3750538 | GT-s458-65 | 07-2012 | - |
| 11 | 3750539 | GT-s459-80 | 08-2013 | - |
| 12 | 3750540 | GT-s460-100 | 03-2014 | - |
| 13 | 3750541 | GT-s461-125 | 06-2014 | - |



ПРОМЭЛЕКТРОНИКА / sales@prom-elec.com

1000

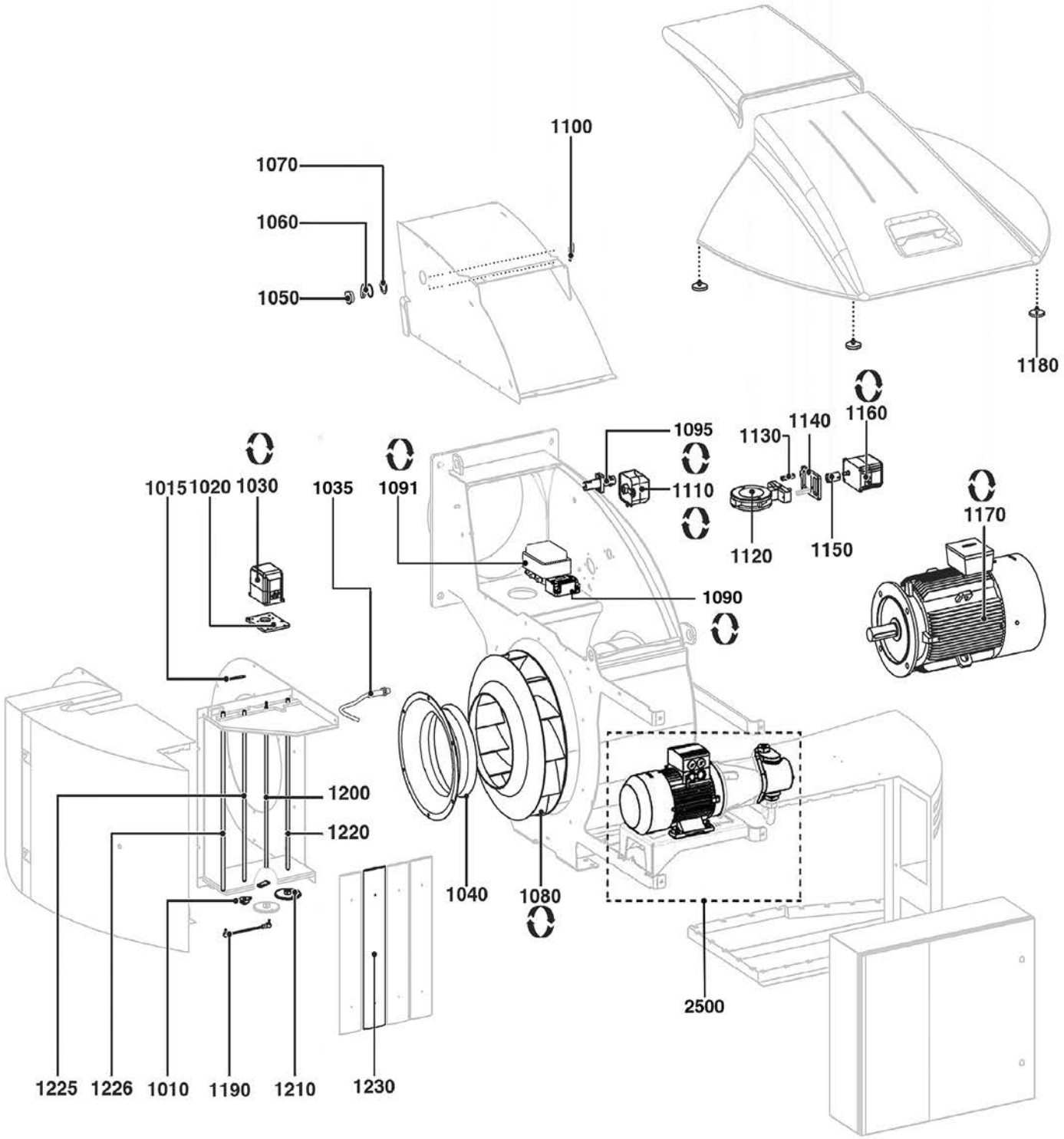
1100
1070
1060
1050
1180
1160
1140
1130
1095
1110
1120
1150
1170
1015
1020
1030
1035
1091
1090
1200
1220
1040
1080
2500
1225
1226
1010
1190
1210
1230

| | Description | Manf. Pt. N | Type | N 8.5800 GL-E BT3 (1) | N 8.7100 GL-E BT3 (2) | N 9.8700 GL-E BT3 (3) | N 9.10400 GL-E BT3 (4) | GT-d457-2 (5) | GT-d458-65 (6) | GT-d459-80 (7) | GT-d460-100 (8) | GT-s457-2 (9) | GT-s458-65 (10) | GT-s459-80 (11) | GT-s460-100 (12) | GT-s461-125 (13) | 14 | 15 | 16 | 17 | 18 | From | to |
|---|---|---|---|---|---|---|---|---|---|---|---|---|---|---|---|---|---|---|---|---|---|---|---|
| 1000 | BURNER BODY | | | | | | | | | | | | | | | | | | | | | | |
| 1010 | FLANGE 37X62X15 D12 KFL001 | 65311967 | | ● | ● | ● | ● | | | | | | | | | | | | | | | | |
| 1015 | POSITION AIR FLAP INDICATOR | 65311657 | | ● | ● | ● | ● | | | | | | | | | | | | | | | | |
| 1020 | ACTUATOR HOLDER / AIR FLAP | 65311689 | | ● | ● | ● | ● | | | | | | | | | | | | | | | | |
| 1030 | ACTUATOR STE 4,5 Q3.51/6+CABLE L3000 | 65311650 | BT3 | ● | ● | ● | ● | | | | | | | | | | | | | | | | |
| | ACTUATOR STM 40 Q15.51/8 2NR | 65311833 | Etamatic | ● | ● | ● | ● | | | | | | | | | | | | | | | | |
| 1035 | NAMUR SENSOR D14 | 1658418384 | | ● | ● | ● | ● | | | | | | | | | | | | | | | | |
| 1040 | AIR RECYCLING D288X127 | 65311673 | | ● | | | | | | | | | | | | | | | | | | | |
| | AIR RECYCLING D318X134 | 65311672 | | | ● | | | | | | | | | | | | | | | | | | |
| | AIR RECYCLING D332 X 127,5 | 65311665 | | | | ● | | | | | | | | | | | | | | | | | |
| | AIR RECYCLING D344X126 | 65311715 | | | | | ● | | | | | | | | | | | | | | | | |
| 1050 | COLORLESS SIGHT GLASS D55X21 | 1180603227 | | ● | ● | ● | ● | | | | | | | | | | | | | | | | |
| 1060 | SIGHT GLASS COVER D55X61 | 1188052260 | | ● | ● | ● | ● | | | | | | | | | | | | | | | | |
| 1070 | NUT/SIGHT GLASS M48X1,5 SW60 | 1180559591 | | ● | ● | ● | ● | | | | | | | | | | | | | | | | |
| 1080 | FAN WHEEL D533/290X83 D42 | 65311716 | | ● | | | | | | | | | | | | | | | | | | | |
| | FAN WHEEL D556/320X86 D42 | 65311670 | | | ● | | | | | | | | | | | | | | | | | | |
| | FAN WHEEL D590/334X92 D42 | 65311717 | | | | ● | | | | | | | | | | | | | | | | | |
| | FAN WHEEL D600/346X93 D48 | 65311718 | | | | | ● | | | | | | | | | | | | | | | | |
| 1090 | IGNITION TRANSFORMER EBI 1X11 230V | 65311471 | | ● | ● | ● | ● | | | | | | | | | | | | | | | | |
| 1091 | IGNITION TRANSFO.ZA 20 140E21REP.ZM20/14 | 1738733651 | | ● | ● | ● | ● | | | | | | | | | | | | | | | | |
| 1095 | PHOTOCELL D-LX100 EK-S (IR) | 13019357 | BT3 | ● | ● | ● | ● | | | | | | | | | | | | | | | | |
| | PHOTOCELL FFS08-UV1 659D31 - 5M W/O | 65312274 | Etamatic | ● | ● | ● | ● | | | | | | | | | | | | | | | | |
| 1100 | MIRROR/SIGHT GLASS | 65311472 | | ● | ● | ● | ● | | | | | | | | | | | | | | | | |
| 1110 | AIR PRESS.SWITCH LGW 50 A2P 2,5-50MB | 65311595 | | ● | ● | ● | ● | | | | | | | | | | | | | | | | |
| 1120 | GAS FLAP ASS. D100 Z05 Z | 65310688 | | ● | ● | ● | ● | | | | | | | | | | | | | | | | |
| 1130 | SPACER SW13X55 | 65311659 | | ● | ● | ● | ● | | | | | | | | | | | | | | | | |
| 1140 | ACTUATOR HOLDER / GAS FLAP | 65311658 | | ● | ● | ● | ● | | | | | | | | | | | | | | | | |
| 1150 | COUPLING GAS FLAP/ACTUATOR STE N8-N9 | 65311660 | | ● | ● | ● | ● | | | | | | | | | | | | | | | | |
| 1160 | ACTUATOR STE 4,5 Q3.51/6+CABLE L3000 | 65311650 | BT3 | ● | ● | ● | ● | | | | | | | | | | | | | | | | |
| | ACTUATOR STM 40 Q15.51/8 2NR | 65311833 | Etamatic | ● | ● | ● | ● | | | | | | | | | | | | | | | | |
| 1170 | MOTOR 11KW 400/690V D42 IE3 ELV BLACK | 65326333 | | ● | | | | | | | | | | | | | | | | | | | |
| | MOTOR 15KW 400/690V D42 IE3 ELV BLACK | 65326334 | | | ● | | | | | | | | | | | | | | | | | | |
| | MOTOR 18,5KW 400/690V D42 IE3 ELV BLACK | 65326335 | | | | ● | | | | | | | | | | | | | | | | | |
| | MOTOR 22KW 400/690V D48 IE3 ELV BLACK | 65326336 | | | | | ● | | | | | | | | | | | | | | | | |
| 1180 | MAGNET FIX BURNER COVER | 65311502 | | ● | ● | ● | ● | | | | | | | | | | | | | | | | |
| 1190 | CONNECTING ROD CS10 L200 | 65311714 | | ● | ● | ● | ● | | | | | | | | | | | | | | | | |
| 1200 | SPINDLE / AIR FLAP D12X673 D4H7 | 65311686 | | ● | ● | ● | ● | | | | | | | | | | | | | | | | |
| 1210 | COGWHEEL Z=100 M=1 BO=12MM /BORG. 6 MM | 65311701 | | ● | ● | ● | ● | | | | | | | | | | | | | | | | |
| 1220 | SPINDLE / AIR FLAP D12X670 D4H7 | 65311685 | | ● | ● | ● | ● | | | | | | | | | | | | | | | | |
| 1225 | SPINDLE / AIR FLAP D12X705 M8 + POINTER | 65311687 | | ● | ● | ● | ● | | | | | | | | | | | | | | | | |
| 1226 | SPINDLE / AIR FLAP D12X705 + POINTER | 65311688 | | ● | ● | ● | ● | | | | | | | | | | | | | | | | |
| 1230 | AIR FLAP | 65311684 | | ● | ● | ● | ● | | | | | | | | | | | | | | | | |

1500

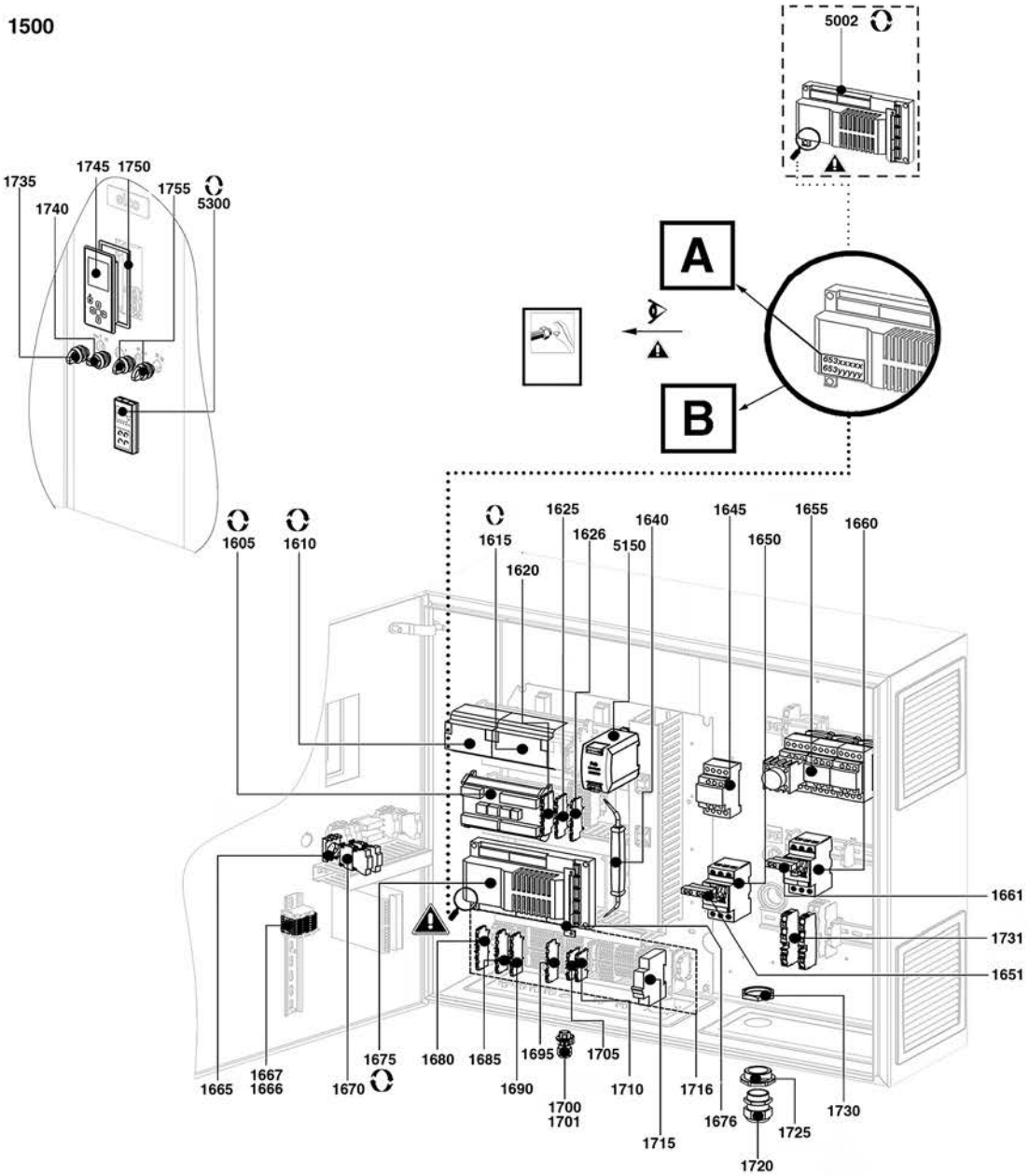
5002
A
B
1735
1740
1745
1750
1755
5300
1605
1610
1615
1620
1625
1626
5150
1640
1645
1650
1655
1660
1661
1731
1651
1730
1665
1667
1666
1670
1675
1680
1685
1690
1695
1700
1701
1705
1710
1715
1716
1676
1725
1720

5000

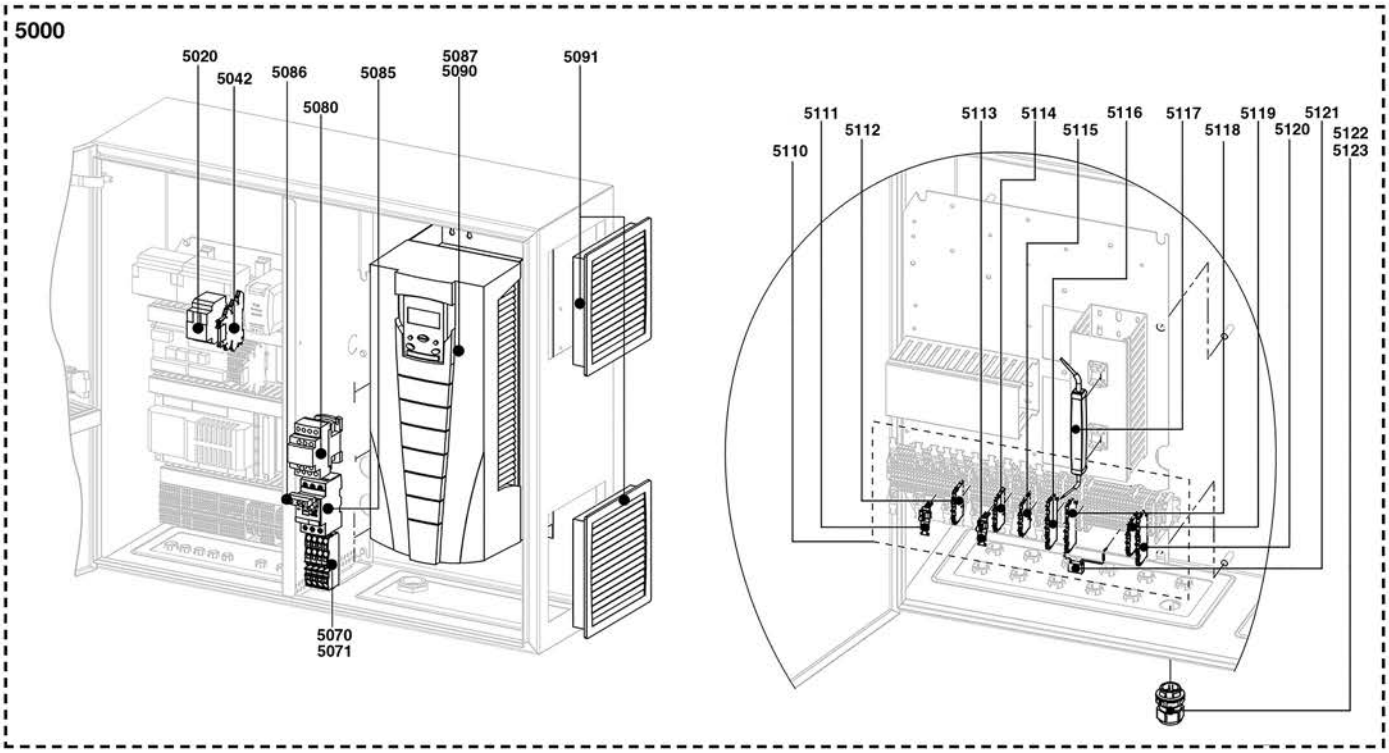
5020
5042
5086
5085
5080
5087
5090
5091
5070
5071
5110
5111
5112
5113
5114
5115
5116
5117
5118
5119
5120
5121
5122
5123

| | Description | Manf. Pt. N | Type | N 8.5800 GL-E BT3 | N 8.7100 GL-E BT3 | N 9.8700 GL-E BT3 | N 9.10400 GL-E BT3 | GT-d457-2 | GT-d458-65 | GT-d459-80 | GT-d460-100 | GT-s457-2 | GT-s458-65 | GT-s459-80 | GT-s460-100 | GT-s461-125 | | | | | | | | 31 | |
|---|---|---|---|---|---|---|---|---|---|---|---|---|---|---|---|---|---|---|---|---|---|---|---|---|---|
| | | | | 1 | 2 | 3 | 4 | 5 | 6 | 7 | 8 | 9 | 10 | 11 | 12 | 13 | 14 | 15 | 16 | 17 | 18 | From | to |
| 1500 | ELECTRIC PART | | | | | | | | | | | | | | | | | | | | | | |
| 1605 | ADAPTER BT300/DFM300 RAST5 | 65311789 | | ● | ● | ● | ● | | | | | | | | | | | | | | | | |
| 1610 | LCM100 MODULE (LSB-M 667R0500-1) | 65311790 | | ● | ● | ● | ● | | | | | | | | | | | | | | | | |
| 1615 | DFM300 MODULE (LSB-M 667R0600-1) | 65311791 | | ● | ● | ● | ● | | | | | | | | | | | | | | | | |
| 1620 | FEED-THROUGH TERMINAL (GREY) 2001-1401 | 65311449 | | ● | ● | ● | ● | | | | | | | | | | | | | | | | |
| 1625 | FEED-THROUGH TERMINAL NEUTRAL 2001-1404 | 65311447 | | ● | ● | ● | ● | | | | | | | | | | | | | | | | |
| 1626 | FEED-THROUGH TERMINAL (EARTH) 2001-1407 | 65311445 | | ● | ● | ● | ● | | | | | | | | | | | | | | | | |
| 1640 | OPERATING TOOL WAG 2009-309 | 65311446 | | ● | ● | ● | ● | | | | | | | | | | | | | | | | |
| 1645 | MOTOR CONTACTOR SCH D 3-4kW LC1D09P7 | 65311793 | | ● | ● | ● | ● | | | | | | | | | | | | | | | | |
| 1650 | CIRCUIT BREAK. MOTOR 3-4KW GV2ME14 | 65311794 | | ● | ● | ● | ● | | | | | | | | | | | | | | | | |
| 1651 | AUXILIARY SWITCH GVAE11 | 65311795 | | ● | ● | ● | ● | | | | | | | | | | | | | | | | |
| 1655 | MOTOR STARTER Y/D 11KW LC3D12AP7 | 65312015 | | ● | ● | | | | | | | | | | | | | | | | | | |
| | MOTOR STARTER Y/D 18KW LC3D18P7 | 65311796 | | | | ● | | | | | | | | | | | | | | | | | |
| | MOTOR STARTER Y/D 22KW LC3D32AP7 | 65311797 | | | | | ● | | | | | | | | | | | | | | | | |
| 1660 | CIRCUIT BREAK. MOTOR 11KW GV2ME22 | 65312018 | | ● | | | | | | | | | | | | | | | | | | | |
| | CIRCUIT BREAK. MOTOR 15KW GV2ME32 | 65311798 | | | ● | | | | | | | | | | | | | | | | | | |
| | CIRCUIT BREAK. MOTOR 18,5KW GV3P40 | 65312019 | | | | ● | | | | | | | | | | | | | | | | | |
| | CIRCUIT BREAK. MOTOR 22KW GV3P50 | 65311917 | | | | | ● | | | | | | | | | | | | | | | | |
| 1661 | AUXILIARY SWITCH GVAE11 | 65311795 | | ● | ● | ● | ● | | | | | | | | | | | | | | | | |
| 1665 | EQUIPMENT RACK, 3-TRAY M22-A | 65311919 | | ● | ● | ● | ● | | | | | | | | | | | | | | | | |
| 1666 | FEED-THROUGH TERMINAL (GREY) 2001-1201 | 65311443 | | ● | ● | ● | ● | | | | | | | | | | | | | | | | |
| 1667 | FEED-THROUGH TERMINAL (EARTH) 2001-1207 | 65311444 | | ● | ● | ● | ● | | | | | | | | | | | | | | | | |
| 1670 | DOUBLE NORMALLY CLOSE CONTACT M22-CK02 | 65311922 | | ● | ● | ● | ● | | | | | | | | | | | | | | | | |
| | DOUBLE NORMALLY OPEN CONTACT M22-CK20 | 65311924 | | ● | ● | ● | ● | | | | | | | | | | | | | | | | |
| | LED ELEMENT, WHITE M22-CLED230 | 65311920 | | ● | ● | ● | ● | | | | | | | | | | | | | | | | |
| | NORMALLY CLOSED CONTACT M22 -CK01 | 65311921 | | ● | ● | ● | ● | | | | | | | | | | | | | | | | |
| | NORMALLY OPEN CONTACT M22-CK10 | 65311923 | | ● | ● | ● | ● | | | | | | | | | | | | | | | | |
| 1675 | CONTROL UNIT BT340 GL-E | 65312454 | | ● | ● | ● | ● | | | | | | | | | | | | | | | | |
| 1676 | X30-X34 BLANK COVER 667R0001 | 65311926 | BT3 | ● | ● | ● | ● | | | | | | | | | | | | | | | | |
| 1680 | FEED-THROUGH TERMINAL (ORANGE) 2001-1402 | 65311927 | | ● | ● | ● | ● | | | | | | | | | | | | | | | | |
| 1685 | FEED-THROUGH TERMINAL (EARTH) 2001-1407 | 65311445 | | ● | ● | ● | ● | | | | | | | | | | | | | | | | |
| 1690 | FEED-THROUGH TERMINAL (GREY) 2001-1401 | 65311449 | | ● | ● | ● | ● | | | | | | | | | | | | | | | | |
| 1695 | FEED-THROUGH TERMINAL NEUTRAL 2001-1404 | 65311447 | | ● | ● | ● | ● | | | | | | | | | | | | | | | | |
| 1700 | CABLE GLAND M16 | 65311451 | | ● | ● | ● | ● | | | | | | | | | | | | | | | | |
| 1701 | CABLE GLAND M20 | 65311758 | | ● | ● | ● | ● | | | | | | | | | | | | | | | | |
| | CABLE GLAND M25 | 65311759 | | ● | ● | ● | ● | | | | | | | | | | | | | | | | |
| 1705 | FEED-THROUGH TERMINAL (GREY) 2001-1201 | 65311443 | | ● | ● | ● | ● | | | | | | | | | | | | | | | | |
| 1710 | FEED-THROUGH TERMINAL (ORANGE) 2001-1202 | 65311441 | | ● | ● | ● | ● | | | | | | | | | | | | | | | | |
| 1715 | CIRCUIT BREAKER 1P SCHNEIDER 23614 | 65311931 | | ● | ● | ● | ● | | | | | | | | | | | | | | | | |
| 1716 | TERMINAL STRIP WAGO STRG. N6-9 GL-E BT | 65311932 | | ● | ● | ● | ● | | | | | | | | | | | | | | | | |
| 1720 | CABLE GLAND CLICK M40X1,5 | 65311934 | | ● | ● | ● | ● | | | | | | | | | | | | | | | | |
| | CABLE GLAND M32X1,5 | 65311933 | | ● | ● | ● | ● | | | | | | | | | | | | | | | | |
| 1725 | REDUCER SKINDICHT KU-M M40x1,5/32X1.5 | 65311935 | | ● | ● | ● | ● | | | | | | | | | | | | | | | | |
| 1730 | LOCK NUT M40X1,5 | 65311936 | | ● | ● | ● | ● | | | | | | | | | | | | | | | | |
| 1731 | FEED-THROUGH TERMINAL (GREY) 2006-1301 | 65312106 | | ● | | | | | | | | | | | | | | | | | | | |
| | FEED-THROUGH TERMINAL (GREY) 2010-1301 | 65311937 | | | ● | | | | | | | | | | | | | | | | | | |
| | FEED-THROUGH TERMINAL (GREY) 2016-1301 | 65311938 | | | | ● | ● | | | | | | | | | | | | | | | | |
| 1732 | FEED-THROUGH TERMINAL (EARTH) | 65312040 | | | ● | | | | | | | | | | | | | | | | | | |
| | FEED-THROUGH TERMINAL (EARTH) 2006-1307 | 65312107 | | ● | | | | | | | | | | | | | | | | | | | |
| | FEED-THROUGH TERMINAL (EARTH) 2016-1307 | 65311939 | | | | ● | ● | | | | | | | | | | | | | | | | |
| 1735 | ILLUMINAT. SELECT. BUTTON, 3-STEP,LOCK. | 65311436 | | ● | ● | ● | ● | | | | | | | | | | | | | | | | |
| 1740 | ILLUMINAT. SELECT. BUTTON, 3-STEP,LOCK. | 65311437 | | ● | ● | ● | ● | | | | | | | | | | | | | | | | |
| 1745 | DISPLAY FOR CONTROL UNIT BT3XX | 65326869 | | ● | ● | ● | ● | | | | | | | | | | | | | | | | |
| 1750 | GASKET/DISPLAY 152/140X80/70X2 | 65311364 | | ● | ● | ● | ● | | | | | | | | | | | | | | | | |
| 1755 | ILLUMINAT. SELECT. BUTTON, 2-STEP,LOCK. | 65311438 | | ● | ● | ● | ● | | | | | | | | | | | | | | | | |
| 5000 | ACCESSORY | | | | | | | | | | | | | | | | | | | | | | |
| 5002 | CONTR. UNIT BT340 CUSTOMIZED SETTING | 65312450 | | ● | ● | ● | ● | | | | | | | | | | | | | | | | |
| | CONTROL UNIT BT340 BASIC SETTING | 65312447 | | ● | ● | ● | ● | | | | | | | | | | | | | | | | |
| | CONTROL UNIT BT340 GL-EF3+FRQ.CTRL | 65312455 | | ● | ● | ● | ● | | | | | | | | | | | | | | | | |
| 5020 | VSM100 MODULE (LSB-M 667R0200-1) | 65311918 | FQC | ● | ● | ● | ● | | | | | | | | | | | | | | | | |
| 5042 | RELAY FIN 38.61.8.240.5060 KLL 1W FZ | 65311940 | FQC | ● | ● | ● | ● | | | | | | | | | | | | | | | | |
| 5070 | FEED-THROUGH TERMINAL (GREY) 2010-1301 | 65311937 | FQC | ● | ● | | | | | | | | | | | | | | | | | | |
| | FEED-THROUGH TERMINAL (GREY) 2016-1301 | 65311938 | FQC | | | ● | ● | | | | | | | | | | | | | | | | |
| 5071 | FEED-THROUGH TERMINAL (EARTH) 2016-1307 | 65311939 | FQC | ● | ● | ● | ● | | | | | | | | | | | | | | | | |
| 5080 | MOTOR CONTACTOR SCH D 3-4kW LC1D09P7 | 65311793 | FQC | ● | ● | ● | ● | | | | | | | | | | | | | | | | |
| 5085 | CIRCUIT BREAK. MOTOR 3-4KW GV2ME14 | 65311794 | FQC | ● | ● | ● | ● | | | | | | | | | | | | | | | | |
| 5086 | AUXILIARY SWITCH GVAE11 | 65311795 | FQC | ● | ● | ● | ● | | | | | | | | | | | | | | | | |

1500

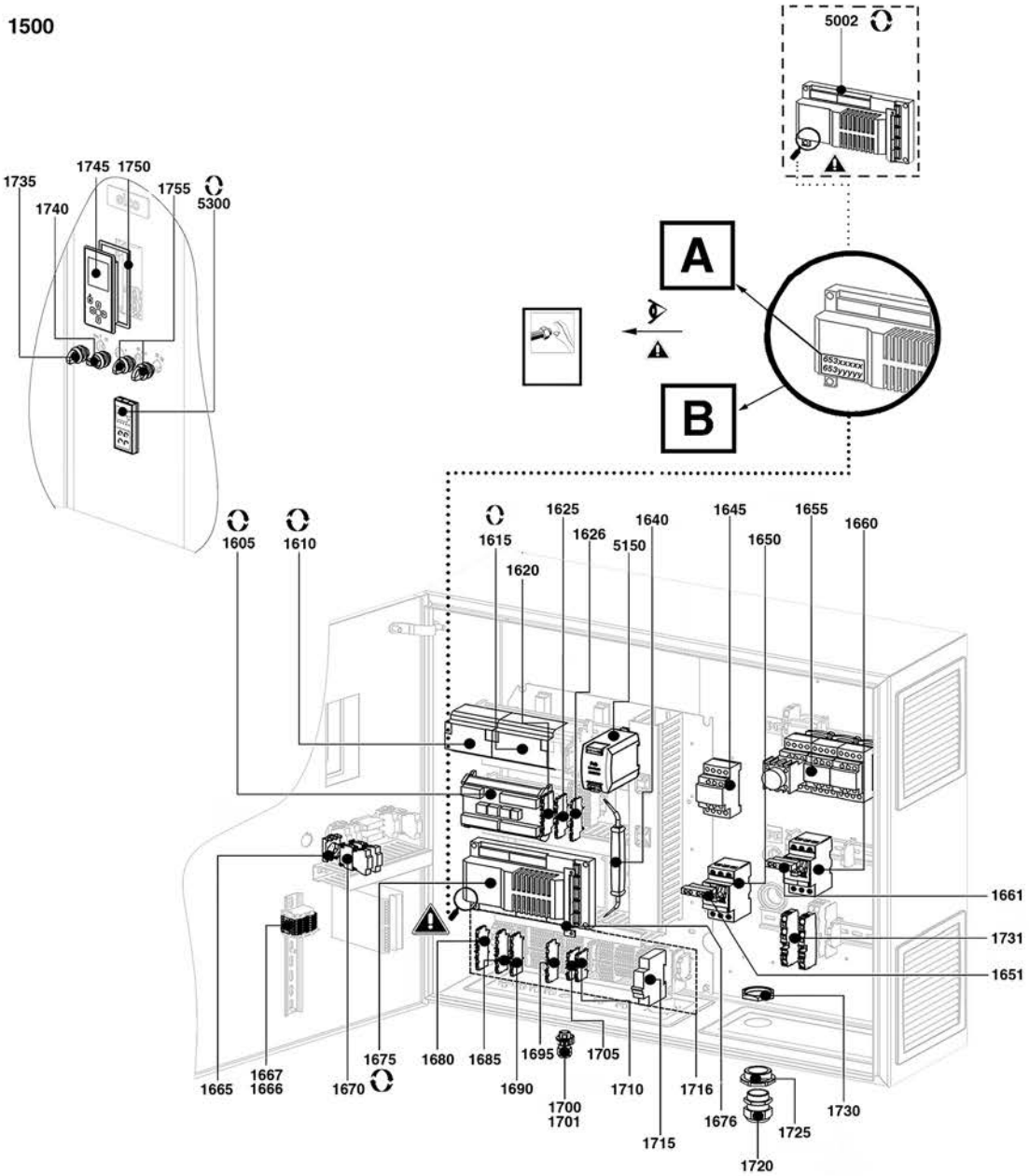
5002
A
B
1735
1740
1745
1750
1755
5300
1605
1610
1615
1620
1625
1626
5150
1640
1645
1650
1655
1660
1661
1731
1651
1665
1667
1666
1670
1675
1680
1685
1690
1695
1700
1701
1705
1710
1715
1716
1676
1720
1725
1730

5000

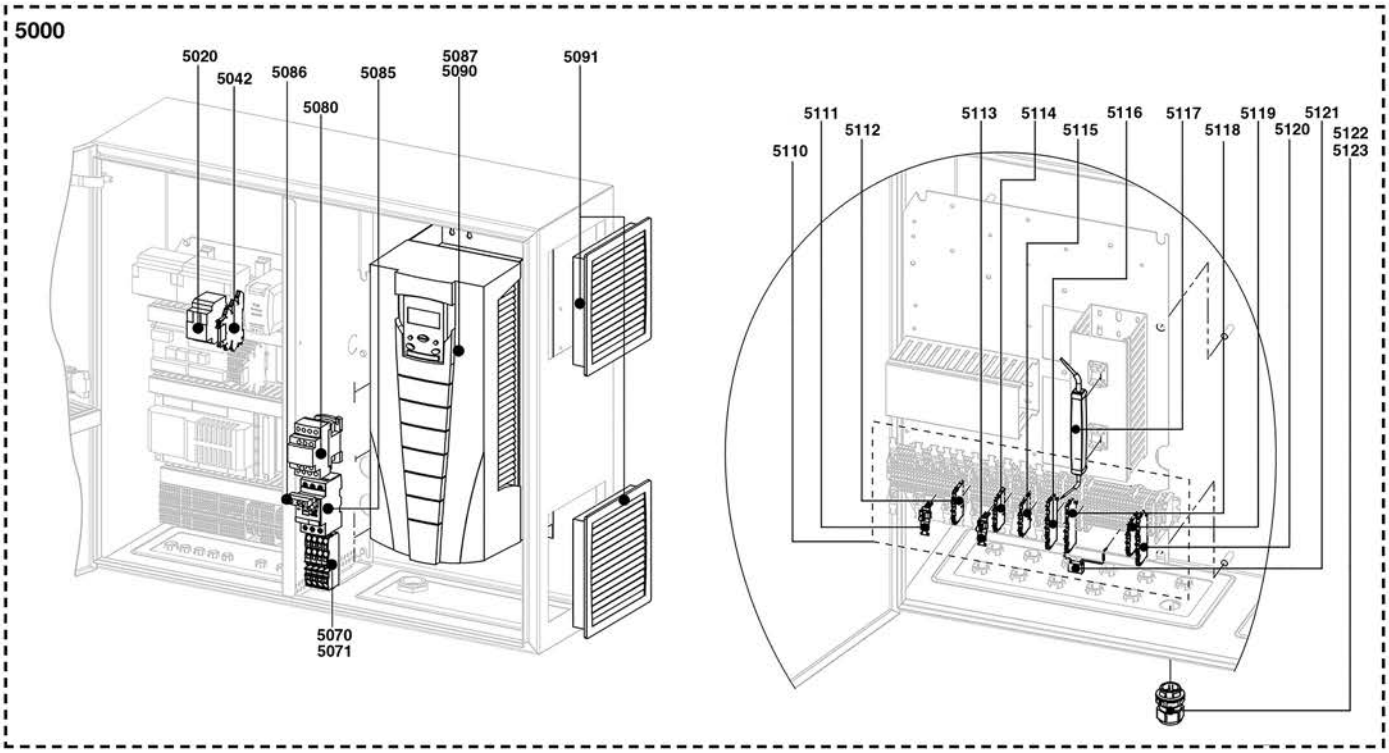
5020
5042
5086
5080
5085
5087
5090
5091
5070
5071
5110
5111
5112
5113
5114
5115
5116
5117
5118
5119
5120
5121
5122
5123

| | Description | Manf. Pt. N | Type | N 8.5800 GL-E BT3 (1) | N 8.7100 GL-E BT3 (2) | N 9.8700 GL-E BT3 (3) | N 9.10400 GL-E BT3 (4) | GT-d457-2 (5) | GT-d458-65 (6) | GT-d459-80 (7) | GT-d460-100 (8) | GT-s457-2 (9) | GT-s458-65 (10) | GT-s459-80 (11) | GT-s460-100 (12) | GT-s461-125 (13) | 14 | 15 | 16 | 17 | 18 | From | to |
|---|---|---|---|---|---|---|---|---|---|---|---|---|---|---|---|---|---|---|---|---|---|---|---|
| 5087 | FREQUENCY INVERTER ACH550 - 11kW | 65312014 | FQC | ● | | | | | | | | | | | | | | | | | | | |
| | SPEED DRIVE ACH550 15KW | 65311941 | FQC | | ● | | | | | | | | | | | | | | | | | | |
| | SPEED DRIVE ACH550 18,5KW | 65312021 | FQC | | | ● | | | | | | | | | | | | | | | | | |
| | SPEED DRIVE ACH550 22KW | 65311942 | FQC | | | | ● | | | | | | | | | | | | | | | | |
| 5090 | FAN FREQUENCY INVERTER | 65311943 | FQC | ● | ● | ● | ● | | | | | | | | | | | | | | | | |
| 5091 | FILTER AERAT. 177X177 EFA 200R5/ELDON | 65311944 | FQC | ● | ● | ● | ● | | | | | | | | | | | | | | | | |
| 5110 | TERMINAL STRIP WAGO STRG.N6-9 GL-E/F3 TB | 65311439 | Etamatic | ● | ● | ● | ● | | | | | | | | | | | | | | | | |
| 5111 | CONNECTOR EMV CARRIER 3-6 MM | 65311440 | Etamatic | ● | ● | ● | ● | | | | | | | | | | | | | | | | |
| 5112 | FEED-THROUGH TERMINAL (ORANGE) 2001-1202 | 65311441 | Etamatic | ● | ● | ● | ● | | | | | | | | | | | | | | | | |
| 5113 | CONNECTOR EMV CARRIER 6-8 MM | 65311442 | Etamatic | ● | ● | ● | ● | | | | | | | | | | | | | | | | |
| 5114 | FEED-THROUGH TERMINAL (GREY) 2001-1201 | 65311443 | Etamatic | ● | ● | ● | ● | | | | | | | | | | | | | | | | |
| 5115 | FEED-THROUGH TERMINAL (EARTH) 2001-1207 | 65311444 | Etamatic | ● | ● | ● | ● | | | | | | | | | | | | | | | | |
| 5116 | FEED-THROUGH TERMINAL (EARTH) 2001-1407 | 65311445 | Etamatic | ● | ● | ● | ● | | | | | | | | | | | | | | | | |
| 5117 | OPERATING TOOL WAG 2009-309 | 65311446 | Etamatic | ● | ● | ● | ● | | | | | | | | | | | | | | | | |
| 5118 | FEED-THROUGH TERMINAL NEUTRAL 2001-1404 | 65311447 | Etamatic | ● | ● | ● | ● | | | | | | | | | | | | | | | | |
| 5119 | FEED-THROUGH TERMINAL NEUTRAL 2001-1204 | 65311448 | Etamatic | ● | ● | ● | ● | | | | | | | | | | | | | | | | |
| 5120 | FEED-THROUGH TERMINAL (GREY) 2001-1401 | 65311449 | Etamatic | ● | ● | ● | ● | | | | | | | | | | | | | | | | |
| 5121 | TEST LOAD ETAMATIC 663R1199 | 65311450 | Etamatic | ● | ● | ● | ● | | | | | | | | | | | | | | | | |
| 5122 | CABLE GLAND M16 | 65311451 | Etamatic | ● | ● | ● | ● | | | | | | | | | | | | | | | | |
| | CABLE GLAND M20 | 65311758 | Etamatic | ● | ● | ● | ● | | | | | | | | | | | | | | | | |
| | CABLE GLAND M25 | 65311759 | Etamatic | ● | ● | ● | ● | | | | | | | | | | | | | | | | |
| 5123 | CLIC TOOL M16 | 65311786 | Etamatic | ● | ● | ● | ● | | | | | | | | | | | | | | | | |
| | CLIC TOOL M20 | 65311787 | Etamatic | ● | ● | ● | ● | | | | | | | | | | | | | | | | |
| | CLIC TOOL M25 | 65311788 | Etamatic | ● | ● | ● | ● | | | | | | | | | | | | | | | | |
| 5150 | POWER SUPPLY ML30.100-24V DC | 1758811789 | | ● | ● | ● | ● | | | | | | | | | | | | | | | | |
| 5300 | CONTROLLER RWF 55.50A9 | 65114033 | | ● | ● | ● | ● | | | | | | | | | | | | | | | | |

2000

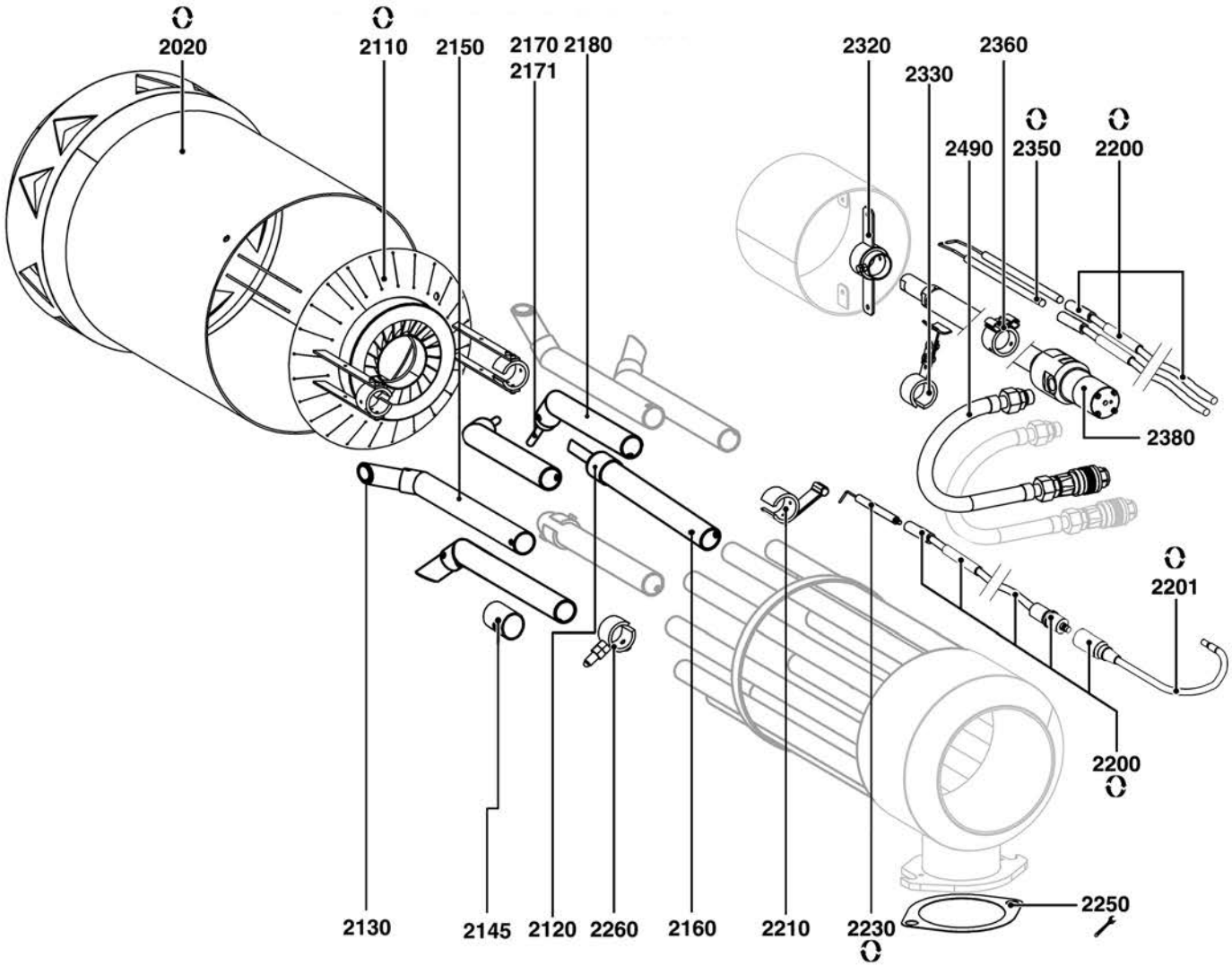
2020
2110
2150
2170
2171
2180
2320
2330
2360
2490
2350
2200
2380
2201
2200
2250
2130
2145
2120
2260
2160
2210
2230

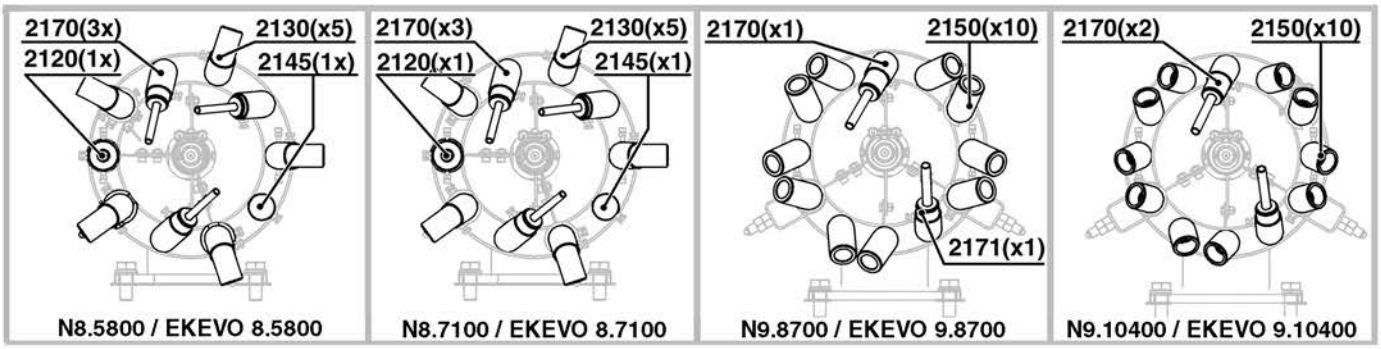
2170(3x)
2130(x5)
2120(1x)
2145(1x)
N8.5800 / EKEVO 8.5800
2170(x3)
2130(x5)
2120(x1)
2145(x1)
N8.7100 / EKEVO 8.7100
2170(x1)
2150(x10)
2171(x1)
N9.8700 / EKEVO 9.8700
2170(x2)
2150(x10)
N9.10400 / EKEVO 9.10400

| | Description | Manf. Pt. N | Type | N 8.5800 GL-E BT3 | N 8.7100 GL-E BT3 | N 9.8700 GL-E BT3 | N 9.10400 GL-E BT3 | GT-d457-2 | GT-d458-65 | GT-d459-80 | GT-d460-100 | GT-s457-2 | GT-s458-65 | GT-s459-80 | GT-s460-100 | GT-s461-125 | | | | | | | 31 | |
|---|---|---|---|---|---|---|---|---|---|---|---|---|---|---|---|---|---|---|---|---|---|---|---|---|
| | | | | 1 | 2 | 3 | 4 | 5 | 6 | 7 | 8 | 9 | 10 | 11 | 12 | 13 | 14 | 15 | 16 | 17 | 18 | From | | to |
| 2000 | COMBUSTION HEAD | | | | | | | | | | | | | | | | | | | | | | | |
| 2020 | FLAME TUBE D369/400/320 L617 | 65312078 | KN | ● | | | | | | | | | | | | | | | | | | | | |
| | FLAME TUBE D369/400/320 L757 | 65312079 | KM | ● | | | | | | | | | | | | | | | | | | | | |
| | FLAME TUBE D369/400/320 L897 | 65312080 | KL | ● | | | | | | | | | | | | | | | | | | | | |
| | FLAME TUBE D369/415/351 L638 | 65312081 | KN | | ● | | | | | | | | | | | | | | | | | | | |
| | FLAME TUBE D369/415/351 L778 | 65312082 | KM | | ● | | | | | | | | | | | | | | | | | | | |
| | FLAME TUBE D369/415/351 L918 | 65312083 | KL | | ● | | | | | | | | | | | | | | | | | | | |
| | FLAME TUBE D431,5/373 L408 | 65312084 | KN | | | ● | ● | | | | | | | | | | | | | | | | | |
| | FLAME TUBE D431,5/373 L558 | 65312085 | KM | | | ● | ● | | | | | | | | | | | | | | | | | |
| | FLAME TUBE D431,5/373 L708 | 65312086 | KL | | | ● | ● | | | | | | | | | | | | | | | | | |
| 2110 | BAFFLE PLATE D300/74X67 20SL | 65312088 | | | | | ● | | | | | | | | | | | | | | | | | |
| | BAFFLE PLATE D320/74X67 20SL | 65312087 | | ● | ● | | | | | | | | | | | | | | | | | | | |
| | BAFFLE PLATE D330/74 BEF.230MM | 65311881 | | | | ● | | | | | | | | | | | | | | | | | | |
| 2120 | STABILIZATION GAS NOZZLE D 13 | 65312089 | | ● | ● | | | | | | | | | | | | | | | | | | | |
| 2130 | ANGULAR GAS NOZZLE D=20 | 65312090 | | ● | | | | | | | | | | | | | | | | | | | | |
| | ANGULAR GAS NOZZLE D=22 | 65312091 | | | ● | | | | | | | | | | | | | | | | | | | |
| 2145 | GASTUBE SHUTTER D30 | 65312094 | | ● | ● | | | | | | | | | | | | | | | | | | | |
| 2150 | ANGULAR GAS NOZZLE D35/24X56/245 | 65312092 | | | | ● | | | | | | | | | | | | | | | | | | |
| | ANGULAR GAS NOZZLE D35/27X35/245 | 65312093 | | | | | ● | | | | | | | | | | | | | | | | | |
| | GASTUBE D35X2,2X300 | 65312095 | | ● | | | | | | | | | | | | | | | | | | | | |
| | GASTUBE D35X2,2X360 GRL. | 65311710 | | | ● | | | | | | | | | | | | | | | | | | | |
| 2160 | GASTUBE D35X2,2X257 ADJUSTABLE | 65311882 | | ● | | | | | | | | | | | | | | | | | | | | |
| | GASTUBE D35X2,2X360 | 65311702 | | | ● | | | | | | | | | | | | | | | | | | | |
| 2170 | GAS NOZZLE D30X2/10X1,5X103 | 65312096 | | ● | ● | | | | | | | | | | | | | | | | | | | |
| | GAS NOZZLE D30X2/D12X1,5 | 65311683 | | | | ● | ● | | | | | | | | | | | | | | | | | |
| 2171 | GAS NOZZLE D30X2/D12X1 L73 | 65312013 | | | | ● | | | | | | | | | | | | | | | | | | |
| 2180 | GAS TUBE D35X2.2X45GR. | 65311712 | | | ● | | | | | | | | | | | | | | | | | | | |
| | GASTUBE D35X2,2X100/35 | 65312098 | | | | ● | ● | | | | | | | | | | | | | | | | | |
| | GASTUBE D35X2,2X220/50 | 65312097 | | ● | | | | | | | | | | | | | | | | | | | | |
| 2200 | IGNITION CABLE D6,4/D6,4 L1500 AP | 1728777751 | | ● | ● | ● | ● | | | | | | | | | | | | | | | | | |
| 2201 | IGNITION CABLE D4/SAT 72750 | 65310724 | | ● | ● | ● | ● | | | | | | | | | | | | | | | | | |
| 2210 | IGNITION ELECTRODE HOLDER | 65311662 | | ● | ● | ● | ● | | | | | | | | | | | | | | | | | |
| 2230 | IGNITION ELEC.D11X100D6,4D2,5X150 27/90° | 65313846 | | | | ● | | | | | | | | | | | | | | | | | | |
| | IGNITION ELECT. D11X100 D6,4 D2,5X59 45° | 65311690 | | ● | ● | | ● | | | | | | | | | | | | | | | | | |
| 2250 | GASKET/OVAL FLANGE 210X160X2 D116 | 65311713 | | ● | ● | ● | ● | | | | | | | | | | | | | | | | | |
| 2260 | CENTERING PILLAR N8/EKEVO8 | 65312022 | | ● | ● | | | | | | | | | | | | | | | | | | | |
| | CENTERING PILLAR N9/EKEVO9 | 65312023 | | | | ● | ● | | | | | | | | | | | | | | | | | |
| 2320 | CENTRING NOZZLE ROD DM35 | 65312099 | | ● | ● | ● | ● | | | | | | | | | | | | | | | | | |
| 2330 | SUPPORT FOR CENTERING PILLAR | 65312100 | | ● | ● | ● | ● | | | | | | | | | | | | | | | | | |
| 2350 | IGNITION ELEC.D11X220 D3X150 20° L150 D4 | 1728703262 | | ● | ● | ● | ● | | | | | | | | | | | | | | | | | |
| 2360 | CENTERING RING | 65312141 | | ● | ● | ● | ● | | | | | | | | | | | | | | | | | |
| 2380 | NOZZLE ROD D35 L560 | 65312102 | KN | | | ● | ● | | | | | | | | | | | | | | | | | |
| | NOZZLE ROD RDG 1250D35 L760 | 65311817 | KM | | | ● | | | | | | | | | | | | | | | | | | |
| | NOZZLE ROD RDG 1250D35 L760 | 65311817 | KN | ● | ● | | | | | | | | | | | | | | | | | | | |
| | NOZZLE ROD RDG 1250D35 L860 | 65310280 | KL | | | ● | ● | | | | | | | | | | | | | | | | | |
| | NOZZLE ROD RDG 1250D35 L860 | 65310280 | KM | ● | ● | | | | | | | | | | | | | | | | | | | |
| | NOZZLE ROD RDG 1250D35 L960 | 65311818 | KL | ● | ● | | | | | | | | | | | | | | | | | | | |
| | NOZZLE ROD RDG1250 L660 | 65311884 | KM | | | | ● | | | | | | | | | | | | | | | | | |
| 2490 | OIL HOSE DN16 L500 | 65311435 | | ● | ● | ● | ● | | | | | | | | | | | | | | | | | |

2500

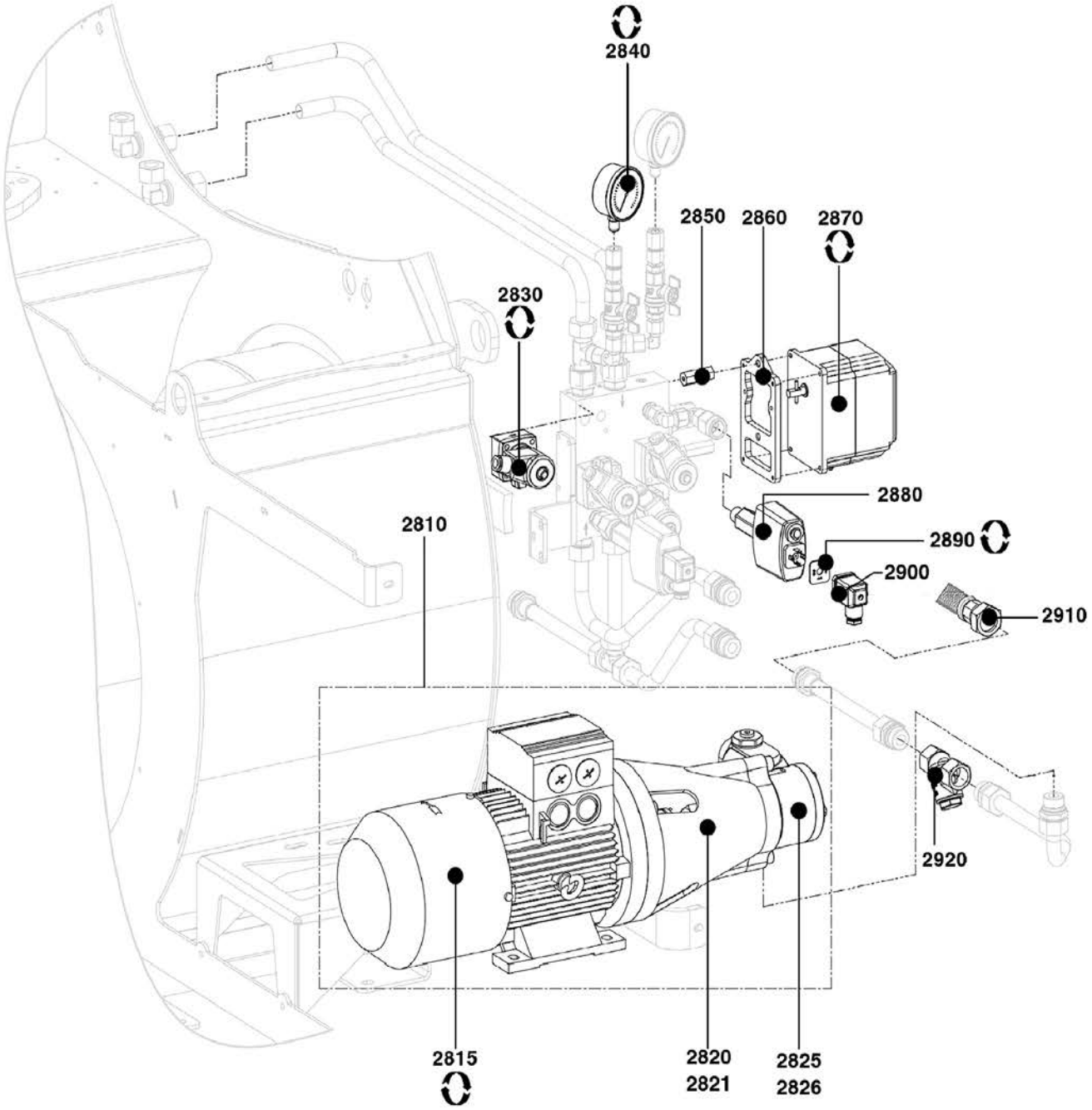
2840
2850
2860
2870
2830
2880
2810
2890
2900
2910
2920
2815
2820
2821
2825
2826

| | Description | Manf. Pt. N | Type | N 8.5800 GL-E BT3 | N 8.7100 GL-E BT3 | N 9.8700 GL-E BT3 | N 9.10400 GL-E BT3 | GT-d457-2 | GT-d458-65 | GT-d459-80 | GT-d460-100 | GT-s457-2 | GT-s458-65 | GT-s459-80 | GT-s460-100 | GT-s461-125 | | | | | | 31 | |
|---|---|---|---|---|---|---|---|---|---|---|---|---|---|---|---|---|---|---|---|---|---|---|---|
| | | | | 1 | 2 | 3 | 4 | 5 | 6 | 7 | 8 | 9 | 10 | 11 | 12 | 13 | 14 | 15 | 16 | 17 | 18 | From | to |
| 2500 | HYDRAULICS | | | | | | | | | | | | | | | | | | | | | | |
| 2810 | PUMP INSTALL. SMG1630-I-4-SO-IE3 30BAR | 65311406 | | ● | ● | ● | | | | | | | | | | | | | | | | | |
| | PUMP INSTALL. SMG1631-I-4-SO-IE3 30BAR | 65312103 | | | | | ● | | | | | | | | | | | | | | | | |
| 2815 | MOTOR 3KW 230/400V D28 1400 TR/MN GMP | 65311407 | | ● | ● | ● | | | | | | | | | | | | | | | | | |
| | MOTOR 4KW400/690V D28 1400TR/MN GMP IE3 | 65312104 | | | | | ● | | | | | | | | | | | | | | | | |
| 2820 | COUPLING D24/28 PW DM18/MW | 1238795399 | | ● | ● | ● | | | | | | | | | | | | | | | | | |
| | COUPLING D28/38 PW DM22/MW | 1238795402 | | | | | ● | | | | | | | | | | | | | | | | |
| 2821 | COUPLING D24/28 GMP | 1238795424 | | ● | ● | ● | | | | | | | | | | | | | | | | | |
| | COUPLING D28/38 | 1238795435 | | | | | ● | | | | | | | | | | | | | | | | |
| 2825 | OIL PUMP VBHRG 2200L/H | 65312105 | | | | | ● | | | | | | | | | | | | | | | | |
| | OIL PUMP VBHRG I 410 SO 1700L/H | 65311410 | | ● | ● | ● | | | | | | | | | | | | | | | | | |
| 2826 | GASKET SET / PUMP D18 | 13019380 | | ● | ● | ● | | | | | | | | | | | | | | | | | |
| | GASKET SET D22 | 5788707026 | | | | | ● | | | | | | | | | | | | | | | | |
| 2830 | SOLEN. VALVE LUC 121F2523 P8 PG11 19W | 13022667 | RL(Reflow) | ● | ● | ● | ● | | | | | | | | | | | | | | | | |
| | SOLEN. VALVE LUC 321F2523 P8 PG11 19W | 13022666 | VL(Preflow) | ● | ● | ● | ● | | | | | | | | | | | | | | | | |
| 2840 | MANOMETER GLYCERIN D 63 0-40 BAR G1/4 | 65311572 | | ● | ● | ● | ● | | | | | | | | | | | | | | | | |
| 2850 | SPACER M6/M8X42 SW15 | 65311831 | | ● | ● | ● | ● | | | | | | | | | | | | | | | | |
| 2860 | PLATE ACTUATOR STE | 65311412 | | ● | ● | ● | ● | | | | | | | | | | | | | | | | |
| 2870 | ACTUATOR STE 4,5 Q3.51/6+CABLE L3000 | 65311650 | BT3 | ● | ● | ● | ● | | | | | | | | | | | | | | | | |
| | ACTUATOR STM 40 Q15.51/8 2NR | 65311833 | Etamatic | ● | ● | ● | ● | | | | | | | | | | | | | | | | |
| 2880 | OIL PRESS.SWITCH DSB 158 F931 3-25BAR | 65312206 | | ● | ● | ● | ● | | | | | | | | | | | | | | | | |
| 2890 | GASKET GDM 3-21 | 65311616 | | ● | ● | ● | ● | | | | | | | | | | | | | | | | |
| 2900 | CONNECTOR GDMW 30-11 DF | 65311615 | | ● | ● | ● | ● | | | | | | | | | | | | | | | | |
| 2910 | OIL HOSE M30X1,5 DN20 L=1500 | 13019342 | | ● | ● | | | | | | | | | | | | | | | | | | |
| | OIL HOSE M38X1,5 DN25 L=1500 | 1488436955 | | | | ● | ● | | | | | | | | | | | | | | | | |
| 2920 | OIL FILTER RP3/4 PN16 | 65311578 | | ● | ● | ● | | | | | | | | | | | | | | | | | |
| | T-UNION R1Z (STRAINER) OVE | 65311414 | | | | | ● | | | | | | | | | | | | | | | | |

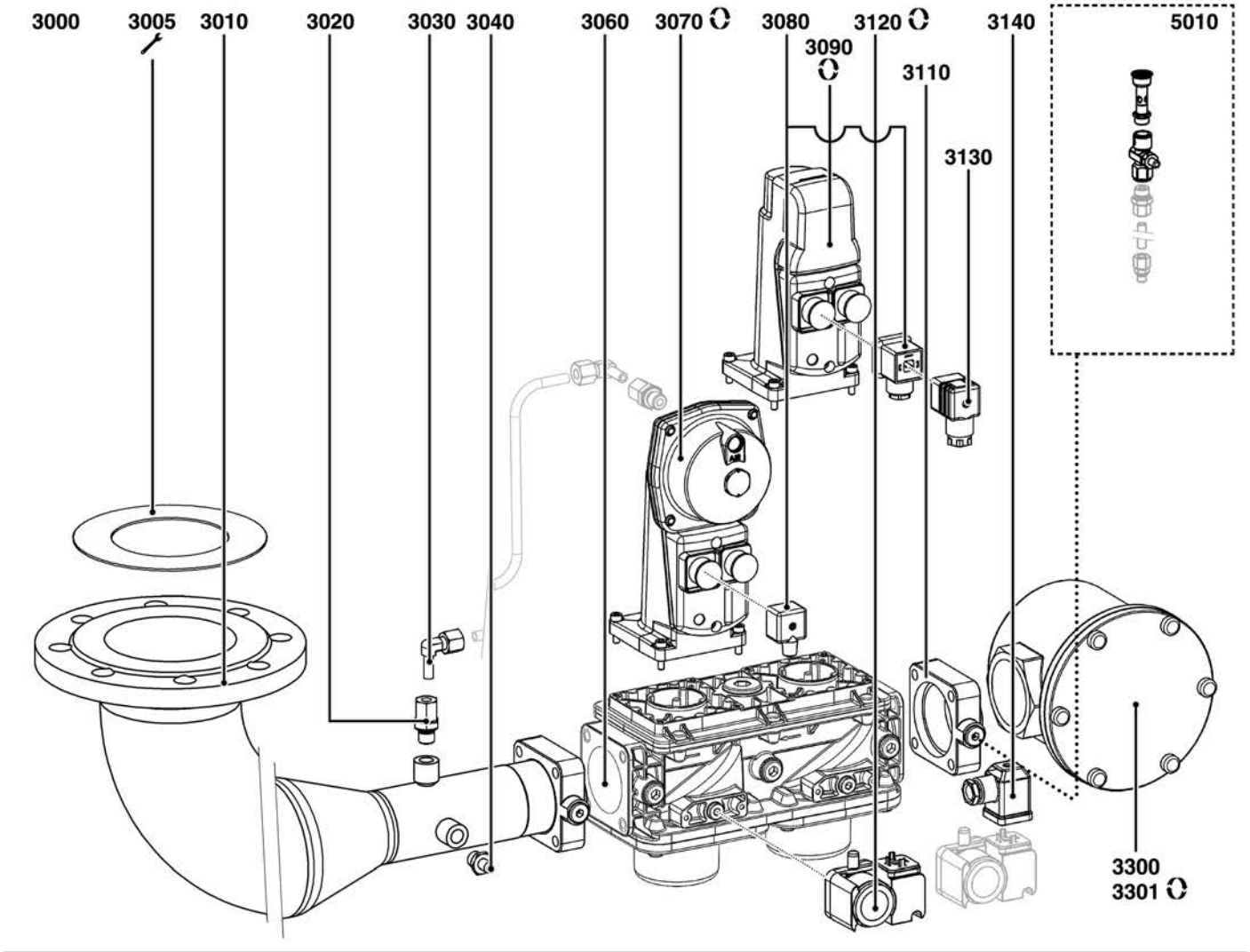
3000
3005
3010
3020
3030
3040
3060
3070
3080
3120
3140
5010
3090
3110
3130
3300
3301

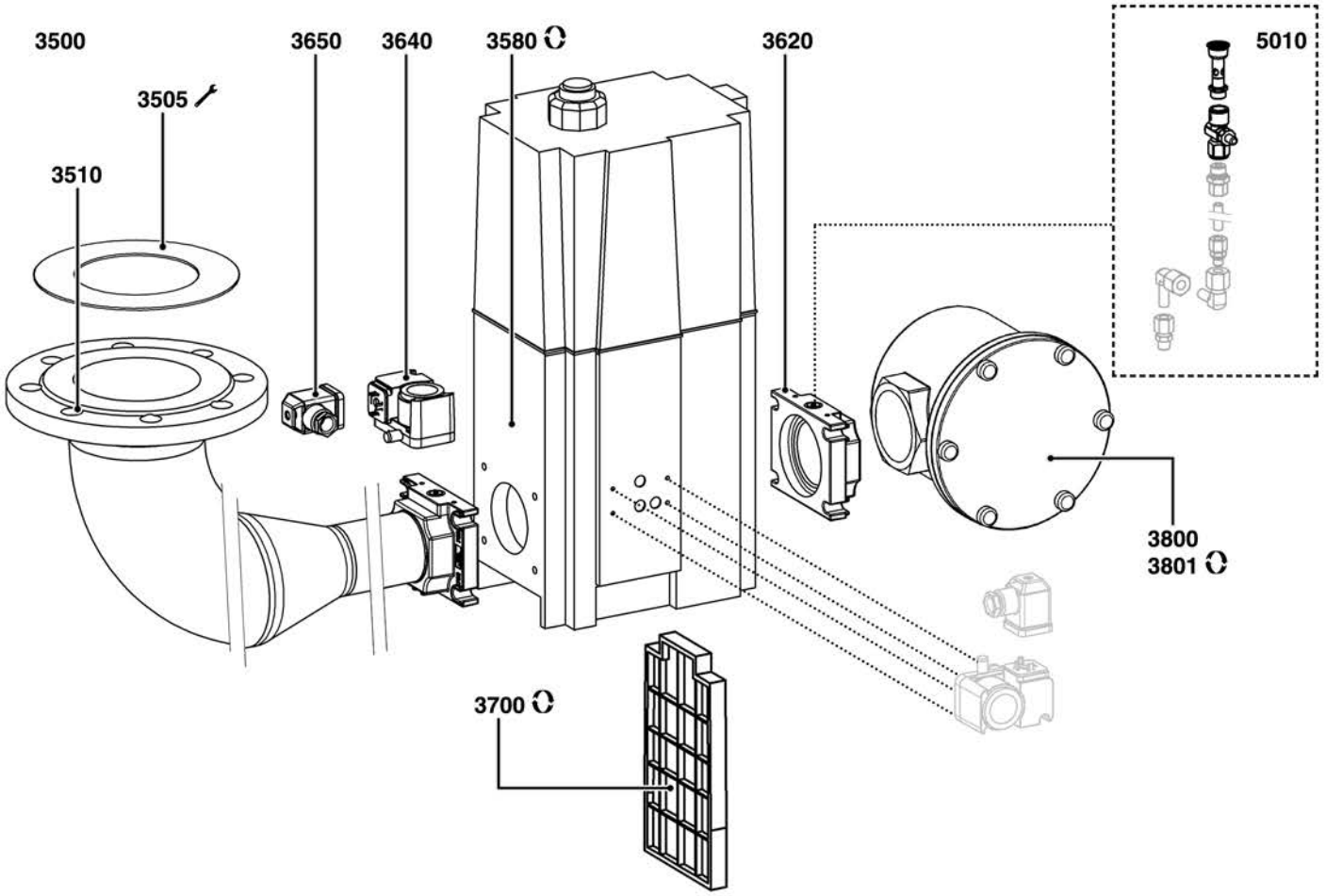
3500
3650
3640
3580
3620
5010
3505
3510
3800
3801
3700

R8220163

| | Description | Manf. Pt. N | Type | N 8.5800 GL-E BT3 | N 8.7100 GL-E BT3 | N 9.8700 GL-E BT3 | N 9.10400 GL-E BT3 | GT-d457-2 | GT-d458-65 | GT-d459-80 | GT-d460-100 | GT-s457-2 | GT-s458-65 | GT-s459-80 | GT-s460-100 | GT-s461-125 | | | | | | | | |
|---|---|---|---|---|---|---|---|---|---|---|---|---|---|---|---|---|---|---|---|---|---|---|---|---|
| | | | | 1 | 2 | 3 | 4 | 5 | 6 | 7 | 8 | 9 | 10 | 11 | 12 | 13 | 14 | 15 | 16 | 17 | 18 | From | | to |
| 3000 | GAS TRAIN | | | | | | | | | | | | | | | | | | | | | | | |
| 3005 | GASKET/GASTRAIN D162/115X2 DN100 | 65311613 | | | | | | | | | | ● | | | | | | | | | | | | |
| 3010 | GAS CONNECTION TUBE DN100 / R2 STD. | 65311678 | | | | | | | | | | ● | | | | | | | | | | | | |
| 3020 | STRAIGHT UNION P-GEV 8LR-WD-VI | 65311606 | | | | | | | | | | ● | | | | | | | | | | | | |
| 3030 | ANGLED UNION P-EWV 8-L | 65311604 | | | | | | | | | | ● | | | | | | | | | | | | |
| 3040 | PRESSURE TAP R1/4Z+GASKET | 65311579 | | | | | | | | | | ● | | | | | | | | | | | | |
| 3060 | GAS VALVE VGD20 5011 RP2" | 65311581 | | | | | | | | | | ● | | | | | | | | | | | | |
| 3070 | GAS ACTUATOR SKP25.003E2 W.O.END SWITCH | 65107100 | | | | | | | | | | ● | | | | | | | | | | | | |
| 3080 | CABLE CONNECT AGA 62 PLUG DIN L270 | 65311585 | | | | | | | | | | ● | | | | | | | | | | | | |
| 3090 | GAS ACTUATOR SKP15.000E2 W/O END SWITCH | 1478836180 | | | | | | | | | | ● | | | | | | | | | | | | |
| 3110 | FLANGE AGF10.50 RP2 | 65311377 | | | | | | | | | | ● | | | | | | | | | | | | |
| 3120 | GAS PRESS.SWITCH GW 150 A6 5-150MB DIN | 65323022 | OPTION | | | | | | | | | ● | | | | | | | | | | | | |
| | GAS PRESS.SWITCH GW 500 A5 30-500MB | 65310852 | 30-500mb | | | | | | | | | ● | | | | | | | | | | | | |
| 3130 | FEMALE CONNECTOR AGA64 | 65311586 | | | | | | | | | | ● | | | | | | | | | | | | |
| 3140 | CONNECTOR GDMW 30-11 DF | 65311615 | | | | | | | | | | ● | | | | | | | | | | | | |
| 3300 | GAS FILTER GF80M-1616-A-1 RP2 1BAR | 65311459 | | | | | | | | | | ● | | | | | | | | | | | | |
| 3301 | STRAINER RP 1 1/2+O-RING | 65311361 | | | | | | | | | | ● | | | | | | | | | | | | |
| 3500 | GAS TRAIN | | | | | | | | | | | | | | | | | | | | | | | |
| 3505 | GASKET/GASTRAIN D162/115X2 DN100 | 65311613 | | | | | | ● | | | | | | | | | | | | | | | | |
| 3510 | GAS CONNECTION TUBE DN100 / RP2 | 65311973 | | | | | | ● | | | | | | | | | | | | | | | | |
| 3580 | GAS VALVE MBC1200 SE S82 RP2'' 5-80 MB | 65311840 | | | | | | ● | | | | | | | | | | | | | | | | |
| 3620 | FLANGE MBC700/1200 RP2 | 65313022 | | | | | | ● | | | | | | | | | | | | | | | | |
| 3640 | GAS PRESS.SWITCH GW 150 A5 30-150MB | 65311598 | OPTION | | | | | ● | | | | | | | | | | | | | | | | |
| | GAS PRESS.SWITCH GW 500 A5 30-500MB | 65310852 | 30-500mb | | | | | ● | | | | | | | | | | | | | | | | |
| 3650 | CONNECTOR GDMW 30-11 DF | 65311615 | | | | | | ● | | | | | | | | | | | | | | | | |
| 3700 | STRAINER MBC 1200 | 13022417 | | | | | | ● | | | | | | | | | | | | | | | | |
| 3800 | GAS FILTER GF80M-1616-A-1 RP2 1BAR | 65311459 | | | | | | ● | | | | | | | | | | | | | | | | |
| 3801 | STRAINER RP 1 1/2+O-RING | 65311361 | | | | | | ● | | | | | | | | | | | | | | | | |
| 5000 | ACCESSORY | | | | | | | | | | | | | | | | | | | | | | | |
| 5010 | TRIAL BURNER WITH PUSH-BUTTON PB2 | 65311362 | | | | | | ● | | | | ● | | | | | | | | | | | | |

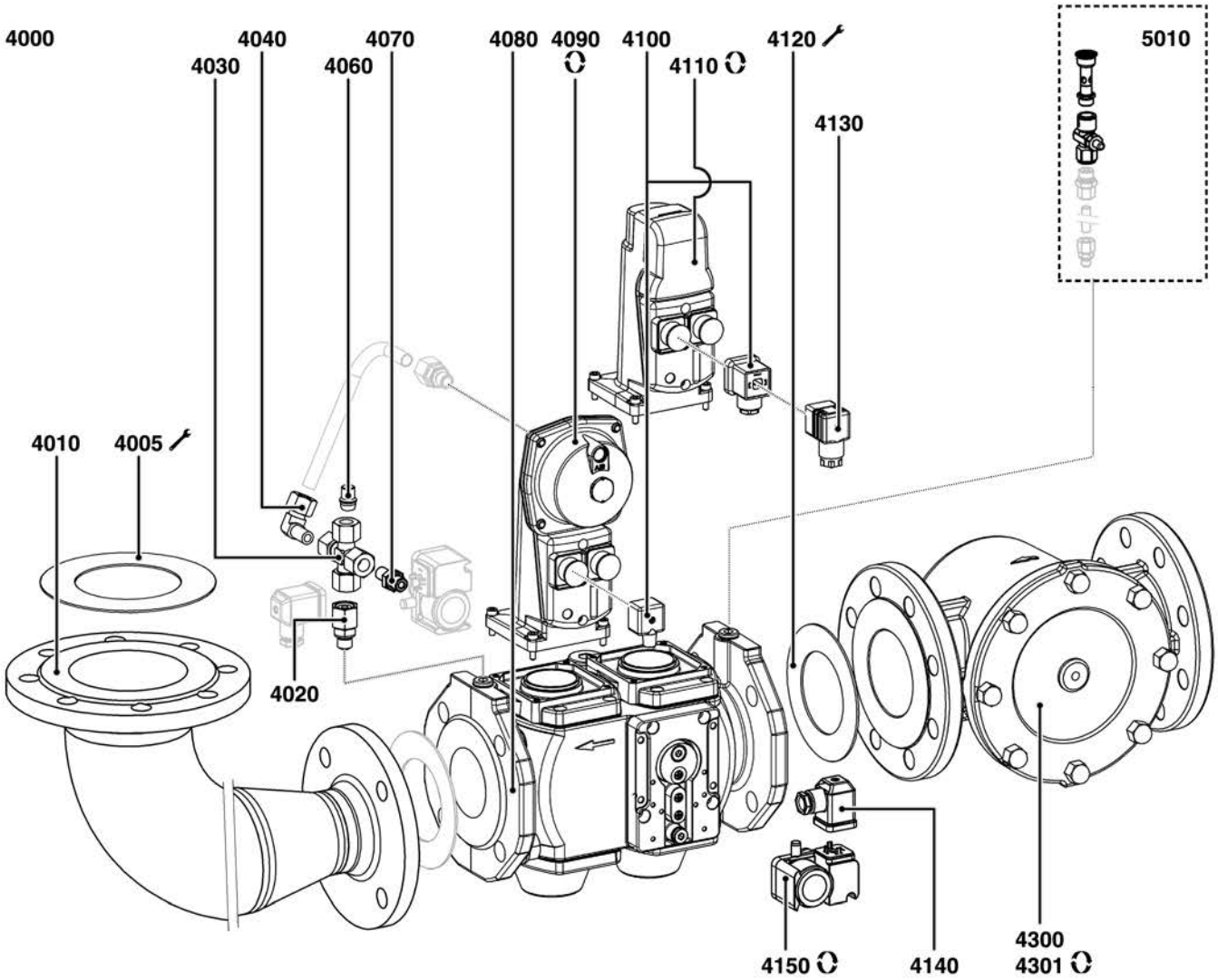
4000
4040
4070
4080
4090
4100
4120
5010
4030
4060
4110
4130
4010
4005
4020
4150
4140
4300
4301

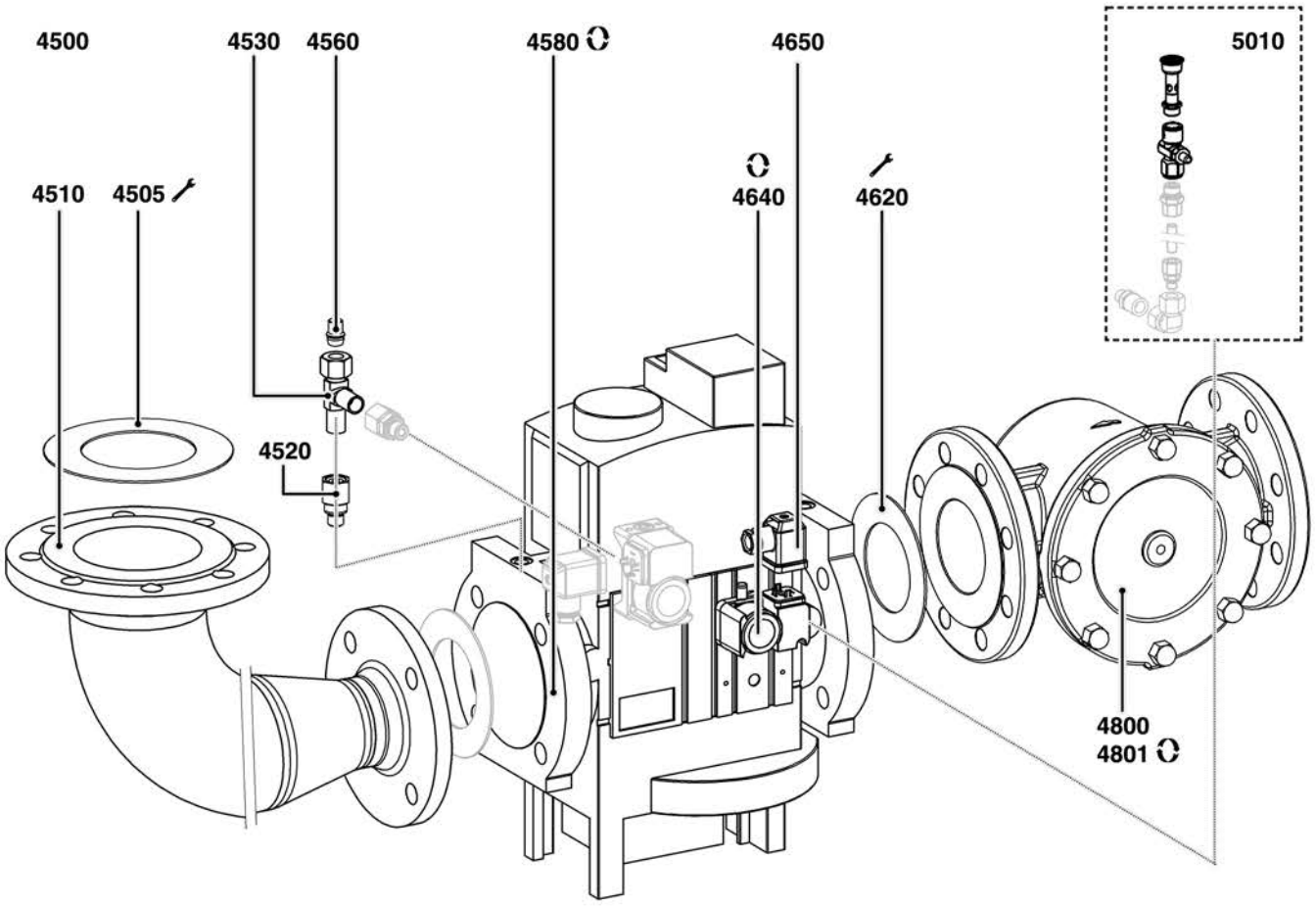
4500
4530
4560
4580
4650
5010
4510
4505
4640
4620
4520
4800
4801

R8220164

| | Description | Manf. Pt. N | Type | N 8.5800 GL-E BT3 | N 8.7100 GL-E BT3 | N 9.8700 GL-E BT3 | N 9.10400 GL-E BT3 | GT-d457-2 | GT-d458-65 | GT-d459-80 | GT-d460-100 | GT-s457-2 | GT-s458-65 | GT-s459-80 | GT-s460-100 | GT-s461-125 | | | | | | From | to |
|---|---|---|---|---|---|---|---|---|---|---|---|---|---|---|---|---|---|---|---|---|---|---|---|
| | | | | 1 | 2 | 3 | 4 | 5 | 6 | 7 | 8 | 9 | 10 | 11 | 12 | 13 | 14 | 15 | 16 | 17 | 18 | | |
| 4000 | GAS TRAIN | | | | | | | | | | | | | | | | | | | | | | |
| 4005 | GASKET/GASTRAIN D162/115X2 DN100 | 65311613 | | | | | | | | | | | ● | ● | ● | ● | | | | | | | |
| 4010 | GAS CONNECTION TUBE DN100/DN100 | 65311676 | | | | | | | | | | | | | ● | | | | | | | | |
| | GAS CONNECTION TUBE DN100/DN125 | 65311677 | | | | | | | | | | | | | | ● | | | | | | | |
| | GAS CONNECTION TUBE DN100/DN65 | 65311674 | | | | | | | | | | | ● | | | | | | | | | | |
| | GAS CONNECTION TUBE DN100/DN80 | 65311675 | | | | | | | | | | | | ● | | | | | | | | | |
| 4020 | STRAIGHT UNION P-EGES 12L/R 1/4WD | 65311601 | | | | | | | | | | | ● | ● | ● | ● | | | | | | | |
| 4030 | UNION ELBOW P-EWV12L-SV | 65311608 | | | | | | | | | | | ● | ● | ● | ● | | | | | | | |
| 4040 | UNION P-KV12L | 65311605 | | | | | | | | | | | ● | ● | ● | ● | | | | | | | |
| 4060 | STOPPER D15/10X21 VSD 12L/S O.M.MB | 65311607 | | | | | | | | | | | ● | ● | ● | ● | | | | | | | |
| 4070 | STRAIGHT UNION P-EGES 12L/R 1/4WD | 65311601 | | | | | | | | | | | ● | ● | ● | ● | | | | | | | |
| 4080 | GAS VALVE VGD40 065 DN65 | 65323661 | | | | | | | | | | | ● | | | | | | | | | | |
| | GAS VALVE VGD40 080 DN80 | 65311583 | | | | | | | | | | | | ● | | | | | | | | | |
| | GAS VALVE VGD40 100 DN100 | 65311590 | | | | | | | | | | | | | ● | | | | | | | | |
| | GAS VALVE VGD40 125 DN125 | 65311453 | | | | | | | | | | | | | | ● | | | | | | | |
| 4090 | GAS ACTUATOR SKP25.003E2 W.O.END SWITCH | 65107100 | | | | | | | | | | | ● | ● | ● | ● | | | | | | | |
| 4100 | CABLE CONNECT AGA 62 PLUG DIN L270 | 65311585 | | | | | | | | | | | ● | ● | ● | ● | | | | | | | |
| 4110 | GAS ACTUATOR SKP15.000E2 W/O END SWITCH | 1478836180 | | | | | | | | | | | ● | ● | ● | ● | | | | | | | |
| 4120 | GASKET/GASTRAIN D127/77X2 DN65 | 65311611 | | | | | | | | | | | ● | | | | | | | | | | |
| | GASKET/GASTRAIN D142/90X2 DN80 | 65311612 | | | | | | | | | | | | ● | | | | | | | | | |
| | GASKET/GASTRAIN D162/115X2 DN100 | 65311613 | | | | | | | | | | | | | ● | | | | | | | | |
| | GASKET/GASTRAIN D192/141X2 DN125 | 65311614 | | | | | | | | | | | | | | ● | | | | | | | |
| 4130 | FEMALE CONNECTOR AGA64 | 65311586 | | | | | | | | | | | ● | ● | ● | ● | | | | | | | |
| 4140 | CONNECTOR GDMW 30-11 DF | 65311615 | | | | | | | | | | | ● | ● | ● | ● | | | | | | | |
| 4150 | GAS PRESS.SWITCH GW 150 A6 5-150MB DIN | 65323022 | OPTION | | | | | | | | | | ● | ● | ● | ● | | | | | | | |
| | GAS PRESS.SWITCH GW 500 A5 30-500MB | 65310852 | 30-500mb | | | | | | | | | | ● | ● | ● | ● | | | | | | | |
| 4300 | GAS FILTER GF100MF-3232-A-1 DN100 1BAR | 65311462 | | | | | | | | | | | | | ● | | | | | | | | |
| | GAS FILTER GF125MF-4040-A-1 DN125 1BAR | 65311463 | | | | | | | | | | | | | | ● | | | | | | | |
| | GAS FILTER GF65MF-2020-A-1 DN65 1BAR | 65311460 | | | | | | | | | | | ● | | | | | | | | | | |
| | GAS FILTER GF80MF-2424-A-1 DN80 1BAR | 65311461 | | | | | | | | | | | | ● | | | | | | | | | |
| 4301 | STRAINER GF 100 MF | 65311889 | | | | | | | | | | | | | ● | | | | | | | | |
| | STRAINER GF 125 MF | 65311890 | | | | | | | | | | | | | | ● | | | | | | | |
| | STRAINER GF 65 MF | 65311723 | | | | | | | | | | | ● | | | | | | | | | | |
| | STRAINER GF 80 MF | 65311888 | | | | | | | | | | | | ● | | | | | | | | | |
| 4500 | GAS TRAIN | | | | | | | | | | | | | | | | | | | | | | |
| 4505 | GASKET/GASTRAIN D162/115X2 DN100 | 65311613 | | | | | | | ● | ● | ● | | | | | | | | | | | | |
| 4510 | GAS CONNECTION TUBE DN100/DN100 | 65311676 | | | | | | | | | ● | | | | | | | | | | | | |
| | GAS CONNECTION TUBE DN100/DN65 | 65311674 | | | | | | | ● | | | | | | | | | | | | | | |
| | GAS CONNECTION TUBE DN100/DN80 | 65311675 | | | | | | | | ● | | | | | | | | | | | | | |
| 4520 | STRAIGHT UNION P-EGES 12L/R 1/4WD | 65311601 | | | | | | | ● | ● | ● | | | | | | | | | | | | |
| 4530 | T-UNION P-TV 12 L | 65311344 | | | | | | | ● | ● | ● | | | | | | | | | | | | |
| 4560 | STOPPER D15/10X21 VSD 12L/S O.M.MB | 65311607 | | | | | | | ● | ● | ● | | | | | | | | | | | | |
| 4580 | GAS VALVE MBC1900 SE DN65 40-80MBAR | 65311844 | | | | | | | ● | | | | | | | | | | | | | | |
| | GAS VALVE MBC3100 SE DN80 40-80 MBAR | 65311845 | | | | | | | | ● | | | | | | | | | | | | | |
| | GAS VALVE MBC5000 SE DN100 40-80 MBAR | 65311846 | | | | | | | | | ● | | | | | | | | | | | | |
| 4620 | GASKET/GASTRAIN D127/77X2 DN65 | 65311611 | | | | | | | ● | | | | | | | | | | | | | | |
| | GASKET/GASTRAIN D142/90X2 DN80 | 65311612 | | | | | | | | ● | | | | | | | | | | | | | |
| | GASKET/GASTRAIN D162/115X2 DN100 | 65311613 | | | | | | | | | ● | | | | | | | | | | | | |
| 4640 | GAS PRESS.SWITCH GW 150 A6 5-150MB DIN | 65323022 | OPTION | | | | | | ● | ● | ● | | | | | | | | | | | | |
| | GAS PRESS.SWITCH GW 500 A5 30-500MB | 65310852 | 30-500mb | | | | | | ● | ● | ● | | | | | | | | | | | | |
| 4650 | CONNECTOR GDMW 30-11 DF | 65311615 | | | | | | | ● | ● | ● | | | | | | | | | | | | |
| 4800 | GAS FILTER GF100MF-3232-A-1 DN100 1BAR | 65311462 | | | | | | | | | ● | | | | | | | | | | | | |
| | GAS FILTER GF65MF-2020-A-1 DN65 1BAR | 65311460 | | | | | | | ● | | | | | | | | | | | | | | |
| | GAS FILTER GF80MF-2424-A-1 DN80 1BAR | 65311461 | | | | | | | | ● | | | | | | | | | | | | | |
| 4801 | STRAINER GF 100 MF | 65311889 | | | | | | | | | ● | | | | | | | | | | | | |
| | STRAINER GF 65 MF | 65311723 | | | | | | | ● | | | | | | | | | | | | | | |
| | STRAINER GF 80 MF | 65311888 | | | | | | | | ● | | | | | | | | | | | | | |
| 5000 | ACCESSORY | | | | | | | | | | | | | | | | | | | | | | |
| 5010 | TRIAL BURNER WITH PUSH-BUTTON PB2 | 65311362 | | | | | | | ● | ● | ● | | ● | ● | ● | ● | | | | | | | |

5000

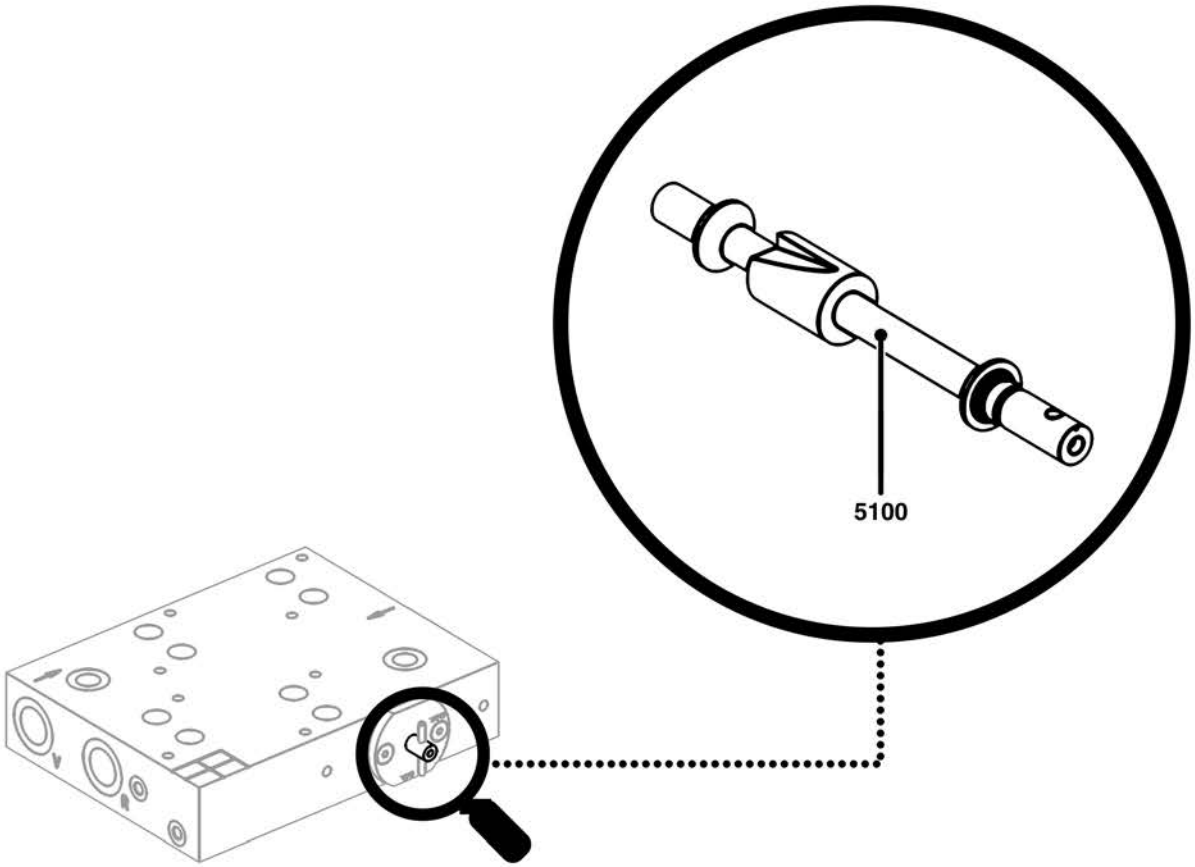


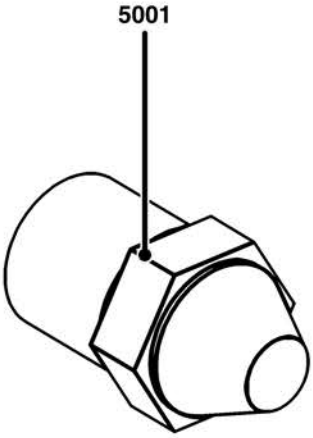

| | Description | Manf. Pt. N | Type | N 8.5800 GL-E BT3 (1) | N 8.7100 GL-E BT3 (2) | N 9.8700 GL-E BT3 (3) | N 9.10400 GL-E BT3 (4) | GT-d457-2 (5) | GT-d458-65 (6) | GT-d459-80 (7) | GT-d460-100 (8) | GT-s457-2 (9) | GT-s458-65 (10) | GT-s459-80 (11) | GT-s460-100 (12) | GT-s461-125 (13) | 14 | 15 | 16 | 17 | 18 | From | to |
|---|---|---|---|---|---|---|---|---|---|---|---|---|---|---|---|---|---|---|---|---|---|---|---|
| 5000 | ACCESSORY | | | | | | | | | | | | | | | | | | | | | | |
| 5001 | NOZZLE BER 275KG 55° CBM | 65313182 | | ● | ● | | | | | | | | | | | | | | | | | | |
| | NOZZLE BER 300KG 55° CBM | 65313183 | | ● | ● | | | | | | | | | | | | | | | | | | |
| | NOZZLE BER 350KG 55° CBM | 1458645325 | | ● | ● | | | | | | | | | | | | | | | | | | |
| | NOZZLE BER 400KG 55° CBM | 1458645347 | | ● | ● | | | | | | | | | | | | | | | | | | |
| | NOZZLE BER 450KG 55° CBM | 65313184 | | ● | ● | | | | | | | | | | | | | | | | | | |
| | NOZZLE BER 500KG 55° CBM | 65313185 | | ● | ● | | | | | | | | | | | | | | | | | | |
| | NOZZLE BER 550KG 55° CBM | 65313851 | | ● | | | | | | | | | | | | | | | | | | | |
| | NOZZLE BER 600KG 55° CBM | 65313186 | | | ● | | | | | | | | | | | | | | | | | | |
| | NOZZLE DZ1000 1000KG 80° M14 1-5 | 1458698891 | | | | | ● | | | | | | | | | | | | | | | | |
| | NOZZLE DZ1000 550KG 80° M14 1-5 | 65313852 | | | | ● | | | | | | | | | | | | | | | | | |
| | NOZZLE DZ1000 650KG 80° M14 1-5 | 65313854 | | | | ● | | | | | | | | | | | | | | | | | |
| | NOZZLE DZ1000 700KG 80° M14 1-5 | 65313853 | | | | ● | ● | | | | | | | | | | | | | | | | |
| | NOZZLE DZ1000 750KG 80° M14 1-5 | 1458698846 | | | | ● | ● | | | | | | | | | | | | | | | | |
| | NOZZLE DZ1000 800KG 80° M14 1-5 | 65312421 | | | | ● | ● | | | | | | | | | | | | | | | | |
| | NOZZLE DZ1000 850KG 80° M14 1-5 | 65313855 | | | | | ● | | | | | | | | | | | | | | | | |
| | NOZZLE DZ1000 900KG 80° M14 1-5 | 65313190 | | | | | ● | | | | | | | | | | | | | | | | |
| | NOZZLE DZ1000 950KG 80° M14 1-5 | 65311201 | | | | | ● | | | | | | | | | | | | | | | | |
| 5100 | CONTROL SHAFT 5.0 LEFT HAND. | 65312302 | | ● | ● | | | | | | | | | | | | | | | | | | |
| | CONTROL SHAFT 6.0 LEFT HAND. | 65312303 | | ● | ● | | | | | | | | | | | | | | | | | | |
| | CONTROL SHAFT 7.0 LEFT HAND. | 65312304 | | ● | ● | | | | | | | | | | | | | | | | | | |
| | CONTROL SHAFT 7.0 LEFT HAND. GR.2 | 65312292 | | | | ● | ● | | | | | | | | | | | | | | | | |
| | CONTROL SHAFT 8.0 LEFT HAND. | 65312305 | | ● | ● | | | | | | | | | | | | | | | | | | |
| | CONTROL SHAFT 8.0 LEFT HAND. GR.2 | 65312285 | | | | | ● | | | | | | | | | | | | | | | | |
| | CONTROL SHAFT 9.0 LEFT HAND. GR.2 | 65312293 | | | | | ● | | | | | | | | | | | | | | | | |

| | 6XXXXXXX | DE<br>NL | FR<br>ES | IT | X |
|---|---|---|---|---|---|
| 1010 | 65311967 | FLANSCH 37X62X15 D12 KFL001<br>FLENS 37X62X15 D12 KFL001 | BRIDE 37X62X15 D12 KFL001<br>BRIDA 37X62X15 D12 KFL001 | FLANGIA 37X62X15 D12 KFL001 | 1 |
| 1015 | 65311657 | VERSTELLANZEIGER LUFTKLAPPE<br>INDICATOR LUCHTKLEP | INDICATEUR POSITION VOLET AIR<br>INDICADOR VALVULA AIRE | INDICE POSIZIONE SERRANDA ARIA | 1 |
| 1020 | 65311689 | STELLANTRIEB HALTER / LUFTKLAPPE<br>STEUN REGELMOTOR / LUCHTKLEP | SUPPORT SERVOMOTEUR / VOLET AIR<br>SOPORTE SERVOMOTOR / VALVULA AIRE | SUPPORTO SERVOMOTORE / SERRANDA ARIA | 1 |
| 1030 | 65311650 | STELLANTRIEB STE 4,5 Q3.51/6+KABEL L3000<br>SERVOMOTOR STE 4,5 Q3.51/6+KABEL L3000 | SERVOMOTEUR STE 4,5 Q3.51/6+CABLE L3000<br>SERVOMOTOR STE 4,5 Q3.51/6+CABLE L3000 | SERVOMOTORE STE 4,5 Q3.51/6+CAVO L3000 | 1 |
| | 65311833 | STELLANTRIEB STM 40 Q15.51/8 2NR<br>REGELMOTOR STM 40 Q15.51/8 2NR | SERVOMOTEUR STM 40 Q15.51/8 2NR<br>SERVOMOTOR STM 40 Q15.51/8 2NR | SERVOMOTORE STM 40 Q15.51/8 2NR | 1 |
| 1035 | 1658418384 | INDUKT. NÄHERUNGSSCHALTER NAMUR D14<br>SENSOR NAMUR D14, B12/G12/Y1 | CAPTEUR NAMUR D14<br>SENSOR NAMUR D14 | SENSORE NAMUR D14 | 1 |
| 1040 | 65311665 | ANSAUGTRICHTER D332 X 127,5<br>LUCHTINLAAT D332x127,5 | RECYCLAGE AIR D332X127,5<br>ENTRADA DE AIRE D332x127,5 | CONVOGLIATORE D332x127,5 | 1 |
| | 65311672 | ANSAUGTRICHTER D318 X 134<br>LUCHTINLAAT D318x134 | RECYCLAGE AIR D318X134<br>ENTRADA DE AIRE D318x134 | CONVOGLIATORE D318x134 | 1 |
| | 65311673 | ANSAUGTRICHTER D288 X 127<br>LUCHTINLAAT D288x127 | RECYCLAGE AIR D288X127<br>ENTRADA DE AIRE D288x127 | CONVOGLIATORE D288x127 | 1 |
| | 65311715 | ANSAUGTRICHTER D344X126<br>LUCHTINLAAT D344x126 | RECYCLAGE AIR D344X126<br>ENTRADA DE AIRE D344x126 | CONVOGLIATORE D344x126 | 1 |
| 1050 | 1180603227 | SCHAUGLAS F.MONOBL.KLAR D55X21<br>KIJKGLAS D55X21 | VERRE DE REGARD D55x21 CLAIR<br>MIRILLA INCOLORA D55X21 | SPIONCINO INCOLORE D55X21 | 1 |
| 1060 | 1188052260 | SCHAUGLASDECKEL Z.MONOBL.55X61<br>DEKSEL/KIJKGLAS D55X61 | CACHE REGARD D55X61<br>TAPA/MIRILLA D55X61 | COPERCHIO/SPIONCINO D55X61 | 1 |
| 1070 | 1180559591 | MUTTER SCHAUGLAS M48X1,5 SW60<br>MOER/KIJKGLAS M48X1,5 SW60 | ECROU REGARD M48X1,5 SW60<br>TUERCA/MIRILLA M48X1,5 SW60 | DADO/SPIONCINO M48X1,5 SW60 | 1 |
| 1080 | 65311670 | VENTILATORRAD D556/320X86 D42<br>VENTILATORWIEL D556/320X86 D42 | TURBINE D556/320X86 D42<br>TURBINA D556/320X86 D42 | VENTOLA D556/320X86 D42 | 1 |
| | 65311716 | VENTILATORRAD D533/290X83 D42<br>VENTILATORWIEL D533/290X83 D42 | TURBINE D533/290X83 D42<br>TURBINA D533/290X83 D42 | VENTOLA D533/290X83 D42 | 1 |
| | 65311717 | VENTILATORRAD D590/334X92 D42<br>VENTILATORWIEL D590/334X92 D42 | TURBINE D590/334X92 D42<br>TURBINA D590/334X92 D42 | VENTOLA D590/334X92 D42 | 1 |
| | 65311718 | VENTILATORRAD D600/346X93 D48<br>VENTILATORWIEL D600/346X93 D48 | TURBINE D600/346X93 D48<br>TURBINA D600/346X93 D48 | VENTOLA D600/346X93 D48 | 1 |
| 1090 | 65311471 | ZUENDTRAFO EBI 1X11 230V<br>ONTSTEKINGSTRAFO EBI 1X11 230V | ALLUMEUR EBI 1X11 230V<br>ENCENDEDOR EBI 1X11 230V | TRASFORMATORE ACCENSIONE EBI 1X11 230V | 1 |
| 1091 | 1738733651 | ZUENDTRAFO ZA 20 140 E21 2005.0450.073<br>ONTSTEKINGSTRAFO ZA20 140E21 REP.ZM20/14 | ALLUMEUR ZA 20 140 E21 REMPLACE ZM20/14<br>ENCENDEDOR ZA 20 140 E21 REP.ZM20/14 | TRASFO. ACC. ZA 20 140 E21 SOS.ZM20/14 | 1 |
| 1095 | 13019357 | KOMPAKTFLAMMENWAECHTER D-LX100 EK-S (IR)<br>FOTOCEL D-LX100 EK-S (IR) | CELLULE D-LX100 EK-S (IR)<br>CELULA D-LX100 EK-S (IR) | FOTOCELLULA D-LX100 EK-S (IR) | 1 |
| | 65312274 | FLAMMENFUEHLER FFS08-UV1 659D31 - 5M<br>FOTOCEL FFS08-UV1 659D31 - 5M W/O | CELLULE FFS08-UV1 659D31 - 5M W/O<br>CELULA FFS08-UV1 659D31 - 5M W/O | CELLULA FFS08-UV1 659D31 - 5M W/O | 1 |
| 1100 | 65311472 | SICHTSPIEGEL FÜR SCHAUGLAS<br>SPIEGEL/KIJKGLAS | MIROIR/REGARD<br>ESPEJO/MIRILLA | SPECCHIO/SPIONCINO | 1 |
| 1110 | 65311595 | DRUCKWAECHTER LGW 50 A2P 2,5-50MBAR<br>DRUKSCHAKELAAR LGW 50 A2P 2,5-50MBAR | MANOSTAT AIR LGW 50 A2P 2,5-50MB<br>PRESOSTATO AIRE LGW 50 A2P 2,5-50MB | PRESSOSTATO ARIA LGW 50 A2P 2,5-50MB | 1 |
| 1120 | 65310688 | RINGDROSSELKLAPPE BVG 100 Z05 Z<br>GASKLEP BVG D100 Z05 Z | CLAPET GAZ ASS. D100 Z05 Z<br>VALVOLA DEL GAS ENSAMB. D100 Z05 Z | VALVOLA DEL GAS ASS. D100 Z05 Z | 1 |
| 1130 | 65311659 | DISTANZBOLZEN SW13X55<br>AFSTANDHOUDER SW13X55 | ENTRETOISE SW13X55<br>DISTANCIADOR SW13X55 | DISTANZIATORE SW13X55 | 1 |
| 1140 | 65311658 | STELLANTRIEB HALTER / GASKLAPPE<br>STEUN REGELMOTOR / GASKLEP | SUPPORT SERVOMOTEUR / CLAPET GAZ<br>SOPORTE SERVOMOTOR / VALVOLA DEL GAS | SUPPORTO SERVOMOTORE / VALVOLA DEL GAS | 1 |
| 1150 | 65311660 | KUPPLUNG GASKLAPPE N8 / N9<br>KOPPELING GASKLEP / REGELMOTOR STE N8-N9 | ACCOUPLEMENT CLAPET GAZ/SERVOM.STE N8-N9<br>ACOPLAMIENT.VALVOLA GAS/SERVOM.STE N8-N9 | GIUNTO VALVOLA GAS/SERVOMOTORE STE N8-N9 | 1 |
| 1160 | 65311650 | STELLANTRIEB STE 4,5 Q3.51/6+KABEL L3000<br>SERVOMOTOR STE 4,5 Q3.51/6+KABEL L3000 | SERVOMOTEUR STE 4,5 Q3.51/6+CABLE L3000<br>SERVOMOTOR STE 4,5 Q3.51/6+CABLE L3000 | SERVOMOTORE STE 4,5 Q3.51/6+CAVO L3000 | 1 |
| | 65311833 | STELLANTRIEB STM 40 Q15.51/8 2NR<br>REGELMOTOR STM 40 Q15.51/8 2NR | SERVOMOTEUR STM 40 Q15.51/8 2NR<br>SERVOMOTOR STM 40 Q15.51/8 2NR | SERVOMOTORE STM 40 Q15.51/8 2NR | 1 |
| 1170 | 65326333 | MOTOR 11KW 400/690V D42 IE3 ELV SCHWARZ<br>MOTOR 11KW 400/690V D42 IE3 ELV ZWART | MOTEUR 11KW 400/690V D42 IE3 ELV NOIR<br>MOTOR 11KW 400/690V D42 IE3 ELV NEGRO | MOTORE 11KW 400/690V D42 IE3 ELV NERO | 1 |
| | 65326334 | MOTOR 15KW 400/690V D42 IE3 ELV SCHWARZ<br>MOTOR 15KW 400/690V D42 IE3 ELV ZWART | MOTEUR 15KW 400/690V D42 IE3 ELV NOIR<br>MOTOR 15KW 400/690V D42 IE3 ELV NEGRO | MOTORE 15KW 400/690V D42 IE3 ELV NERO | 1 |
| | 65326335 | MOTOR 18,5KW 400/690V D42 IE3 ELV SCHWZ<br>MOTOR 18,5KW 400/690V D42 IE3 ELV ZWART | MOTEUR 18,5KW 400/690V D42 IE3 ELV NOIR<br>MOTOR 18,5KW 400/690V D42 IE3 ELV NEGRO | MOTORE 18,5KW 400/690V D42 IE3 ELV NERO | 1 |
| | 65326336 | MOTOR 22KW 400/690V D48 IE3 ELV SCHWARZ<br>MOTOR 22KW 400/690V D48 IE3 ELV ZWART | MOTEUR 22KW 400/690V D48 IE3 ELV NOIR<br>MOTOR 22KW 400/690V D48 IE3 ELV NEGRO | MOTORE 22KW 400/690V D48 IE3 ELV NERO | 1 |
| 1180 | 65311502 | MAGNET FÜR HAUBE<br>MAGNEET FEST BRANDERKAP | AIMANT FIXE CAPOT BRULEUR<br>IMÁN FIJO CUBIERTA QUEMADOR | MAGNETE FISSA COFANO BRUCIATORE | 1 |
| 1190 | 65311714 | VERBINDUNGSTANGE CS10 L200<br>VERBINDINGSTANG CS10 L200 | TIGE DE LIAISON CS10 L200<br>VARILLA DE CONEXION CS10 L200 | ASTA COLLEGAMENTO CS10 L200 | 1 |
| 1200 | 65311686 | WELLE / LUFTKLAPPE D12X673 D4H7<br>AS / LUCHTKLEP D12X673 D4H7 | AXE / VOLET AIR D12X673 D4H7<br>EJE / VALVULA AIRE D12X673 D4H7 | PERNO / SERRANDA ARIA D12X673 D4H7 | 1 |

| | 6XXXXXXX | DE<br>NL | FR<br>ES | IT | X |
|---|---|---|---|---|---|
| 1210 | 65311701 | ZAHNRAD Z=100 M=1 BO=12MM MIT BOHRG. 6MM<br>TANDWIEL Z=100 M=1 BO=12MM /BORG. 6 MM | ROUE DENTEE Z=100 M=1 BO=12MM /BORG. 6MM<br>RUEDA DENTAD.Z=100 M=1 BO=12MM /BORG.6MM | RUOTA DENTAT. Z=100 M=1 BO=12MM/BORG.6MM | 1 |
| 1220 | 65311685 | WELLE / LUFTKLAPPE D12X670 D4H7<br>AS / LUCHTKLEP D12X670 D4H7 | AXE / VOLET AIR D12X670 D4H7<br>EJE / VALVULA AIRE D12X670 D4H7 | PERNO / SERRANDA ARIA D12X670 D4H7 | 1 |
| 1225 | 65311687 | WELLE / LUFTKLAPPE D12X705 M8 + ZEIGER<br>AS / LUCHTKLEP D12X705 M8 + ADVIES | AXE / VOLET AIR D12X705 M8 + INDEX<br>EJE / VALVULA AIRE D12X705 M8 + PUNTERO | PERNO/SERRANDA ARIA D12X705 M8 + INDICE | 1 |
| 1226 | 65311688 | WELLE / LUFTKLAPPE D12X705 + ZEIGER<br>AS / LUCHTKLEP D12X705 + ADVIES | AXE / VOLET AIR D12X705 + INDEX<br>EJE / VALVULA AIRE D12X705 + PUNTERO | PERNO / SERRANDA ARIA D12X705 + INDICE | 1 |
| 1230 | 65311684 | LUFTKLAPPE<br>LUCHTKLEP | VOLET AIR<br>VALVULA AIRE | SERRANDA ARIA | 1 |
| 1605 | 65311789 | ADAPTER BT300/DFM300 RAST5<br>ADAPTER BT300/DFM300 RAST5 | ADAPTATEUR BT300/DFM300 RAST5<br>ADAPTADOR BT300/DFM300 RAST5 | ADATTATORE BT300/DFM300 RAST5 | 1 |
| 1610 | 65311790 | LCM100 (LSB-M 667R0500-1)<br>LCM100-MODULE (LSB-M 667R0500-1) | MODULE LCM100 (LSB-M 667R0500-1)<br>MÓDULO LCM100 (LSB-M 667R0500-1) | MODULO LCM100 (LSB-M 667R0500-1) | 1 |
| 1615 | 65311791 | DFM300 (LSB-M 667R0600-1)<br>DFM300-MODULE (LSB-M 667R0600-1) | MODULE DFM300 (LSB-M 667R0600-1)<br>MÓDULO DFM300 (LSB-M 667R0600-1) | MODULO DFM300 (LSB-M 667R0600-1) | 1 |
| 1620 | 65311449 | DURCHGANGSKLEMME WAGO (GRAU) 2001-1401<br>DOORVERBINDINGSKLEM WAGO GRIJS 2001-1401 | BORNE DE JONCTION WAGO (GRIS) 2001-1401<br>BORNE DE PASO WAGO (GRIS) 2001-1401 | MORSETTO PASSANTE WAGO (GRIGIO)2001-1401 | 1 |
| 1625 | 65311447 | DURCHGANGSKLEMME WAGO (NEUTRAL)2001-1404<br>DOORVERBINDINGSKLEM WAGO (N) 2001-1404 | BORNE DE JONCTION WAGO (NEUTRE)2001-1404<br>BORNE DE PASO WAGO (NEUTRO) 2001-1404 | MORSETTO PASSANTE WAGO (NEUTRO)2001-1404 | 1 |
| 1626 | 65311445 | DURCHGANGSKLEMME WAGO (PE) 2001-1407<br>DOORVERBINDINGSKLEM WAGO (PE) 2001-1407 | BORNE DE JONCTION WAGO (TERRE) 2001-1407<br>BORNE DE PASO WAGO (PE) 2001-1407 | MORSETTO PASSANTE WAGO (TERRA) 2001-1407 | 1 |
| 1640 | 65311446 | WAG BETAETIGUNGSWERKZEUG 2009-309<br>BEDIENINGSGEREEDSCHAP WAG 2009-309 | OUTIL DE MANOEUVRE WAG 2009-309<br>HERRAMIENTA D.ACCIONAM. WAG 2009-309 | DISPOSITIVO DI MANOVRA WAG 2009-309 | 1 |
| 1645 | 65311793 | MOTORSCHUETZ SCH D 3-4KW LC1D09P7<br>CONTACT MOTOR SCH D 3-4kW LC1D09P7 | CONTACTEUR MOTEUR SCH D 3-4kW LC1D09P7<br>CONTACTOR DE MOTOR SCH D 3-4kW LC1D09P7 | CONTATTORE MOTORE SCH D 3-4kW LC1D09P7 | 1 |
| 1650 | 65311794 | MOTORSCHUTZSCHALTER 3-4KW GV2ME14<br>VERMOGENSCHAKEL. MOTOR 3-4KW GV2ME14 | DISJONCTEUR MOTEUR 3-4KW GV2ME14<br>INTERRUPTOR MOTOR 3-4KW GV2ME14 | INTERRUTTORE MOTORE 3-4KW GV2ME14 | 1 |
| 1651 | 65311795 | HILFSSCHALTER GVAE11<br>HULPSCHAKELAAR GVAE11 | CONTACT AUXILIAIRE GVAE11<br>INTERRUPTOR AUXILIAR GVAE11 | INTERRUTTORE AUSILIARIO GVAE11 | 1 |
| 1655 | 65311796 | MOTORSTARTER Y/D 18KW LC3D18AP7<br>MOTOR STARTER Y/D 18KW LC3D18AP7 | DEMARREUR MOT. ET./TRI. 18KW LC3D18P7<br>ARRANQUE MOTOR Y/D 18KW LC3D18AP7 | AVVIATORE STELLA/TRIA. 18KW LC3D18P7 | 1 |
| | 65311797 | MOTORSTARTER Y/D 22KW LC3D32AP7<br>MOTOR STARTER Y/D 22KW LC3D32AP7 | DEMARREUR MOT. ET./TRI. 22KW LC3D32AP7<br>ARRANQUE MOTOR Y/D 22KW LC3D32AP7 | AVVIATORE STELLA/TRIA. 22KW LC3D32AP7 | 1 |
| | 65312015 | MOTORSTARTER Y/D 11KW LC3D12AP7<br>MOTOR STARTER Y/D 11KW LC3D12AP7 | DEMARREUR MOT. ET./TRI. 11KW LC3D12AP7<br>ARRANQUE MOTOR Y/D 11KW LC3D12AP7 | AVVIATORE STELLA/TRIA. 11KW LC3D12AP7 | 1 |
| 1660 | 65311798 | MOTORSCHUTZSCHALTER 15KW GV2ME32<br>VERMOGENSCHAKEL. MOTOR 15KW GV2ME32 | DISJONCTEUR MOTEUR 15KW GV2ME32<br>INTERRUPTOR MOTOR 15KW GV2ME32 | INTERRUTTORE MOTORE 15KW GV2ME32 | 1 |
| | 65311917 | MOTORSCHUTZSCHALTER 22KW GV3P50<br>VERMOGENSCHAKEL. MOTOR 22KW GV3P50 | DISJONCTEUR MOTEUR 22KW GV3P50<br>INTERRUPTOR MOTOR 22KW GV3P50 | INTERRUTTORE MOTORE 22KW GV3P50 | 1 |
| | 65312018 | MOTORSCHUTZSCHALTER 11KW GV2ME22<br>VERMOGENSCHAKEL. MOTOR 11KW GV2ME22 | DISJONCTEUR MOTEUR 11KW GV2ME22<br>INTERRUPTOR MOTOR 11KW GV2ME22 | INTERRUTTORE MOTORE 11KW GV2ME22 | 1 |
| | 65312019 | MOTORSCHUTZSCHALTER 18,5KW GV3P40<br>VERMOGENSCHAKEL. MOTOR 18,5KW GV3P40 | DISJONCTEUR MOTEUR 18,5KW GV3P40<br>INTERRUPTOR MOTOR 18,5KW GV3P40 | INTERRUTTORE MOTORE 18,5KW GV3P40 | 1 |
| 1661 | 65311795 | HILFSSCHALTER GVAE11<br>HULPSCHAKELAAR GVAE11 | CONTACT AUXILIAIRE GVAE11<br>INTERRUPTOR AUXILIAR GVAE11 | INTERRUTTORE AUSILIARIO GVAE11 | 1 |
| 1665 | 65311919 | GERAETETRAEGER 3-FACH M22-A<br>APPARATENHOUDER, 3-VOUDIG M22-A | SUPPORT EQUIPEMENT, 3 NIVEAUX M22-A<br>SOPORTE PARA APARATO, 3 NIVELES M22-A | SUPPORTO STRUMENTI, 3 LIVELLI M22-A | 1 |
| 1666 | 65311443 | DURCHGANGSKLEMME WAGO (GRAU) 2001-1201<br>DOORVERBINDINGSKLEM WAGO GRIJS 2001-1201 | BORNE DE JONCTION WAGO (GRIS) 2001-1201<br>BORNE DE PASO WAGO (GRIS) 2001-1201 | MORSETTO PASSANTE WAGO (GRIGIO)2001-1201 | 1 |
| 1667 | 65311444 | DURCHGANGSKLEMME WAGO (PE) 2001-1207<br>DOORVERBINDINGSKLEM WAGO (PE) 2001-1207 | BORNE DE JONCTION WAGO (TERRE) 2001-1207<br>BORNE DE PASO WAGO (PE) 2001-1207 | MORSETTO PASSANTE WAGO (TERRA) 2001-1207 | 1 |
| 1670 | 65311920 | LED-W FRONTBEF. M22-CLED230-WS<br>LED-ELEMENT, WIT M22-CLED230 | ELEMENT LED, BLANC M22-CLED230<br>ELEMENTO LED, BLANCO M22-CLED230 | ELEMENTO A LED, BIANCO M22-CLED230 | 1 |
| | 65311921 | KONT. OE FRONTBEF. M22 -CK01<br>VERBREEKCONTACT M22 -CK01 | CONTACT A OUVERTURE M22 -CK01<br>CONTACTO DE APERTURA M22 -CK01 | CONTATTO DI APERTURA M22 -CK01 | 1 |
| | 65311922 | DOPPELKONT. 2OE FRONTBEF. M22-CK02<br>DUBBEL VERBREEKCONTACT M22-CK02 | CONTACT A DOUBLE OUVERTURE M22-CK02<br>CONTACTO DE APERTURA DOBLE M22-CK02 | CONTATTO A DOPPIA APERTURA M22-CK02 | 1 |
| | 65311923 | KONT. S FRONTBEF. M22-CK10<br>MAAKCONTACT M22-CK10 | CONTACT A FERMETURE M22-CK10<br>CONTACTO DE CIERRE M22-CK10 | CONTATTO DI CHIUSURA M22-CK10 | 1 |
| | 65311924 | DOPPELKONT. 2S FRONTBEF. M22-CK20<br>DUBBEL MAAKCONTACT M22-CK20 | CONTACT A DOUBLE FERMETURE M22-CK20<br>CONTACTO DE CIERRE DOBLE M22-CK20 | CONTATTO A DOPPIA CHIUSURA M22-CK20 | 1 |
| 1675 | 65312454 | FEUERUNGSAUTOMAT BT340 GL-E<br>BRANDERAUTOMAAT BT340 GL-E | COFFRET BT340 GL-E<br>PROGRAMADOR BT340 GL-E | APPARECCHIATURA BT340 GL-E | 1 |
| 1676 | 65311926 | LAMTEC BT300-BLINDABD.X30-X34 667R0001<br>BLINDE AFDEKKING X30-X34 667R0001 | CACHE X30-X34 667R0001<br>CUBIERTA X30-X34 667R0001 | COPERTURA SCHERMATA X30-X34 667R0001 | 1 |
| 1680 | 65311927 | DURCHGANGSKLEMME WAGO (ORANGE) 2001-1402<br>DOORVERBINDINGSKLEM WAGO ORANGE2001-1402 | BORNE DE JONCTION WAGO (ORANGE)2001-1402<br>BORNE DE PASO WAGO (NARANJA) 2001-1402 | MORSETTO PASSANTE WAGO(ARANCIO)2001-1402 | 1 |
| 1685 | 65311445 | DURCHGANGSKLEMME WAGO (PE) 2001-1407<br>DOORVERBINDINGSKLEM WAGO (PE) 2001-1407 | BORNE DE JONCTION WAGO (TERRE) 2001-1407<br>BORNE DE PASO WAGO (PE) 2001-1407 | MORSETTO PASSANTE WAGO (TERRA) 2001-1407 | 1 |
| 1690 | 65311449 | DURCHGANGSKLEMME WAGO (GRAU) 2001-1401<br>DOORVERBINDINGSKLEM WAGO GRIJS 2001-1401 | BORNE DE JONCTION WAGO (GRIS) 2001-1401<br>BORNE DE PASO WAGO (GRIS) 2001-1401 | MORSETTO PASSANTE WAGO (GRIGIO)2001-1401 | 1 |

| | 6XXXXXXX | DE<br>NL | FR<br>ES | IT | X |
|---|---|---|---|---|---|
| 1695 | 65311447 | DURCHGANGSKLEMME WAGO (NEUTRAL)2001-1404<br>DOORVERBINDINGSKLEM WAGO (N) 2001-1404 | BORNE DE JONCTION WAGO (NEUTRE)2001-1404<br>BORNE DE PASO WAGO (NEUTRO) 2001-1404 | MORSETTO PASSANTE WAGO (NEUTRO)2001-1404 | 1 |
| 1700 | 65311451 | KABELVERSCHRAUBUNG M16<br>PAKKINGBUS M16 | PRESSE-ETOUPE M16<br>PRENSAESTOPAS M16 | PREMISTOPPA M16 | 1 |
| 1701 | 65311758 | KABELVERSCHRAUBUNG M20<br>PAKKINGBUS M20 | PRESSE-ETOUPE M20<br>PRENSAESTOPAS M20 | PREMISTOPPA M20 | 1 |
| | 65311759 | KABELVERSCHRAUBUNG M25<br>PAKKINGBUS M25 | PRESSE-ETOUPE M25<br>PRENSAESTOPAS M25 | PREMISTOPPA M25 | 1 |
| 1705 | 65311443 | DURCHGANGSKLEMME WAGO (GRAU) 2001-1201<br>DOORVERBINDINGSKLEM WAGO GRIJS 2001-1201 | BORNE DE JONCTION WAGO (GRIS) 2001-1201<br>BORNE DE PASO WAGO (GRIS) 2001-1201 | MORSETTO PASSANTE WAGO (GRIGIO)2001-1201 | 1 |
| 1710 | 65311441 | DURCHGANGSKLEMME WAGO (ORANGE) 2001-1202<br>DOORVERBINDINGSKLEM WAGO ORANGE2001-1202 | BORNE DE JONCTION WAGO (ORANGE)2001-1202<br>BORNE DE PASO WAGO (NARANJA) 2001-1202 | MORSETTO PASSANTE WAGO(ARANCIO)2001-1202 | 1 |
| 1715 | 65311931 | LEITG.SCHUTZS BA 1P SCHNEIDER 23614<br>ZEKERING 1P SCHNEIDER 23614 | COUPE-CIRCUIT AUTOMATIQUE 1P SCHNEIDER 2<br>FUSIBLE AUTOMÁTICO | INTERRUTTORE AUTOMATICO 1P SCHNEIDER 236 | 1 |
| 1716 | 65311932 | KLEMMLEISTE WAGO STRG. N6-9 GL-E BT<br>KLEMMENSTROOK WAGO STRG. N6-9 GL-E BT | BORNIER WAGO STRG. N6-9 GL-E BT<br>REGLETA DE BORNES WAGO STRG.N6-9 GL-E BT | MORSETTIERA WAGO STRG. N6-9 GL-E BT | 1 |
| 1720 | 65311933 | KABELVERSCHRAUBUNG M.RED. M32X1.5 SW<br>PAKKINGBUS M32X1,5 | PRESSE-ETOUPE M32X1,5<br>PRENSAESTOPAS M32X1,5 | PREMISTOPPA M32X1,5 | 1 |
| | 65311934 | KABELVERSCHRAUBUNG M.RED. M40X1.5 SW<br>PAKKINGBUS M40X1,5 | PRESSE ETOUPE A VIS M40X1,5<br>PRENSAESTOPAS M40X1,5 | PREMISTOPPA A VIS M40X1,5 | 1 |
| 1725 | 65311935 | REDUZIERST.SKINDICHT KU-M M40X1.5/32X1.5<br>REDUCEERD. SKINDICHT KU-M M40x1,5/32X1.5 | REDUCTEUR SKINDICHT KU-M M40x1,5/32X1.5<br>REDUCTOR SKINDICHT KU-M M40x1,5/32X1.5 | RIDUTTORE SKINDICHT KU-M M40x1,5/32X1.5 | 1 |
| 1730 | 65311936 | GEGENMUTTER MS M40X1.5<br>CONTRAMOER M40X1,5 | CONTRE-ECROU M40X1,5<br>CONTRATUERCA M40X1,5 | CONTRODADO M40X1,5 | 1 |
| 1731 | 65311937 | DURCHGANGSKLEMME WAGO (GRAU) 2010-1301<br>DOORVERBINDINGSKLEM WAGO GRIJS 2010-1301 | BORNE DE JONCTION WAGO (GRIS) 2010-1301<br>BORNE DE PASO WAGO (GRIS) 2010-1301 | MORSETTO PASSANTE WAGO (GRIGIO)2010-1301 | 1 |
| | 65311938 | DURCHGANGSKLEMME WAGO (GRAU) 2016-1301<br>DOORVERBINDINGSKLEM WAGO GRIJS 2016-1301 | BORNE DE JONCTION WAGO (GRIS) 2016-1301<br>BORNE DE PASO WAGO (GRIS) 2016-1301 | MORSETTO PASSANTE WAGO (GRIGIO)2016-1301 | 1 |
| | 65312106 | DURCHGANGSKLEMME WAGO (GRAU) 2006-1301<br>DOORVERBINDINGSKLEM WAGO GRIJS 2006-1301 | BORNE DE JONCTION WAGO (GRIS) 2006-1301<br>BORNE DE PASO WAGO (GRIS) 2006-1301 | MORSETTO PASSANTE WAGO (GRIGIO)2006-1301 | 1 |
| 1732 | 65311939 | DURCHGANGSKLEMME WAGO (PE) 2016-1307<br>DOORVERBINDINGSKLEM WAGO (PE) 2016-1307 | BORNE DE JONCTION WAGO (TERRE) 2016-1307<br>BORNE DE PASO WAGO (PE) 2016-1307 | MORSETTO PASSANTE WAGO (TERRA) 2016-1307 | 1 |
| | 65312040 | DURCHGANGSKLEMME WAGO (PE) 2010-1307<br>DOORVERBINDINGSKLEM WAGO (PE) 2010-1307 | BORNE DE JONCTION WAGO (TERRE)<br>BORNE DE PASO WAGO (PE) 2010-1307 | MORSETTO PASSANTE WAGO (TERRA) | 1 |
| | 65312107 | DURCHGANGSKLEMME WAGO (PE) 2006-1307<br>DOORVERBINDINGSKLEM WAGO (PE) 2006-1307 | BORNE DE JONCTION WAGO (TERRE) 2006-1307<br>BORNE DE PASO WAGO (PE) 2006-1307 | MORSETTO PASSANTE WAGO (TERRA) 2006-1307 | 1 |
| 1735 | 65311436 | EATON SCHALTER 3 ST. R M22-WRLK3-W<br>VERLICHTE KEUZESCHAK., 3STANDEN, BLOKK. | SELECTEUR RETRO-ECL., 3 POS.,VERROUILL.<br>BOTÓN DE SELEC. LUMIN., 3 NIVELES, ENCAJ | TASTO DI SELEZ. ILLUM., A 3 STADI, STABI | 1 |
| 1740 | 65311437 | EATON SCHALTER 3 ST. T M22-WLK3-W<br>VERLICHTE KEUZESCHAK., 3STANDEN, BLOKK. | SELECTEUR RETRO-ECL., 3 POS.,VERROUILL.<br>BOTÓN DE SELEC. LUMIN., 3 NIVELES, ENCAJ | TASTO DI SELEZ. ILLUM., A 3 STADI, STABI | 1 |
| 1745 | 65326869 | ANZEIGE FUR FEUERUNGSAUTOMAT BT3XX<br>DISPLAY VOOR BRANDERAUTOMAAT BT3XX | AFFICHEUR POUR COFFRET BT3XX<br>PANTALLA PARA PROGRAMADOR BT3XX | DISPLAY PER APPARECCHIATURA BT3XX | 1 |
| 1750 | 65311364 | DICHTUNG/ANZEIGE 152/140X80/70X2<br>PAKKING/DISPLAY 152/140X80/70X2 | JOINT/AFFICHEUR 152/140X80/70X2<br>JUNTA/PANTALLA 152/140X80/70X2 | GUARNIZIONE/DISPLAY 152/140X80/70X2 | 1 |
| 1755 | 65311438 | EATON SCHALTER 2 ST. R M22-WRLK-W<br>VERLICHTE KEUZESCHAK., 2STANDEN, BLOKK. | SELECTEUR RETRO-ECL., 2 POS.,VERROUILL.<br>BOTÓN DE SELEC. LUMIN., 2 NIVELES, ENCAJ | TASTO DI SELEZ. ILLUM., A 2 STADI, STABI | 1 |
| 2020 | 65312078 | BRENNERROHR D369/400/320 L617<br>BRANDERBUIS D369/400/320 L617 | TUBE DE FLAMME D369/400/320 L617<br>TUBO DE LLAMA D369/400/320 L617 | BOCCAGLIO D369/400/320 L617 | 1 |
| | 65312079 | BRENNERROHR D369/400/320 L757<br>BRANDERBUIS D369/400/320 L757 | TUBE DE FLAMME D369/400/320 L757<br>TUBO DE LLAMA D369/400/320 L757 | BOCCAGLIO D369/400/320 L757 | 1 |
| | 65312080 | BRENNERROHR D369/400/320 L897<br>BRANDERBUIS D369/400/320 L897 | TUBE DE FLAMME D369/400/320 L897<br>TUBO DE LLAMA D369/400/320 L897 | BOCCAGLIO D369/400/320 L897 | 1 |
| | 65312081 | BRENNERROHR D369/415/351 L638<br>BRANDERBUIS D369/415/351 L638 | TUBE DE FLAMME D369/415/351 L638<br>TUBO DE LLAMA D369/415/351 L638 | BOCCAGLIO D369/415/351 L638 | 1 |
| | 65312082 | BRENNERROHR D369/415/351 L778<br>BRANDERBUIS D369/415/351 L778 | TUBE DE FLAMME D369/415/351 L778<br>TUBO DE LLAMA D369/415/351 L778 | BOCCAGLIO D369/415/351 L778 | 1 |
| | 65312083 | BRENNERROHR D369/415/351 L918<br>BRANDERBUIS D369/415/351 L918 | TUBE DE FLAMME D369/415/351 L918<br>TUBO DE LLAMA D369/415/351 L918 | BOCCAGLIO D369/415/351 L918 | 1 |
| | 65312084 | BRENNERROHR D431,5/373 L408<br>BRANDERBUIS D431,5/373 L408 | TUBE DE FLAMME D431,5/373 L408<br>TUBO DE LLAMA D431,5/373 L408 | BOCCAGLIO D431,5/373 L408 | 1 |
| | 65312085 | BRENNERROHR D431,5/373 L558<br>BRANDERBUIS D431,5/373 L558 | TUBE DE FLAMME D431,5/373 L558<br>TUBO DE LLAMA D431,5/373 L558 | BOCCAGLIO D431,5/373 L558 | 1 |
| | 65312086 | BRENNERROHR D431,5/373 L708<br>BRANDERBUIS D431,5/373 L708 | TUBE DE FLAMME D431,5/373 L708<br>TUBO DE LLAMA D431,5/373 L708 | BOCCAGLIO D431,5/373 L708 | 1 |
| 2110 | 65311881 | DRALLSTAUSCHEIBE D330/74 BEF.230MM 45GRD<br>STUWPLAAT D330/74 BEF.230MM | DEFLECTEUR D330/74 BEF.230MM<br>DEFLECTOR D330/74 BEF.230MM | DIFFUSORE D330/74 BEF.230MM | 1 |
| | 65312087 | DRALLSTAUSCHEIBE D320/74X67 20SL<br>STUWPLAAT D320/74X67 20SL | DEFLECTEUR D320/74X67 20SL<br>DEFLECTOR D320/74X67 20SL | DIFFUSORE D320/74X67 20SL | 1 |
| | 65312088 | DRALLSTAUSCHEIBE D300/281/120 N9 GL-E<br>STUWPLAAT D300/74X67 20SL | DEFLECTEUR D300/74X67 20SL<br>DEFLECTOR D300/74X67 20SL | DIFFUSORE D300/74X67 20SL | 1 |
| 2120 | 65312089 | GASSTABILISIERUNGSDUESE DI=13<br>STABILISATIE GAS NOZZLE D=13 | DIFFUSEUR GAZ DE STABILISATION D=13<br>DIFUSOR GAS DE ESTABILIZACIÓN D=13 | INIETTORE DI STABILIZZAZIONE D=13 | 1 |

| | 6XXXXXXX | DE<br>NL | FR<br>ES | IT | X |
|---|---|---|---|---|---|
| 2130 | 65312090 | GASWINKELDUESE DI=20<br>GEBOGEN GAS NOZZLE D=20 | DIFFUSEUR GAZ ANGULAIRE D=20<br>DIFUSOR GAS ANGULAR D=20 | INIETTORE GAS ANGOLARE D=20 | 1 |
| | 65312091 | GASWINKELDUESE DI=22<br>GEBOGEN GAS NOZZLE D=22 | DIFFUSEUR GAZ ANGULAIRE D=22<br>DIFUSOR GAS ANGULAR D=22 | INIETTORE GAS ANGOLARE D=22 | 1 |
| 2145 | 65312094 | VERSCHLUSSDECKEL F.GASLANZE D30<br>KAP V. GASLANS D30 | OBTURATEUR DE TUBE GAZ D30<br>OBTURADOR TUBERIA GAS D30 | OTTURATORE DI TUBO GAS D30 | 1 |
| 2150 | 65311710 | GASROHR D35X2,2X360 GRL.<br>GASBUIS D35X2,2X360 GRL. | TUBE GAZ D35X2,2X360 GRL.<br>TUBERIA GAS D35X2,2X360 GRL. | TUBO GAS D35X2,2X360 GRL. | 1 |
| | 65312092 | GASWINKELDUESE D35/24X56/245<br>GEBOGEN GAS NOZZLE D35/24X56/245 | DIFFUSEUR GAZ ANGULAIRE D35/24X56/245<br>DIFUSOR GAS ANGULAR D35/24X56/245 | INIETTORE GAS ANGOLARE D35/24X56/245 | 1 |
| | 65312093 | GASWINKELDUESE D35/27X35/245<br>GEBOGEN GAS NOZZLE D35/27X35/245 | DIFFUSEUR GAZ ANGULAIRE D35/27X35/245<br>DIFUSOR GAS ANGULAR D35/27X35/245 | INIETTORE GAS ANGOLARE D35/27X35/245 | 1 |
| | 65312095 | GASROHR D35X2,2X300<br>GASBUIS D35X2,2X300 | TUBE GAZ D35X2,2X300<br>TUBERIA GAS D35X2,2X300 | TUBO GAS D35X2,2X300 | 1 |
| 2160 | 65311702 | GASROHR D35X2,2X360<br>GASBUIS D35X2,2X360 | TUBE GAZ D35X2,2X360<br>TUBERIA GAS D35X2,2X360 | TUBO GAS D35X2,2X360 | 1 |
| | 65311882 | GASROHR D35X2,2X257 EINSTELLBAR<br>GASBUIS D35X2,2X257 VERSTELBAAR | TUBE GAZ D35X2,2X257 REGLABLE<br>TUBERIA GAS D35X2,2X257 AJUSTABLE | TUBO GAS D35X2,2X257 REGOLABILE | 1 |
| 2170 | 65311683 | GASDÜSE D30X2/D12X1,5<br>GAS VERSPREIDER D30x2/D12x1,5 | DIFFUSEUR GAZ D30X2/D12X1,5<br>DIFUSOR DE GAS D30x2/D12x1,5 | INIETTORE GAS D30x2/D12x1,5 | 1 |
| | 65312096 | GASDUESE D30X2/10X1.5X103<br>GAS NOZZLE D30X2/10X1,5X103 | DIFFUSEUR GAZ D30X2/10X1,5X103<br>DIFUSOR GAS D30X2/10X1,5X103 | INIETTORE GAS D30X2/10X1,5X103 | 1 |
| 2171 | 65312013 | GASDUESE D30X2/D12X1 L73<br>GAS NOZZLE D30X2/D12X1 L73 | DIFFUSEUR GAZ D30X2/D12X1 L73<br>DIFUSOR GAS D30X2/D12X1 L73 | INIETTORE GAS D30X2/D12X1 L73 | 1 |
| 2180 | 65311712 | GASROHR D35X2.2X45GR.<br>GASBUIS D35X2.2X45GR. | TUBE GAZ D35X2.2X45GR.<br>TUBERIA GAS D35X2.2X45GR. | TUBO GAS D35X2.2X45GR. | 1 |
| | 65312097 | GASROHR D35X2,2X220/50<br>GASBUIS D35X2,2X220/50 | TUBE GAZ D35X2,2X220/50<br>TUBERIA GAS D35X2,2X220/50 | TUBO GAS D35X2,2X220/50 | 1 |
| | 65312098 | GASROHR D35X2.2X100/35<br>GASBUIS D35X2,2X100/35 | TUBE GAZ D35X2,2X100/35<br>TUBERIA GAS D35X2,2X100/35 | TUBO GAS D35X2,2X100/35 | 1 |
| 2200 | 1728777751 | ZÜNDKABEL D6,4/D6,4 L1500 AP<br>ONTSTEKINGSKABEL D6,4/D6,4 L1500 AP | CABLE ALLUMAGE D6,4/D6,4 L1500 AP<br>CABLE ENCENDIDO D6,4/D6,4 L1500 AP | CAVO ACCENSIONE D6,4/D6,4 L1500 AP | 1 |
| 2201 | 65310724 | ZÜNDKABEL D4/SAT 72750<br>ONTSTEKINGSKABEL D4/SAT 72750 | CABLE ALLUMAGE D4/SAT 72750<br>CABLE ENCENDIDO D4/SAT 72750 | CAVO ACCENSIONE D4/SAT 72750 | 1 |
| 2210 | 65311662 | ELEKTRODENHALTER<br>ELEKTRODESTEUN | SUPPORT ELECTRODE ALLUMAGE<br>SOPORTE ELECTRODO | SUPPORTO ELETTRODO ACCENSIONE | 1 |
| 2230 | 65311690 | ZÜNDELEKTRODE D11X100 D6,4 D2,5X59 45°<br>ONTSTEKINGSPEN D11X100 D6,4 D2,5X59 45° | ELECTRODE ALLUM.D11X100 D6,4 D2,5X59 45°<br>ELECTRODO ENC. D11X100 D6,4 D2,5X59 45° | ELETTRODO ACCENS.D11X100 D6,4D2,5X59 45° | 1 |
| | 65313846 | ZÜNDELEKTRODE D11X100D6,4D2,5X150 27/90°<br>ONTSTEKINGSP. D11X100D6,4D2,5X150 27/90° | ELECTRODE ALL.D11X100D6,4D2,5X150 27/90°<br>ELECTRODO ENC.D11X100D6,4D2,5X150 27/90° | ELETTRODO ACC.D11X100D6,4D2,5X150 27/90° | 1 |
| 2250 | 65311713 | DICHTUNG/OVAL FLANSCH 210X160X2 D116<br>PAKKING/OVAL FLENS 210X160X2 D116 | JOINT/BRIDE OVALE 210X160X2 D116<br>JUNTA/OVAL BRIDA 210X160X2 D116 | GUARNIZIONE/OVAL FLANGIA 210X160X2 D116 | 1 |
| 2260 | 65312022 | ZENTRIERSTÜTZE MZE N8/EKEVO8<br>CENTREERVOORZIENING N8/EKEVO8 N8/EKEVO8 | PIED DE CENTRAGE N8/EKEVO8<br>PILAR DE CENTRAJE N8/EKEVO8 | DISPOSITIVO DI CENTRAGGIO N8/EKEVO8 | 1 |
| | 65312023 | ZENTRIERSTÜTZE MZE N9/EKEVO9<br>CENTREERVOORZIENING N8/EKEVO8 N9/EKEVO9 | PIED DE CENTRAGE N9/EKEVO9<br>PILAR DE CENTRAJE N9/EKEVO9 | DISPOSITIVO DI CENTRAGGIO N9/EKEVO9 | 1 |
| 2320 | 65312099 | ZENTRIERUNG F. DUESENGESTAENGE DM35<br>CENTREERVOORZIENING V.SPROEIERLIJNE DM35 | PIED DE CENTRAGE POUR LIGNE GICLEUR DM35<br>CENTRADO LÍNEA DE BOQUILLA DM35 | PIEDINO DI CENTRAGGIO/LINEA UGELLO DM35 | 1 |
| 2330 | 65312100 | HALTER ZENTRIERSTUECK<br>STEUN VOOR CENTREERVOORZIENING | SUPPORT PIECE DE CENTRAGE<br>SOPORTE PILAR DE CENTRAJE | SUPPORTO CENTRAGGIO | 1 |
| 2350 | 1728703262 | ZUENDELEKTROD.D11X220 D3X150 20° L150 D4<br>ONTSTEKINGSP. D11X220 D3X150 20° L150 D4 | ELECT.ALLU. D11X220 D3X150 20° L150 D4<br>ELECTROD.ENC. D11X220 D3X150 20° L150 D4 | ELETTRODO ACC.D11X220 D3X150 20° L150 D4 | 1 |
| 2360 | 65312141 | KLEMMRING F. ZENTRIERUNG<br>CENTREERRING | BAGUE DE CENTRAGE<br>ANILLO DE CENTRADO | ANELLO DI CENTRAGGIO | 1 |
| 2380 | 65310280 | DÜSENSTANGE RDG 1250D35 L860<br>SPROEIERLIJNE RDG 1250D35 L860 | LIGNE GICLEUR RDG 1250D35 L860<br>LÍNEA DE BOQUILLA RDG 1250D35 L860 | LINEA UGELLO RDG 1250D35 L860 | 1 |
| | 65311817 | DÜSENSTANGE RDG 1250D35 L760<br>SPROEIERLIJNE RDG 1250D35 L760 | LIGNE GICLEUR RDG 1250D35 L760<br>LÍNEA DE BOQUILLA RDG 1250D35 L760 | LINEA UGELLO RDG 1250D35 L760 | 1 |
| | 65311818 | DÜSENSTANGE RDG 1250D35 L960<br>SPROEIERLIJNE RDG 1250D35 L960 | LIGNE GICLEUR RDG 1250D35 L960<br>LÍNEA DE BOQUILLA RDG 1250D35 L960 | LINEA UGELLO RDG 1250D35 L960 | 1 |
| | 65311884 | D-STANGE RDG1250 L660<br>SPROEIERLIJNE RDG1250 L660 | LIGNE GICLEUR RDG1250 L660<br>LÍNEA DE BOQUILLA RDG1250 L660 | LINEA UGELLO RDG1250 L660 | 1 |
| | 65312102 | DÜSENSTANGE D35 L560<br>SPROEIERLIJNE D35 L560 | LIGNE GICLEUR D35 L560<br>LÍNEA DE BOQUILLA D35 L560 | LINEA UGELLO D35 L560 | 1 |
| 2490 | 65311435 | OELSCHLAUCH DN16 L500<br>OLIESLANG DN16 L500 | FLEXIBLE DN16 L500<br>LATIGUILLO DN16 L500 | TUBO FLESSIBILE DN16 L500 | 1 |
| 2810 | 65311406 | PUMPENAGGREGAT SMG1630-I-4-SO-IE3 30BAR<br>POMPAGGREGAAT SMG1630-I-4-SO-IE3 30BAR | GPE MOTOPOMPE SMG1630-I-4-SO-IE3 30BAR<br>GRUPO DE BOMBA SMG1630-I-4-SO-IE3 30BAR | GRUPPO MOTOPOMP.SMG1630-I-4-SO-IE3 30BAR | 1 |
| | 65312103 | PUMPENAGGREGAT SMG1631-I-4-SO-IE3 30BAR<br>POMPAGGREGAAT SMG1631-I-4-SO-IE3 30BAR | GPE MOTOPOMPE SMG1631-I-4-SO-IE3 30BAR<br>GRUPO DE BOMBA SMG1631-I-4-SO-IE3 30BAR | GRUPPO MOTOPOMP.SMG1631-I-4-SO-IE3 30BAR | 1 |
| 2815 | 65311407 | MOTOR 3KW 230/400V D28 1400 TR/MN GMP<br>MOTOR 3KW 230/400V D28 1400 TR/MN GMP | MOTEUR 3KW 230/400V D28 1400 TR/MN GMP<br>MOTOR 3KW 230/400V D28 1400 TR/MN GMP | MOTORE 3KW 230/400V D28 1400 TR/MN GMP | 1 |

| | 6XXXXXXX | DE<br>NL | FR<br>ES | IT | X |
|---|---|---|---|---|---|
| | 65312104 | MOTOR 4KW400/690V D28 1400TR/MN GMP IE3<br>MOTOR 4KW400/690V D28 1400TR/MN GMP IE3 | MOTEUR 4KW400/690V D28 1400TR/MN GMP IE3<br>MOTOR 4KW400/690V D28 1400TR/MN GMP IE3 | MOTORE 4KW400/690V D28 1400TR/MN GMP IE3 | 1 |
| 2820 | 1238795399 | KUPPLUNG D24/28 PW DM18/MW<br>KOPPELING D24/28 PW DM18/MW | ACCOUPLEMENT D24/28 PW DM18/MW<br>ACOPLAMIENTO D24/28 PW DM18/MW | GIUNTO D24/28 PW DM18/MW | 1 |
| | 1238795402 | KUPPLUNG TYP 28/38 KPL. PW DM22/MW DM28<br>KOPPELING D28/38 PW DM22/MW | ACCOUPLEMENT D28/38 PW DM22/MW<br>ACOPLAMIENTO D28/38 PW DM22/MW | GIUNTO D28/38 PW DM22/MW | 1 |
| 2821 | 1238795424 | ELASTISCHER ZAHNKRANZ F.KUPPL.24/28<br>KOPPELING D24/28 GMP | ACCOUPLEMENT D24/28 GMP<br>ACOPLAMIENTO D24/28 GMP | GIUNTO D24/28 GMP | 1 |
| | 1238795435 | ELASTISCHER ZAHNKRANZ F.KUPPL.28/38<br>KOPPELING D28/38 | ACCOUPLEMENT D28/38<br>ACOPLAMIENTO D28/38 | GIUNTO D28/38 | 1 |
| 2825 | 65311410 | OELPUMPE VBHRG I 410 SO 1700L/H<br>POMP VBHRG I 410 SO 1700L/H | POMPE FIOUL VBHRG I 410 SO 1700L/H<br>BOMBA VBHRG I 410 SO 1700L/H | POMPA VBHRG I 410 SO 1700L/H | 1 |
| | 65312105 | OELPUMPE VBHRG 2200L/H<br>POMP VBHRG 2200L/H | POMPE FIOUL VBHRG 2200L/H<br>BOMBA VBHRG 2200L/H | POMPA VBHRG 2200L/H | 1 |
| 2826 | 13019380 | DICHTUNGSSET / PUMPE D18<br>PAKKINGSET / POMP D18 | ENSEMBLE DE JOINTS / POMPE D18<br>CONJUNTO DE JUNTAS / BOMBA D18 | SET GUARNIZIONI / POMPA D18 | 1 |
| | 5788707026 | DICHTUNGSSET D22<br>PAKKINGSET D22 | ENSEMBLE DE JOINTS D22<br>CONJUNTO DE JUNTAS D22 | SET GUARNIZIONI D22 | 1 |
| 2830 | 13022666 | MAGNETVENTIL LUC 321F2523 P8 PG11 19W<br>MAGNEETKLEP LUC 321F2523 P8 PG11 19W | ELECTROVANNE LUC 321F2523 P8 PG11 19W<br>ELECTROVALVULA LUC 321F2523 P8 PG11 19W | ELETTROVALVOLA LUC 321F2523 P8 PG11 19W | 1 |
| | 13022667 | MAGNETVENTIL LUC 121F2523 P8 PG11 19W<br>MAGNEETKLEP LUC 121F2523 P8 PG11 19W | ELECTROVANNE LUC 121F2523 P8 PG11 19W<br>ELECTROVALVULA LUC 121F2523 P8 PG11 19W | ELETTROVALVOLA LUC 121F2523 P8 PG11 19W | 1 |
| 2840 | 65311572 | MANOMETER M.GLYZERINF.D 63 0-40 BAR G1/4<br>MANOMETER GLYCEROL D 63 0-40 BAR G1/4 | MANOMETRE GLYCERINE D 63 0-40 BAR G1/4<br>MANOMETRO GLICERINA D 63 0-40 BAR G1/4 | MANOMETRO GLICERINE D 63 0-40 BAR G1/4 | 1 |
| 2850 | 65311831 | DISTANZBOLZEN M6/M8X42 SW15<br>AFSTANDHOUDER M6 /M8 X 42 SW15 | ENTRETOISE M6/M8X42 SW15<br>DISTANCIADOR M6/M8X42 SW15 | DISTANZIATORE M6/M8X42 SW15 | 1 |
| 2860 | 65311412 | BEFESTIGUNGSPLATTE HYDR.-BL.-STELL. STE<br>BEVESTIGINGSPLAAT VAN DE SERVOMOTOR STE | PLATINE SERVOMOTEUR STE<br>PLACA DEL SERVOMOTOR STE | PIASTRA SERVOMOTORE STE | 1 |
| 2870 | 65311650 | STELLANTRIEB STE 4,5 Q3.51/6+KABEL L3000<br>SERVOMOTOR STE 4,5 Q3.51/6+KABEL L3000 | SERVOMOTEUR STE 4,5 Q3.51/6+CABLE L3000<br>SERVOMOTOR STE 4,5 Q3.51/6+CABLE L3000 | SERVOMOTORE STE 4,5 Q3.51/6+CAVO L3000 | 1 |
| | 65311833 | STELLANTRIEB STM 40 Q15.51/8 2NR<br>REGELMOTOR STM 40 Q15.51/8 2NR | SERVOMOTEUR STM 40 Q15.51/8 2NR<br>SERVOMOTOR STM 40 Q15.51/8 2NR | SERVOMOTORE STM 40 Q15.51/8 2NR | 1 |
| 2880 | 65312206 | DRUCKWAECHTER DSB158 F931, 3-25BAR, IP65<br>OLIEDRUKSCHAKELAAR DSB 158 F931 3-25BAR | MANOSTAT FIOUL DSB 158 F931 3-25BAR<br>PRESOSTATO GASOLEO DSB 158 F931 3-25BAR | PRESSOSTATO GASOLIO DSB 158 F931 3-25BAR | 1 |
| 2890 | 65311616 | DICHTUNG GDM 3-21<br>PAKKING GDM 3-21 | JOINT GDM 3-21<br>JUNTA GDM 3-21 | GUARNIZIONE GDM 3-21 | 1 |
| 2900 | 65311615 | GERAETESTECKDOSE GDMW 30-11 DF<br>STEKKER GDMW 30-11 DF | PRISE GDMW 30-11 DF<br>TOMA GDMW 30-11 DF | PRESA GDMW 30-11 DF | 1 |
| 2910 | 13019342 | OELSCHLAUCH M30X1,5 DN20 L=1500<br>OLIESLANG M30X1,5 DN20 L=1500 | FLEXIBLE M30X1,5 DN20 L=1500<br>LATIGUILLO M30X1,5 DN20 L=1500 | FLESSIBILE M30X1,5 DN20 L=1500 | 1 |
| | 1488436955 | OELSCHLAUCH M38X1,5 DN25 L=1500<br>OLIESLANG M38X1,5 DN25 L=1500 | FLEXIBLE M38X1,5 DN25 L=1500<br>LATIGUILLO M38X1,5 DN25 L=1500 | TUBO FLESSIBILE M38X1,5 DN25 L=1500 | 1 |
| 2920 | 65311414 | T-WINKELANSCHL.R1Z (SCHMUTZFAENG.) OVE<br>T-AANSLUITING R1Z (FILTER) OVE | RACCORD EN T R1Z (FILTRE) OVE<br>RACOR EN T R1Z (FILTRO) OVE | RACCORDO A T R1Z (FILTRO) OVE | 1 |
| | 65311578 | OELFILTER RP3/4 PN16<br>OLIEFILTER RP3/4 PN16 | FILTRE FIOUL RP3/4 PN16<br>FILTRO GASOLEO RP3/4 PN16 | FILTRO GASOLIO RP3/4 PN16 | 1 |
| 3005 | 65311613 | DICHTUNG/GASSTRECKE D162/115X2 DN100<br>PAKKING/GASSTRAAT D162/115X2 DN100 | JOINT/RAMPE GAZ D162/115X2 DN100<br>JUNTA/RAMPA DE GAS D162/115X2 DN100 | GUARNIZIONE/RAMPA GAS D162/115X2 DN100 | 1 |
| 3010 | 65311678 | GASANSCHLUSSSTÜCK DN100 / R2Z STANDARD<br>GASAANSLUITBUIS DN100-R2Z 2G1/4 PN16 | COLLECTEUR GAZ DN100 / R2" STD.<br>COLECTOR DN100-R2Z 2G1/4 PN16 | COLLETTORE GAS DN100 / R2" STD. | 1 |
| 3020 | 65311606 | GERADE-EINSCHRAUBVERSCHR.P-GEV 8LR-WD-VI<br>RECHTE AANSLUITING P-GEV 8LR-WD-VI | RACCORD DROIT P-GEV 8LR-WD-VI<br>RACOR RECTO P-GEV 8LR-WD-VI | RACCORDO DESTRO P-GEV 8LR-WD-VI | 1 |
| 3030 | 65311604 | EINSTELLB.W-VERSCHRAUBUNG P-EWV 8-L<br>GEBOGEN AANSLUITING P-EWV 8-L | RACCORD COUDE P-EWV 8-L<br>RACOR ACODADO P-EWV 8-L | RACCORDO A GOMITO P-EWV 8-L | 1 |
| 3040 | 65311579 | MESSNIPPEL R1/4Z M.DICHTUNG<br>MEETNIPPEL 1/4" MET PAKKING | PRISE DE PRESSION R1/4Z+JOINT<br>TOMA DE PRESIÓN R1/4Z+JUNTA | PRESA DI PRESSIONE R1/4Z+GUARNIZIONE | 1 |
| 3060 | 65311581 | GAS-MV VGD 20.5011 R2Z X 265 MM<br>GASKLEP VGD20 5011 RP2" | VANNE GAZ VGD20 5011 RP2"<br>VALVULA GAS VGD20 5011 RP2" | VALVOLA GAS VGD20 5011 RP2" | 1 |
| 3070 | 65107100 | STELLANTRIEB SKP25.003E2 O. ENDSCHALTER<br>REGELMOT. GAS SKP25.003E2 Z.EINDSCHALTE | SERVOMOT. GAZ SKP25.003E2 S.FIN COURSE<br>SERVOMOTOR SKP25.003 E2 SIN FIN CARRERA | SERVOMOT. GAS SKP25.003E2 S.FINE CORSA | 1 |
| 3080 | 65311585 | KABEL ANSCHLUSS AGA 62 STCK DIN L270<br>KABEL CONNECT AGA 62 STCK DIN L270 | CABLE CONNECT. AGA 62 PRISE DIN L270<br>CABLE DE CONEXION AGA 62 TOMA DIN L270 | CAVO COLLEGA AGA 62 PRESA DIN L270 | 1 |
| 3090 | 1478836180 | STELLANTRIEB SKP 15.000E2 O. ENDSCHALTER<br>REGELMOTOR GAS SKP15.000E2 Z.EINDSCHALTE | SERVOMOT.GAZ SKP15.000E2 SANS FIN COURSE<br>SERVOMO. GAS SKP15.000E2 SIN FIN CARRERA | SERVOMOT.GAS SKP15.000E2 SENZ.FINE CORSA | 1 |
| 3110 | 65311377 | FLANSCH AGF10.50 RP2<br>FLENS AGF10.50 RP2 | BRIDE AGF10.50 RP2<br>BRIDA AGF10.50 RP2 | FLANGIA AGF10.50 RP2 | 1 |
| 3120 | 65310852 | DRUCKWAECHTER GW 500 A5 (30-500MBAR)<br>GASDRUKSCHAKELAAR GW 500 A5 30-500MB | MANOSTAT GAZ GW 500 A5 30-500MB<br>PRESOSTATO GAS GW 500 A5 30-500MB | PRESSOSTATO GAS GW 500 A5 30-500MB | 1 |
| | 65323022 | GASDRUCKWAECHTER GW 150 A6 5-150 MB DIN<br>GASDRUKSCHAKELAAR GW 150 A6 5-150MB DIN | MANOSTAT GAZ GW 150 A6 5-150MB DIN<br>PRESOSTATO GAS GW 150 A6 5-150MB DIN | PRESSOSTATO GAS GW 150 A6 5-150MB DIN | 1 |
| 3130 | 65311586 | LEITUNGSDOSE VENTILANTRIEB AGA64<br>STEKKER VROUWELIJK AGA64 | PRISE FEMELLE AGA64<br>TOMA HEMBRA AGA64 | PRESA FEMMINA AGA64 | 1 |

| | 6XXXXXXX | DE<br>NL | FR<br>ES | IT | X |
|---|---|---|---|---|---|
| 3140 | 65311615 | GERAETESTECKDOSE GDMW 30-11 DF<br>STEKKER GDMW 30-11 DF | PRISE GDMW 30-11 DF<br>TOMA GDMW 30-11 DF | PRESA GDMW 30-11 DF | 1 |
| 3300 | 65311459 | GASFILTER GF80M-1616-A-1 RP2 1BAR<br>GASFILTER GF80M-1616-A-1 RP2 1BAR | FILTRE GAZ GF80M-1616-A-1 RP2 1BAR<br>FILTRO GAS GF80M-1616-A-1 RP2 1BAR | FILTRO GAS GF80M-1616-A-1 RP2 1BAR | 1 |
| 3301 | 65311361 | FILTEREINSATZ RP 1 1/2+O-RING<br>FILTERELEMENT RP 1 1/2+O-RING | ELEMENT FILTRANT RP 1 1/2+O-RING<br>ELEMENTO FILTRANTE RP 1 1/2+O-RING | ELEMENTO FILTRANTE RP 1 1/2+O-RING | 1 |
| 3505 | 65311613 | DICHTUNG/GASSTRECKE D162/115X2 DN100<br>PAKKING/GASSTRAAT D162/115X2 DN100 | JOINT/RAMPE GAZ D162/115X2 DN100<br>JUNTA/RAMPA DE GAS D162/115X2 DN100 | GUARNIZIONE/RAMPA GAS D162/115X2 DN100 | 1 |
| 3510 | 65311973 | GASANSCHLUSSSTUECK DN100 RP2Z<br>GASAANSLUITBUIS DN100 / R2 | TUBE CONNEXION GAZ DN100 / RP2"<br>COLECTOR DN100 / R2 | TUBO CONNEZZIONE GAS DN100 / Rp2" | 1 |
| 3580 | 65311840 | GASVENTIL MBC-1200-SE S82 RP2Z 5-80MBAR<br>GASKLEP MBC1200 SE S82 RP2'' 5-80 MBAR | VANNE GAZ MBC1200 SE S82 RP2'' 5-80 MBAR<br>VALVULA GAS MBC1200 SE S82 RP2'' 5-80MBA | VALVOLA GAS MBC1200 SE S82 RP2'' 5-80MBA | 1 |
| 3620 | 65313022 | FLANSCH ZU DMV-D R 2Z O.MESSNIPPEL<br>MONTAGE FLENS MBC-7/1200 DMV512/520 2" | BRIDE MBC700/1200 RP2<br>BRIDA MBC700/1200 RP2 | FLANGIA MBC700/1200 RP2 | 1 |
| 3640 | 65310852 | DRUCKWAECHTER GW 500 A5 (30-500MBAR)<br>GASDRUKSCHAKELAAR GW 500 A5 30-500MB | MANOSTAT GAZ GW 500 A5 30-500MB<br>PRESOSTATO GAS GW 500 A5 30-500MB | PRESSOSTATO GAS GW 500 A5 30-500MB | 1 |
| | 65311598 | DRUCKWAECHTER GW 150 A5 M. STECKERANSCHL<br>GASDRUKSCHAKELAAR GW 150 A5 30-150MB | MANOSTAT GAZ GW 150 A5 30-150MB<br>PRESOSTATO GAS GW 150 A5 30-150MB | PRESSOSTATO GAS GW 150 A5 30-150MB | 1 |
| 3650 | 65311615 | GERAETESTECKDOSE GDMW 30-11 DF<br>STEKKER GDMW 30-11 DF | PRISE GDMW 30-11 DF<br>TOMA GDMW 30-11 DF | PRESA GDMW 30-11 DF | 1 |
| 3700 | 13022417 | FILTEREINSATZ MBC 1200<br>FILTERELEMENT MBC 1200 | ELEMENT FILTRANT MBC 1200<br>ELEMENTO FILTRANTE MBC 1200 | ELEMENTO FILTRANTE MBC 1200 | 1 |
| 3800 | 65311459 | GASFILTER GF80M-1616-A-1 RP2 1BAR<br>GASFILTER GF80M-1616-A-1 RP2 1BAR | FILTRE GAZ GF80M-1616-A-1 RP2 1BAR<br>FILTRO GAS GF80M-1616-A-1 RP2 1BAR | FILTRO GAS GF80M-1616-A-1 RP2 1BAR | 1 |
| 3801 | 65311361 | FILTEREINSATZ RP 1 1/2+O-RING<br>FILTERELEMENT RP 1 1/2+O-RING | ELEMENT FILTRANT RP 1 1/2+O-RING<br>ELEMENTO FILTRANTE RP 1 1/2+O-RING | ELEMENTO FILTRANTE RP 1 1/2+O-RING | 1 |
| 4005 | 65311613 | DICHTUNG/GASSTRECKE D162/115X2 DN100<br>PAKKING/GASSTRAAT D162/115X2 DN100 | JOINT/RAMPE GAZ D162/115X2 DN100<br>JUNTA/RAMPA DE GAS D162/115X2 DN100 | GUARNIZIONE/RAMPA GAS D162/115X2 DN100 | 1 |
| 4010 | 65311674 | GASANSCHLUSSSTÜCK DN100/DN65<br>GASAANSLUITBUIS DN100/DN65 | COLLECTEUR GAZ DN100/DN65<br>COLECTOR DN100/DN65 | COLLETTORE GAS DN100/DN65 | 1 |
| | 65311675 | GASANSCHLUSSSTÜCK DN100 / DN80<br>GASAANSLUITBUIS DN100-DN80 PN16 | COLLECTEUR GAZ DN100/DN80<br>COLECTOR DN100-DN80 PN16 | COLLETTORE GAS DN100/DN80 | 1 |
| | 65311676 | GASANSCHLUSSSTÜCK DN100/DN100<br>GASAANSLUITBUIS DN100/DN100 | COLLECTEUR GAZ DN100/DN100<br>COLECTOR DN100/DN100 | COLLETTORE GAS DN100/DN100 | 1 |
| | 65311677 | GASANSCHLUSSSTÜCK DN100/DN125<br>GASAANSLUITBUIS DN100/DN125 | COLLECTEUR GAZ DN100/DN125<br>COLECTOR DN100/DN125 | COLLETTORE GAS DN100/DN125 | 1 |
| 4020 | 65311601 | GERADE-EINSCHRAUBSTUT.P-EGES 12L/R 1/4WD<br>RECHTE AANSLUITING P-EGES 12L/R 1/4WD | RACCORD DROIT P-EGES 12L/R 1/4WD<br>RACOR RECTO P-EGES 12L/R 1/4WD | RACCORDO DESTRO P-EGES 12L/R 1/4WD | 1 |
| 4030 | 65311608 | EINSTELLB.WINKELVERSCHR.P-EWV12L-SV<br>AANSLUITING (ELLEBOOG) P-EWV12L-SV | RACCORD COUDE P-EWV12L-SV<br>RACOR (CODO) P-EWV12L-SV | RACCORDO CURVA P-EWV12L-SV | 1 |
| 4040 | 65311605 | KREUZVERSCHR.P-KV12L<br>AANSLUITING P-KV12L | RACCORD P-KV12L<br>RACOR P-KV12L | RACCORDO P-KV12L | 1 |
| 4060 | 65311607 | STOPFEN D15/10X21 VSD 12L/S O.M.MB<br>STOP D15/10X21 VSD 12L/S O.M.MB | BOUCHON D15/10X21 VSD 12L/S O.M.MB<br>TAPÓN D15/10X21 VSD 12L/S O.M.MB | TAPPO D15/10X21 VSD 12L/S O.M.MB | 1 |
| 4070 | 65311601 | GERADE-EINSCHRAUBSTUT.P-EGES 12L/R 1/4WD<br>RECHTE AANSLUITING P-EGES 12L/R 1/4WD | RACCORD DROIT P-EGES 12L/R 1/4WD<br>RACOR RECTO P-EGES 12L/R 1/4WD | RACCORDO DESTRO P-EGES 12L/R 1/4WD | 1 |
| 4080 | 65311453 | GAS-MV VGD 40.125 DN125 PN16 X 400 MM<br>GASKLEP VGD40 125 DN125 | VANNE GAZ VGD40 125 DN125<br>VALVULA GAS VGD40 125 DN125 | VALVOLA GAS VGD40 125 DN125 | 1 |
| | 65311583 | GAS-MV VGD 40.080 DN80 X 310MM<br>GASKLEP VGD40 080 DN80 | VANNE GAZ VGD40 080 DN80<br>VALVULA GAS VGD40 080 DN80 | VALVOLA GAS VGD40 080 DN80 | 1 |
| | 65311590 | GAS-MV VGD 40.100 DN100 X 350 MM<br>GASKLEP VGD40 100, DN100X350MM | VANNE GAZ VGD40 100 DN100<br>VALVULA GAS VGD40 100 DN100 | VALVOLA GAS VGD40 100 DN100 | 1 |
| | 65323661 | GAS-MV VGD 40.065<br>GASKLEP VGD40 065 DN65 | VANNE GAZ VGD40 065 DN65<br>VÁLVULA GAS VGD40 065 DN65 | VALVOLA GAS VGD40 065 DN65 | 1 |
| 4090 | 65107100 | STELLANTRIEB SKP25.003E2 O. ENDSCHALTER<br>REGELMOT. GAS SKP25.003E2 Z.EINDSCHALTE | SERVOMOT. GAZ SKP25.003E2 S.FIN COURSE<br>SERVOMOTOR SKP25.003 E2 SIN FIN CARRERA | SERVOMOT. GAS SKP25.003E2 S.FINE CORSA | 1 |
| 4100 | 65311585 | KABEL ANSCHLUSS AGA 62 STCK DIN L270<br>KABEL CONNECT AGA 62 STCK DIN L270 | CABLE CONNECT. AGA 62 PRISE DIN L270<br>CABLE DE CONEXION AGA 62 TOMA DIN L270 | CAVO COLLEGA AGA 62 PRESA DIN L270 | 1 |
| 4110 | 1478836180 | STELLANTRIEB SKP 15.000E2 O. ENDSCHALTER<br>REGELMOTOR GAS SKP15.000E2 Z.EINDSCHALTE | SERVOMOT.GAZ SKP15.000E2 SANS FIN COURSE<br>SERVOMO. GAS SKP15.000E2 SIN FIN CARRERA | SERVOMOT.GAS SKP15.000E2 SENZ.FINE CORSA | 1 |
| 4120 | 65311611 | DICHTUNG/GASSTRECKE D127/77X2 DN65<br>PAKKING/GASSTRAAT D127/77X2 DN65 | JOINT/RAMPE GAZ D127/77X2 DN65<br>JUNTA/RAMPA DE GAS D127/77X2 DN65 | GUARNIZIONE/RAMPA GAS D127/77X2 DN65 | 1 |
| | 65311612 | DICHTUNG/GASSTRECKE D142/90X2 DN80<br>PAKKING/GASSTRAAT D142/90X2 DN80 PN16 | JOINT/RAMPE GAZ D142/90X2 DN80<br>JUNTA/RAMPA DE GAS D142/90X2 DN80 | GUARNIZIONE/RAMPA GAS D142/90X2 DN80 | 1 |
| | 65311613 | DICHTUNG/GASSTRECKE D162/115X2 DN100<br>PAKKING/GASSTRAAT D162/115X2 DN100 | JOINT/RAMPE GAZ D162/115X2 DN100<br>JUNTA/RAMPA DE GAS D162/115X2 DN100 | GUARNIZIONE/RAMPA GAS D162/115X2 DN100 | 1 |
| | 65311614 | DICHTUNG/GASSTRECKE D192/141X2 DN125<br>PAKKING/GASSTRAAT D192/141X2 DN125 | JOINT/RAMPE GAZ D192/141X2 DN125<br>JUNTA/RAMPA DE GAS D192/141X2 DN125 | GUARNIZIONE/RAMPA GAS D192/141X2 DN125 | 1 |
| 4130 | 65311586 | LEITUNGSDOSE VENTILANTRIEB AGA64<br>STEKKER VROUWELIJK AGA64 | PRISE FEMELLE AGA64<br>TOMA HEMBRA AGA64 | PRESA FEMMINA AGA64 | 1 |
| 4140 | 65311615 | GERAETESTECKDOSE GDMW 30-11 DF<br>STEKKER GDMW 30-11 DF | PRISE GDMW 30-11 DF<br>TOMA GDMW 30-11 DF | PRESA GDMW 30-11 DF | 1 |

| | 6XXXXXXX | DE<br>NL | FR<br>ES | IT | X |
|---|---|---|---|---|---|
| 4150 | 65310852 | DRUCKWAECHTER GW 500 A5 (30-500MBAR)<br>GASDRUKSCHAKELAAR GW 500 A5 30-500MB | MANOSTAT GAZ GW 500 A5 30-500MB<br>PRESOSTATO GAS GW 500 A5 30-500MB | PRESSOSTATO GAS GW 500 A5 30-500MB | 1 |
| | 65323022 | GASDRUCKWAECHTER GW 150 A6 5-150 MB DIN<br>GASDRUKSCHAKELAAR GW 150 A6 5-150MB DIN | MANOSTAT GAZ GW 150 A6 5-150MB DIN<br>PRESOSTATO GAS GW 150 A6 5-150MB DIN | PRESSOSTATO GAS GW 150 A6 5-150MB DIN | 1 |
| 4300 | 65311460 | GASFILTER GF65MF-2020-A-1 DN65 1BAR<br>GASFILTER GF65MF-2020-A-1 DN65 1BAR | FILTRE GAZ GF65MF-2020-A-1 DN65 1BAR<br>FILTRO GAS GF65MF-2020-A-1 DN65 1BAR | FILTRO GAS GF65MF-2020-A-1 DN65 1BAR | 1 |
| | 65311461 | GASFILTER GF80MF-2424-A-1 DN80 1BAR<br>GASFILTER GF80MF-2424-A-1 DN80 1BAR | FILTRE GAZ GF80MF-2424-A-1 DN80 1BAR<br>FILTRO GAS GF80MF-2424-A-1 DN80 1BAR | FILTRO GAS GF80MF-2424-A-1 DN80 1BAR | 1 |
| | 65311462 | GASFILTER GF100MF-3232-A-1 DN100 1BAR<br>GASFILTER GF100MF-3232-A-1 DN100 1BAR | FILTRE GAZ GF100MF-3232-A-1 DN100 1BAR<br>FILTRO GAS GF100MF-3232-A-1 DN100 1BAR | FILTRO GAS GF100MF-3232-A-1 DN100 1BAR | 1 |
| | 65311463 | GASFILTER GF125MF-4040-A-1 DN125 1BAR<br>GASFILTER GF125MF-4040-A-1 DN125 1BAR | FILTRE GAZ GF125MF-4040-A-1 DN125 1BAR<br>FILTRO GAS GF125MF-4040-A-1 DN125 1BAR | FILTRO GAS GF125MF-4040-A-1 DN125 1BAR | 1 |
| 4301 | 65311723 | FILTEREINSATZ GF 65 MF<br>FILTERELEMENT GF 65 MF | ELEMENT FILTRANT GF 65 MF<br>ELEMENTO FILTRANTE GF 65 MF | ELEMENTO FILTRANTE GF 65 MF | 1 |
| | 65311888 | FILTEREINSATZ GF 80 MF<br>FILTERELEMENT GF 80 MF | ELEMENT FILTRANT GF 80 MF<br>ELEMENTO FILTRANTE GF 80 MF | ELEMENTO FILTRANTE GF 80 MF | 1 |
| | 65311889 | FILTEREINSATZ GF 100 MF<br>FILTERELEMENT GF 100 MF | ELEMENT FILTRANT GF 100 MF<br>ELEMENTO FILTRANTE GF 100 MF | ELEMENTO FILTRANTE GF 100 MF | 1 |
| | 65311890 | FILTEREINSATZ GF 125 MF<br>FILTERELEMENT GF 125 MF | ELEMENT FILTRANT GF 125 MF<br>ELEMENTO FILTRANTE GF 125 MF | ELEMENTO FILTRANTE GF 125 MF | 1 |
| 4505 | 65311613 | DICHTUNG/GASSTRECKE D162/115X2 DN100<br>PAKKING/GASSTRAAT D162/115X2 DN100 | JOINT/RAMPE GAZ D162/115X2 DN100<br>JUNTA/RAMPA DE GAS D162/115X2 DN100 | GUARNIZIONE/RAMPA GAS D162/115X2 DN100 | 1 |
| 4510 | 65311674 | GASANSCHLUSSSTÜCK DN100/DN65<br>GASAANSLUITBUIS DN100/DN65 | COLLECTEUR GAZ DN100/DN65<br>COLECTOR DN100/DN65 | COLLETTORE GAS DN100/DN65 | 1 |
| | 65311675 | GASANSCHLUSSSTÜCK DN100 / DN80<br>GASAANSLUITBUIS DN100-DN80 PN16 | COLLECTEUR GAZ DN100/DN80<br>COLECTOR DN100-DN80 PN16 | COLLETTORE GAS DN100/DN80 | 1 |
| | 65311676 | GASANSCHLUSSSTÜCK DN100/DN100<br>GASAANSLUITBUIS DN100/DN100 | COLLECTEUR GAZ DN100/DN100<br>COLECTOR DN100/DN100 | COLLETTORE GAS DN100/DN100 | 1 |
| 4520 | 65311601 | GERADE-EINSCHRAUBSTUT.P-EGES 12L/R 1/4WD<br>RECHTE AANSLUITING P-EGES 12L/R 1/4WD | RACCORD DROIT P-EGES 12L/R 1/4WD<br>RACOR RECTO P-EGES 12L/R 1/4WD | RACCORDO DESTRO P-EGES 12L/R 1/4WD | 1 |
| 4530 | 65311344 | T-VERSCHRAUBUNG P-TV 12 L<br>T-STUK P-TV 12 L | RACCORD EN T P-TV 12 L<br>RACOR EN T P-TV 12 L | RACCORDO A T P-TV 12 L | 1 |
| 4560 | 65311607 | STOPFEN D15/10X21 VSD 12L/S O.M.MB<br>STOP D15/10X21 VSD 12L/S O.M.MB | BOUCHON D15/10X21 VSD 12L/S O.M.MB<br>TAPÓN D15/10X21 VSD 12L/S O.M.MB | TAPPO D15/10X21 VSD 12L/S O.M.MB | 1 |
| 4580 | 65311844 | GASVENTIL MBC-1900-SE DN65 40-80MBAR<br>GASKLEP MBC1900 SE DN65 40-80MBAR | VANNE GAZ MBC1900 SE DN65 40-80MBAR<br>VALVULA GAS MBC1900SE DN65 40-80MBAR | VALVOLA GAS MBC1900 SE DN65 40-80MBAR | 1 |
| | 65311845 | GASVENTIL MBC-3100-SE DN80 40-80MBAR<br>GASKLEP MBC3100 SE DN80 40-80 MBAR | VANNE GAZ MBC3100 SE DN80 40-80 MBAR<br>VALVULA GAS MBC3100 SE DN80 40-80 MBAR | VALVOLA GAS MBC3100 SE DN80 40-80 MBAR | 1 |
| | 65311846 | GASVENTIL MBC-5000-SE DN100 40-80MBAR<br>GASKLEP MBC5000 SE DN100 40-80 MBAR | VANNE GAZ MBC5000 SE DN100 40-80 MBAR<br>VALVULA GAS MBC5000 SE DN100 40-80 MBAR | VALVOLA GAS MBC5000 SE DN100 40-80 MBAR | 1 |
| 4620 | 65311611 | DICHTUNG/GASSTRECKE D127/77X2 DN65<br>PAKKING/GASSTRAAT D127/77X2 DN65 | JOINT/RAMPE GAZ D127/77X2 DN65<br>JUNTA/RAMPA DE GAS D127/77X2 DN65 | GUARNIZIONE/RAMPA GAS D127/77X2 DN65 | 1 |
| | 65311612 | DICHTUNG/GASSTRECKE D142/90X2 DN80<br>PAKKING/GASSTRAAT D142/90X2 DN80 PN16 | JOINT/RAMPE GAZ D142/90X2 DN80<br>JUNTA/RAMPA DE GAS D142/90X2 DN80 | GUARNIZIONE/RAMPA GAS D142/90X2 DN80 | 1 |
| | 65311613 | DICHTUNG/GASSTRECKE D162/115X2 DN100<br>PAKKING/GASSTRAAT D162/115X2 DN100 | JOINT/RAMPE GAZ D162/115X2 DN100<br>JUNTA/RAMPA DE GAS D162/115X2 DN100 | GUARNIZIONE/RAMPA GAS D162/115X2 DN100 | 1 |
| 4640 | 65310852 | DRUCKWAECHTER GW 500 A5 (30-500MBAR)<br>GASDRUKSCHAKELAAR GW 500 A5 30-500MB | MANOSTAT GAZ GW 500 A5 30-500MB<br>PRESOSTATO GAS GW 500 A5 30-500MB | PRESSOSTATO GAS GW 500 A5 30-500MB | 1 |
| | 65323022 | GASDRUCKWAECHTER GW 150 A6 5-150 MB DIN<br>GASDRUKSCHAKELAAR GW 150 A6 5-150MB DIN | MANOSTAT GAZ GW 150 A6 5-150MB DIN<br>PRESOSTATO GAS GW 150 A6 5-150MB DIN | PRESSOSTATO GAS GW 150 A6 5-150MB DIN | 1 |
| 4650 | 65311615 | GERAETESTECKDOSE GDMW 30-11 DF<br>STEKKER GDMW 30-11 DF | PRISE GDMW 30-11 DF<br>TOMA GDMW 30-11 DF | PRESA GDMW 30-11 DF | 1 |
| 4800 | 65311460 | GASFILTER GF65MF-2020-A-1 DN65 1BAR<br>GASFILTER GF65MF-2020-A-1 DN65 1BAR | FILTRE GAZ GF65MF-2020-A-1 DN65 1BAR<br>FILTRO GAS GF65MF-2020-A-1 DN65 1BAR | FILTRO GAS GF65MF-2020-A-1 DN65 1BAR | 1 |
| | 65311461 | GASFILTER GF80MF-2424-A-1 DN80 1BAR<br>GASFILTER GF80MF-2424-A-1 DN80 1BAR | FILTRE GAZ GF80MF-2424-A-1 DN80 1BAR<br>FILTRO GAS GF80MF-2424-A-1 DN80 1BAR | FILTRO GAS GF80MF-2424-A-1 DN80 1BAR | 1 |
| | 65311462 | GASFILTER GF100MF-3232-A-1 DN100 1BAR<br>GASFILTER GF100MF-3232-A-1 DN100 1BAR | FILTRE GAZ GF100MF-3232-A-1 DN100 1BAR<br>FILTRO GAS GF100MF-3232-A-1 DN100 1BAR | FILTRO GAS GF100MF-3232-A-1 DN100 1BAR | 1 |
| 4801 | 65311723 | FILTEREINSATZ GF 65 MF<br>FILTERELEMENT GF 65 MF | ELEMENT FILTRANT GF 65 MF<br>ELEMENTO FILTRANTE GF 65 MF | ELEMENTO FILTRANTE GF 65 MF | 1 |
| | 65311888 | FILTEREINSATZ GF 80 MF<br>FILTERELEMENT GF 80 MF | ELEMENT FILTRANT GF 80 MF<br>ELEMENTO FILTRANTE GF 80 MF | ELEMENTO FILTRANTE GF 80 MF | 1 |
| | 65311889 | FILTEREINSATZ GF 100 MF<br>FILTERELEMENT GF 100 MF | ELEMENT FILTRANT GF 100 MF<br>ELEMENTO FILTRANTE GF 100 MF | ELEMENTO FILTRANTE GF 100 MF | 1 |
| 5001 | 1458645325 | DUESE BER 350KG 55° CBM<br>SPROEIER BER 350KG 55° CBM | GICLEUR BER 350KG 55° CBM<br>BOQUILLA BER 350KG 55° CBM | UGELLO BER 350KG 55° CBM | 1 |
| | 1458645347 | DUESE BER 400KG 55° CBM<br>SPROEIER BER 400KG 55° CBM | GICLEUR BER 400KG 55° CBM<br>BOQUILLA BER 400KG 55° CBM | UGELLO BER 400KG 55° CBM | 1 |
| | 1458698846 | DUESE DZ1000 750KG 80° M14 1-5<br>SPROEIER DZ1000 750KG 80° M14 1-5 | GICLEUR DZ1000 750KG 80° M14 1-5<br>BOQUILLA DZ1000 750KG 80° M14 1-5 | UGELLO DZ1000 750KG 80° M14 1-5 | 1 |
| | 1458698891 | DUESE DZ1000 1000KG 80° M14 1-5<br>SPROEIER DZ1000 1000KG 80° M14 1-5 | GICLEUR DZ1000 1000KG 80° M14 1-5<br>BOQUILLA DZ1000 1000KG 80° M14 1-5 | UGELLO DZ1000 1000KG 80° M14 1-5 | 1 |

| | 6XXXXXXX | DE<br>NL | FR<br>ES | IT | X |
|---|---|---|---|---|---|
| | 65311201 | DUESE DZ1000 950KG 80° M14 1-5<br>SPROEIER DZ1000 950KG 80° M14 1-5 | GICLEUR DZ1000 950KG 80° M14 1-5<br>BOQUILLA DZ1000 950KG 80° M14 1-5 | UGELLO DZ1000 950KG 80° M14 1-5 | 1 |
| | 65312421 | DUESE DZ1000 800KG 80° M14 1-5<br>SPROEIER DZ1000 800KG 80° M14 1-5 | GICLEUR DZ1000 800KG 80° M14 1-5<br>BOQUILLA DZ1000 800KG 80° M14 1-5 | UGELLO DZ1000 800KG 80° M14 1-5 | 1 |
| | 65313182 | DUESE BER 275KG 55° CBM<br>SPROEIER BER 275KG 55° CBM | GICLEUR BER 275KG 55° CBM<br>BOQUILLA BER 275KG 55° CBM | UGELLO BER 275KG 55° CBM | 1 |
| | 65313183 | DUESE BER 300KG 55° CBM<br>SPROEIER BER 300KG 55° CBM | GICLEUR BER 300KG 55° CBM<br>BOQUILLA BER 300KG 55° CBM | UGELLO BER 300KG 55° CBM | 1 |
| | 65313184 | DUESE BER 450KG 55° CBM<br>SPROEIER BER 450KG 55° CBM | GICLEUR BER 450KG 55° CBM<br>BOQUILLA BER 450KG 55° CBM | UGELLO BER 450KG 55° CBM | 1 |
| | 65313185 | DUESE BER 500KG 55° CBM<br>SPROEIER BER 500KG 55° CBM | GICLEUR BER 500KG 55° CBM<br>BOQUILLA BER 500KG 55° CBM | UGELLO BER 500KG 55° CBM | 1 |
| | 65313186 | DUESE BER 600KG 55° CBM<br>SPROEIER BER 600KG 55° CBM | GICLEUR BER 600KG 55° CBM<br>BOQUILLA BER 600KG 55° CBM | UGELLO BER 600KG 55° CBM | 1 |
| | 65313190 | DUESE DZ1000 900KG 80° M14 1-5<br>SPROEIER DZ1000 900KG 80° M14 1-5 | GICLEUR DZ1000 900KG 80° M14 1-5<br>BOQUILLA DZ1000 900KG 80° M14 1-5 | UGELLO DZ1000 900KG 80° M14 1-5 | 1 |
| | 65313851 | DUESE BER 550KG 55° CBM<br>SPROEIER BER 550KG 55° CBM | GICLEUR BER 550KG 55° CBM<br>BOQUILLA BER 550KG 55° CBM | UGELLO BER 550KG 55° CBM | 1 |
| | 65313852 | DUESE DZ1000 550KG 80° M14 1-5<br>SPROEIER DZ1000 550KG 80° M14 1-5 | GICLEUR DZ1000 550KG 80° M14 1-5<br>BOQUILLA DZ1000 550KG 80° M14 1-5 | UGELLO DZ1000 550KG 80° M14 1-5 | 1 |
| | 65313853 | DUESE DZ1000 700KG 80° M14 1-5<br>SPROEIER DZ1000 700KG 80° M14 1-5 | GICLEUR DZ1000 700KG 80° M14 1-5<br>BOQUILLA DZ1000 700KG 80° M14 1-5 | UGELLO DZ1000 700KG 80° M14 1-5 | 1 |
| | 65313854 | DUESE DZ1000 650KG 80° M14 1-5<br>SPROEIER DZ1000 650KG 80° M14 1-5 | GICLEUR DZ1000 650KG 80° M14 1-5<br>BOQUILLA DZ1000 650KG 80° M14 1-5 | UGELLO DZ1000 650KG 80° M14 1-5 | 1 |
| | 65313855 | DUESE DZ1000 850KG 80° M14 1-5<br>SPROEIER DZ1000 850KG 80° M14 1-5 | GICLEUR DZ1000 850KG 80° M14 1-5<br>BOQUILLA DZ1000 850KG 80° M14 1-5 | UGELLO DZ1000 850KG 80° M14 1-5 | 1 |
| 5002 | 65312447 | FEUERUNGSAUT. BT340 BASISEINSTELL.<br>BRANDERAUT. BT340 BASIS AFSTELLING | COFFRET BT340 REGLAGE DE BASE<br>PROGRAMADOR BT340 CONFIGUR. BÁSICA | APPARECCH. BT340 REGOL. BASE | 1 |
| | 65312450 | FEUERUNGSAUT. BT340 SPEZIAL EINSTELL.<br>BRANDERAUT. BT340 SPECIAL. AFSTELLING | COFFRET BT340 REGLAGE SPECIFIQUE<br>PROGRAMADOR BT340 CONFIG. ESPECÍFICA | APPARECCH. BT340 REGOL. SPEZIAL. | 1 |
| | 65312455 | FEUERUNGSAUTOM. BT340 GL-EF3+FQ.UM<br>BRANDERAUT. BT340 GL-EF3+FQ.OMV. | COFFRET BT340 GL-EF3+REG.FRQ.<br>PROGRAMAD.BT340 GL-EF3+CONV.FREQ. | APPARECCHIAT.BT340 GL-EF3+REG.FQ | 1 |
| 5010 | 65311362 | PRUEFBRENNER M.DRUCKKNOPFHAHN PB2<br>PROEFBRANDER MET DRUKKNOP PB2 | BRULEUR ESSAI AVEC B. POUSSOIR PB2<br>QUEMADOR DE PRUEBA CON PULSADOR PB2 | BRUCIATORE DI PROVA CON PULSANTE PB2 | 1 |
| 5020 | 65311918 | VSM100 (LSB-M 667R0200-1)<br>VSM100-MODULE (LSB-M 667R0200-1) | MODULE VSM100 (LSB-M 667R0200-1)<br>MÓDULO VSM100 (LSB-M 667R0200-1) | MODULO VSM100 (LSB-M 667R0200-1) | 1 |
| 5042 | 65311940 | RELAIS FIN 38.61.8.240.5060 KLL 1W FZ<br>RELAIS FIN 38.61.8.240.5060 KLL 1W FZ | RELAIS FIN 38.61.8.240.5060 KLL 1W FZ<br>RELE FIN 38.61.8.240.5060 KLL 1W FZ | RELE FIN 38.61.8.240.5060 KLL 1W FZ | 1 |
| 5070 | 65311937 | DURCHGANGSKLEMME WAGO (GRAU) 2010-1301<br>DOORVERBINDINGSKLEM WAGO GRIJS 2010-1301 | BORNE DE JONCTION WAGO (GRIS) 2010-1301<br>BORNE DE PASO WAGO (GRIS) 2010-1301 | MORSETTO PASSANTE WAGO (GRIGIO)2010-1301 | 1 |
| | 65311938 | DURCHGANGSKLEMME WAGO (GRAU) 2016-1301<br>DOORVERBINDINGSKLEM WAGO GRIJS 2016-1301 | BORNE DE JONCTION WAGO (GRIS) 2016-1301<br>BORNE DE PASO WAGO (GRIS) 2016-1301 | MORSETTO PASSANTE WAGO (GRIGIO)2016-1301 | 1 |
| 5071 | 65311939 | DURCHGANGSKLEMME WAGO (PE) 2016-1307<br>DOORVERBINDINGSKLEM WAGO (PE) 2016-1307 | BORNE DE JONCTION WAGO (TERRE) 2016-1307<br>BORNE DE PASO WAGO (PE) 2016-1307 | MORSETTO PASSANTE WAGO (TERRA) 2016-1307 | 1 |
| 5080 | 65311793 | MOTORSCHUETZ SCH D 3-4KW LC1D09P7<br>CONTACT MOTOR SCH D 3-4kW LC1D09P7 | CONTACTEUR MOTEUR SCH D 3-4kW LC1D09P7<br>CONTACTOR DE MOTOR SCH D 3-4kW LC1D09P7 | CONTATTORE MOTORE SCH D 3-4kW LC1D09P7 | 1 |
| 5085 | 65311794 | MOTORSCHUTZSCHALTER 3-4KW GV2ME14<br>VERMOGENSCHAKEL. MOTOR 3-4KW GV2ME14 | DISJONCTEUR MOTEUR 3-4KW GV2ME14<br>INTERRUPTOR MOTOR 3-4KW GV2ME14 | INTERRUTTORE MOTORE 3-4KW GV2ME14 | 1 |
| 5086 | 65311795 | HILFSSCHALTER GVAE11<br>HULPSCHAKELAAR GVAE11 | CONTACT AUXILIAIRE GVAE11<br>INTERRUPTOR AUXILIAR GVAE11 | INTERRUTTORE AUSILIARIO GVAE11 | 1 |
| 5087 | 65311941 | FREQ.UMRICHTER ACH550 15KW<br>FREQ.OMVORMER ACH550 15KW | VARIATEUR FREQ. ACH550 15KW<br>CONVERTIDORES FREQ. ACH550 15KW | VARIATORE FREQ. ACH550 15KW | 1 |
| | 65311942 | FREQ.UMRICHTER ACH550 22KW<br>FREQ.OMVORMER ACH550 22KW | VARIATEUR FREQ. ACH550 22KW<br>CONVERTIDORES FREQ. ACH550 22KW | VARIATORE FREQ. ACH550 22KW | 1 |
| | 65312014 | FREQUENZUMRICHTER ACH550 - 11kW<br>FREQUENTIEOMVORMER ACH550 - 11kW | VARIATEUR DE FREQUENCE ACH550 - 11kW<br>CONVERTIDOR DE FRECUENCIAS ACH550 - 11kW | CONVERTITORE DI FREQUENZA ACH550 - 11kW | 1 |
| | 65312021 | FREQ.UMRICHTER ACH550 18,5KW<br>FREQ.OMVORMER ACH550 18,5KW | VARIATEUR FREQ. ACH550 18,5KW<br>CONVERTIDORES FREQ. ACH550 18,5KW | VARIATORE FREQ. ACH550 18,5KW | 1 |
| 5090 | 65311943 | LUEFTER FREQUENZUMRICHTER<br>HOOFDVENTILATOR FREQUENTIEOMVORMER | VENTILATEUR CONVERTISSEUR DE FREQUENCE<br>VENTILADOR DEL CONVERTIDOR DE FRECUENCIA | VENTILATORE CONVERTITORE DI FREQUENZA | 1 |
| 5091 | 65311944 | FILTER GITTER 177X177 EFA 200R5/ELDON<br>FILTER VENTIL. 177X177 EFA 200R5/ELDON | FILTRE AERAT. 177X177 EFA 200R5/ELDON<br>FILTRO VENTIL. 177X177 EFA 200R5 /ELDON | FILTRO AERAZ. 177X177 EFA 200R5 /ELDON | 1 |
| 5100 | 65312285 | REGELWELLE 8.0 LINKSVERS. GR.2<br>REGELING AS 8.0 (CCW) GR.2 | ARBRE DE REGULATION 8.0(ROT.GAUCHE) GR.2<br>ARBOL DE REGULAC. 8.0(ROT.IZQUIERDA)GR.2 | ALBERO DI REGOLAZ. 8.0(ROT.SINISTRA)GR.2 | 1 |
| | 65312292 | REGELWELLE 7.0 LINKSVERS. GR.2<br>REGELING AS 7.0 (CCW) GR.2 | ARBRE DE REGULATION 7.0(ROT.GAUCHE) GR.2<br>ARBOL DE REGULAC. 7.0(ROT.IZQUIERDA)GR.2 | ALBERO DI REGOLAZ. 7.0(ROT.SINISTRA)GR.2 | 1 |
| | 65312293 | REGELWELLE 9.0 LINKSVERS. GR.2<br>REGELING AS 9.0 (CCW) GR.2 | ARBRE DE REGULATION 9.0(ROT.GAUCHE) GR.2<br>ARBOL DE REGULAC. 9.0(ROT.IZQUIERDA)GR.2 | ALBERO DI REGOLAZ. 9.0(ROT.SINISTRA)GR.2 | 1 |
| | 65312302 | REGELWELLE 5.0 LINKSVERS.<br>REGELING AS 5.0 (CCW) | ARBRE DE REGULATION 5.0 (ROT. GAUCHE)<br>ARBOL DE REGULACION 5.0 (ROT. IZQUIERDA) | ALBERO DI REGOLAZIONE 5.0 (ROT.SINISTRA) | 1 |
| | 65312303 | REGELWELLE 6.0 LINKSVERS.<br>REGELING AS 6.0 (CCW) | ARBRE DE REGULATION 6.0 (ROT. GAUCHE)<br>ARBOL DE REGULACION 6.0 (ROT. IZQUIERDA) | ALBERO DI REGOLAZIONE 6.0 (ROT.SINISTRA) | 1 |

| | 6XXXXXXX | DE<br>NL | FR<br>ES | IT | X |
|---|---|---|---|---|---|
| | 65312304 | REGELWELLE 7.0 LINKSVERS.<br>REGELING AS 7.0 (CCW) | ARBRE DE REGULATION 7.0 (ROT. GAUCHE)<br>ARBOL DE REGULACION 7.0 (ROT. IZQUIERDA) | ALBERO DI REGOLAZIONE 7.0 (ROT.SINISTRA) | 1 |
| | 65312305 | REGELWELLE 8.0 LINKSVERS.<br>REGELING AS 8.0 (CCW) | ARBRE DE REGULATION 8.0 (ROT. GAUCHE)<br>ARBOL DE REGULACION 8.0 (ROT. IZQUIERDA) | ALBERO DI REGOLAZIONE 8.0 (ROT.SINISTRA) | 1 |
| 5110 | 65311439 | KLEMMLEISTE WAGO STRG.N6-9 GL-E/F3 TB<br>KLEMMENSTROOK WAGO STRG.N6-9 GL-E/F3 TB | BORNIER WAGO STRG.N6-9 GL-E/F3 TB<br>REGLETA BORNES WAGO STRG.N6-9 GL-E/F3 TB | MORSETTIERA WAGO STRG.N6-9 GL-E/F3 TB | 1 |
| 5111 | 65311440 | ICOTEK EMV STECKFUSS 3-6MM KLEMMLEISTE<br>CONNECTORHOUDER 3-6 MM | SUPPORT CONNECTEUR 3-6MM<br>SOPORTE DE CONECTOR 3-6 MM | SUPPORTO CONNETTORE 3-6MM | 1 |
| 5112 | 65311441 | DURCHGANGSKLEMME WAGO (ORANGE) 2001-1202<br>DOORVERBINDINGSKLEM WAGO ORANGE2001-1202 | BORNE DE JONCTION WAGO (ORANGE)2001-1202<br>BORNE DE PASO WAGO (NARANJA) 2001-1202 | MORSETTO PASSANTE WAGO(ARANCIO)2001-1202 | 1 |
| 5113 | 65311442 | ICOTEK EMV STECKFUSS 6-8MM KLEMMLEISTE<br>CONNECTORHOUDER 6-8 MM | SUPPORT CONNECTEUR 6-8MM<br>SOPORTE DE CONECTOR 6-8 MM | SUPPORTO CONNETTORE 6-8MM | 1 |
| 5114 | 65311443 | DURCHGANGSKLEMME WAGO (GRAU) 2001-1201<br>DOORVERBINDINGSKLEM WAGO GRIJS 2001-1201 | BORNE DE JONCTION WAGO (GRIS) 2001-1201<br>BORNE DE PASO WAGO (GRIS) 2001-1201 | MORSETTO PASSANTE WAGO (GRIGIO)2001-1201 | 1 |
| 5115 | 65311444 | DURCHGANGSKLEMME WAGO (PE) 2001-1207<br>DOORVERBINDINGSKLEM WAGO (PE) 2001-1207 | BORNE DE JONCTION WAGO (TERRE) 2001-1207<br>BORNE DE PASO WAGO (PE) 2001-1207 | MORSETTO PASSANTE WAGO (TERRA) 2001-1207 | 1 |
| 5116 | 65311445 | DURCHGANGSKLEMME WAGO (PE) 2001-1407<br>DOORVERBINDINGSKLEM WAGO (PE) 2001-1407 | BORNE DE JONCTION WAGO (TERRE) 2001-1407<br>BORNE DE PASO WAGO (PE) 2001-1407 | MORSETTO PASSANTE WAGO (TERRA) 2001-1407 | 1 |
| 5117 | 65311446 | WAG BETAETIGUNGSWERKZEUG 2009-309<br>BEDIENINGSGEREEDSCHAP WAG 2009-309 | OUTIL DE MANOEUVRE WAG 2009-309<br>HERRAMIENTA D.ACCIONAM. WAG 2009-309 | DISPOSITIVO DI MANOVRA WAG 2009-309 | 1 |
| 5118 | 65311447 | DURCHGANGSKLEMME WAGO (NEUTRAL)2001-1404<br>DOORVERBINDINGSKLEM WAGO (N) 2001-1404 | BORNE DE JONCTION WAGO (NEUTRE)2001-1404<br>BORNE DE PASO WAGO (NEUTRO) 2001-1404 | MORSETTO PASSANTE WAGO (NEUTRO)2001-1404 | 1 |
| 5119 | 65311448 | DURCHGANGSKLEMME WAGO (NEUTRAL)2001-1204<br>DOORVERBINDINGSKLEM WAGO (N) 2001-1204 | BORNE DE JONCTION WAGO (NEUTRE)2001-1204<br>BORNE DE PASO WAGO (NEUTRO) 2001-1204 | MORSETTO PASSANTE WAGO (NEUTRO)2001-1204 | 1 |
| 5120 | 65311449 | DURCHGANGSKLEMME WAGO (GRAU) 2001-1401<br>DOORVERBINDINGSKLEM WAGO GRIJS 2001-1401 | BORNE DE JONCTION WAGO (GRIS) 2001-1401<br>BORNE DE PASO WAGO (GRIS) 2001-1401 | MORSETTO PASSANTE WAGO (GRIGIO)2001-1401 | 1 |
| 5121 | 65311450 | PRÜFLAST ETAMATIC 663R1199<br>TESTLADING ETAMATIC 663R1199 | CHARGE D'ESSAI ETAMATIC 663R1199<br>CARGA DE PRUEBA ETAMATIC 663R1199 | CARICA DI TEST ETAMATIC 663R1199 | 1 |
| 5122 | 65311451 | KABELVERSCHRAUBUNG M16<br>PAKKINGBUS M16 | PRESSE-ETOUPE M16<br>PRENSAESTOPAS M16 | PREMISTOPPA M16 | 1 |
| | 65311758 | KABELVERSCHRAUBUNG M20<br>PAKKINGBUS M20 | PRESSE-ETOUPE M20<br>PRENSAESTOPAS M20 | PREMISTOPPA M20 | 1 |
| | 65311759 | KABELVERSCHRAUBUNG M25<br>PAKKINGBUS M25 | PRESSE-ETOUPE M25<br>PRENSAESTOPAS M25 | PREMISTOPPA M25 | 1 |
| 5123 | 65311786 | DEMONTAGEWERKZEUG KABELVER. CLICK M16<br>CLIC TOOL M16 | OUTIL CLIC M16<br>CLIC TOOL M16 | CLIC TOOL M16 | 1 |
| | 65311787 | DEMONTAGEWERKZEUG KABELVER. CLICK M20<br>CLIC TOOL M20 | OUTIL CLIC M20<br>CLIC TOOL M20 | CLIC TOOL M20 | 1 |
| | 65311788 | DEMONTAGEWERKZEUG KABELVER. CLICK M25<br>CLIC TOOL M25 | OUTIL CLIC M25<br>CLIC TOOL M25 | CLIC TOOL M25 | 1 |
| 5150 | 1758811789 | NETZTEIL ML30.100 - 24V DC<br>VOEDING ML30.100-24V DC | BLOC D'ALIMENTATION ML30.100-24V DC<br>FUENTE DE ALIMENTACION ML30.100-24V DC | ALIMENTATORE ML30.100-24V DC | 1 |
| 5300 | 65114033 | REGLER RWF 55.50A9<br>REGELAAR RWF 55.50A9 | REGULATEUR RWF 55.50A9<br>REGULADOR RWF 55.50A9 | REGOLATORE RWF 55.50A9 | 1 |

| | 6XXXXXXX | RU<br>TR | PT | PL | X |
|---|---|---|---|---|---|
| 1010 | 65311967 | ФЛАНЕЦ 37X62X15 D12 KFL001<br>FLANŞI 37X62X15 D12 KFL001 | FLANGE 37X62X15 D12 KFL001 | KOŁNIERZ 37X62X15 D12 KFL001 | 1 |
| 1015 | 65311657 | ИНДИКАТОР ВОЗДУШНОЙ ЗАСЛОНКИ<br>HAVA KANALI GÖSTERGESI | INDICADOR DE FLAP DE AR | WSKAŹNIK KLAPY POWIETRZA | 1 |
| 1020 | 65311689 | ДЕРЖАТЕЛЬ СЕРВОДВИГАТЕЛЬ/ВОЗДУШНАЯ ЗАСЛ.<br>DESTEĞI SERVOMOTOR / HAVA KLAPESI | SUPORTE SERVOMOTOR / FLAP DE AR | WSPORNIK SERWOMOTOR/PRZEPUSTNICA POWIET. | 1 |
| 1030 | 65311650 | СЕРВОДВИГАТЕ STE4,5 Q3.51/6+КАБЕЛЬ L3000<br>SERVOMOTOR STE 4,5 Q3.51/6+KABLOSU L3000 | SERVOMOTOR STE 4,5 Q3.51/6+CABO L3000 | SERWOMOTOR STE 4,5 Q3.51/6+PRZEWÓD L3000 | 1 |
| | 65311833 | СЕРВОДВИГАТЕЛЬ STM 40 Q15.51/8 2NR<br>SERVOMOTOR STM 40 Q15.51/8 2NR | SERVOMOTOR STM 40 Q15.51/8 2NR | SERWOMOTOR STM 40 Q15.51/8 2NR | 1 |
| 1035 | 1658418384 | ДАТЧИК NAMUR D14<br>SENSÖR NAMUR D14 | SENSOR NAMUR D14 | CZUJNIK NAMUR D14 | 1 |
| 1040 | 65311665 | ВОЗДУХОЗАБОРНИК D332x127,5<br>HAVA GIRIŞ D332x127,5 | ENTRADA DE AR D332x127,5 | WLOT POWIETRZA D332x127,5 | 1 |
| | 65311672 | ВОЗДУХОЗАБОРНИК D318x134<br>HAVA GIRIŞ D318x134 | ENTRADA DE AR D318x134 | WLOT POWIETRZA D318x134 | 1 |
| | 65311673 | ВОЗДУХОЗАБОРНИК D288x127<br>HAVA GIRIŞ D288x127 | ENTRADA DE AR D288x127 | WLOT POWIETRZA D288x127 | 1 |
| | 65311715 | ВОЗДУХОЗАБОРНИК D344x126<br>HAVA GIRIŞ D344x126 | ENTRADA DE AR D344x126 | WLOT POWIETRZA D344x126 | 1 |
| 1050 | 1180603227 | БЕСЦВЕТ. ГЛАЗОК ДЛЯ КОНТРОЛЯ ПЛАМЕНИ<br>RENKSİZ GÖZETLEME CAMI D55X21 | VIGIA INCOLOR D55X21 | WZIERNIK BEZBARWNA D55X21 | 1 |
| 1060 | 1188052260 | ГЛАЗОК ДЛЯ КОНТРОЛЯ ПЛАМЕНИ КОРОБ<br>KAPAK/GÖZETLEME CAMI D55X61 | TAMPA VIGIA D55X61 | POKRYWA/WZIERNIK D55X61 | 1 |
| 1070 | 1180559591 | ГАЙКА. ДЛЯ КОНТРОЛЯ ПЛАМЕНИ M48X1,5 SW60<br>SOMUN/GÖZETLEME CAMI M48X1,5 SW60 | PARAFUSO VIGIA M48X1,5 SW60 | NAKRĘTKA/WZIERNIK M48X1,5 SW60 | 1 |
| 1080 | 65311670 | РАБОЧЕЕ КОЛЕСО D556/320X86 D42<br>TÜRBIN D556/320X86 D42 | TURBINA D556/320X86 D42 | WIMIK D556/320X86 D42 | 1 |
| | 65311716 | РАБОЧЕЕ КОЛЕСО D533/290X83 D42<br>TÜRBIN D533/290X83 D42 | TURBINA D533/290X83 D42 | WIMIK D533/290X83 D42 | 1 |
| | 65311717 | РАБОЧЕЕ КОЛЕСО D590/334X92 D42<br>TÜRBIN D590/334X92 D42 | TURBINA D590/334X92 D42 | WIMIK D590/334X92 D42 | 1 |
| | 65311718 | РАБОЧЕЕ КОЛЕСО D600/346X93 D48<br>TÜRBIN D600/346X93 D48 | TURBINA D600/346X93 D48 | WIMIK D600/346X93 D48 | 1 |
| 1090 | 65311471 | ТРАНСФОРМАТОР РОЗЖИГА EBI 1X11 230<br>ATEŞLEME TRAFO. EBI 1X11 230V | TRANSFO IGNIÇÃO EBI 1X11 230V | TRANSFO ZAPŁONOWY EBI 1X11 230V | 1 |
| 1091 | 1738733651 | ТРАНСФО РОЗЖИГА ZA20 140 E21 REP.ZM20/14<br>ATEŞLEME TRAFO.ZA 20 140 E21 REP.ZM20/14 | TRANSFO IGNIÇÃO ZA20 140 E21 REP.ZM20/14 | TRANSFO ZAPŁONO.ZA20 140 E21 REP.ZM20/14 | 1 |
| 1095 | 13019357 | ФОТОРЕЗИСТОР D-LX100 EK-S (IR)<br>HÜCRE D-LX100 EK-S (IR) | CELULA D-LX100 EK-S (IR) | FOTOKOMÓRKA D-LX100 EK-S (IR) | 1 |
| | 65312274 | ФОТОРЕЗИСТОР FFS08-UV1 659D31 - 5M W/O<br>HÜCRE FFS08-UV1 659D31 - 5M W/O | FOTOCÉLULA FFS08-UV1 659D31 - 5M W/O | FOTOKOMÓRKA FFS08-UV1 659D31 - 5M W/O | 1 |
| 1100 | 65311472 | ЗЕРКАЛО/ГЛАЗОК ДЛЯ КОНТРОЛЯ ПЛАМЕНИ<br>AYNA/GÖZETLEME CAMI | ESPELHO/VIGIA | LUSTRO/WZIERNIK | 1 |
| 1110 | 65311595 | РЕЛЕ ДАВ. ВОЗДУХА LGW 50 A2P 2,5-50MB<br>HAVA BASINÇ ŞALT. LGW 50 A2P 2,5-50MB | PRESSOSTATO AR LGW 50 A2P 2,5-50MB | CZUJNIK CIŚ. POW. LGW 50 A2P 2,5-50MB | 1 |
| 1120 | 65310688 | ГАЗОВЫЙ КЛАПАН СОБР. D100 Z05 Z<br>GAZ KLAPESI BIRL. D100 Z05 Z | VÁLVULA DE GAS MONT. D100 Z05 Z | ZAWÓR GAZU ZŁO. D100 Z05 Z | 1 |
| 1130 | 65311659 | ПРОКЛАДОЧНОЕ КОЛЬЦО SW13X55<br>PASPAYI SW13X55 | ESPAÇADOR SW13X55 | ROZPÓRKA SW13X55 | 1 |
| 1140 | 65311658 | ДЕРЖАТЕЛЬ СЕРВОДВИГАТЕЛЬ/ГАЗОВЫЙ КЛАПАН<br>DESTEĞI SERVOMOTOR / GAZ KLAPESI | SUPORTE SERVOMOTOR / VÁLVULA DE GAS | WSPORNIK SERWOMOTOR / ZAWÓR GAZU | 1 |
| 1150 | 65311660 | СЦЕПЛЕНИЕ ГАЗОВЫЙ КЛАП./СЕРВОДВИГАТЕ.STE<br>KAPLİN GAZ KLAPESI/SERVOMOTOR STE N8-N9 | ACOPLAMENTO VÁLVULA GAS/SERVOM.STE N8-N9 | ŁĄCZNIK ZAWÓR GAZU/SERWOMOTOR STE N8-N9 | 1 |
| 1160 | 65311650 | СЕРВОДВИГАТЕ STE4,5 Q3.51/6+КАБЕЛЬ L3000<br>SERVOMOTOR STE 4,5 Q3.51/6+KABLOSU L3000 | SERVOMOTOR STE 4,5 Q3.51/6+CABO L3000 | SERWOMOTOR STE 4,5 Q3.51/6+PRZEWÓD L3000 | 1 |
| | 65311833 | СЕРВОДВИГАТЕЛЬ STM 40 Q15.51/8 2NR<br>SERVOMOTOR STM 40 Q15.51/8 2NR | SERVOMOTOR STM 40 Q15.51/8 2NR | SERWOMOTOR STM 40 Q15.51/8 2NR | 1 |
| 1170 | 65326333 | ЭЛЕКТРОДВИГАТЕ.11KW 400/690V D42 IE3 ЧЕ.<br>MOTORU 11KW 400/690V D42 IE3 ELV SIYAH | MOTOR 11KW 400/690V D42 IE3 ELV PRETO | SILNIK 11KW 400/690V D42 IE3 ELV CZARNY | 1 |
| | 65326334 | ЭЛЕКТРОДВИГАТЕ.15KW 400/690V D42 IE3 ЧЕ.<br>MOTORU 15KW 400/690V D42 IE3 ELV SIYAH | MOTOR 15KW 400/690V D42 IE3 ELV PRETO | SILNIK 15KW 400/690V D42 IE3 ELV CZARNY | 1 |
| | 65326335 | ЭЛЕКТРОДВИГА.18,5KW 400/690V D42 IE3 ЧЕ.<br>MOTORU 18,5KW 400/690V D42 IE3 ELV SIYAH | MOTOR 18,5KW 400/690V D42 IE3 ELV PRETO | SILNIK 18,5KW 400/690V D42 IE3 ELV CZAR. | 1 |
| | 65326336 | ЭЛЕКТРОДВИГАТЕ.22KW 400/690V D48 IE3 ЧЕ.<br>MOTORU 22KW 400/690V D48 IE3 ELV SIYAH | MOTOR 22KW 400/690V D48 IE3 ELV PRETO | SILNIK 22KW 400/690V D48 IE3 ELV CZARNY | 1 |
| 1180 | 65311502 | МАГНИТ FIX КОЖУХ ГОРЕЛКИ<br>MAGNET FIX KAPAGI BRULOR | IMAN FIX COBERTURA QUEIMADOR | MAGNET FIX OSŁONA PALNIKA | 1 |
| 1190 | 65311714 | СВЯЗЬ СТЕРЖЕНЬ CS10 L200<br>BAĞLANTI ÇUBUĞU CS10 L200 | HASTE DO CONEXAO CS10 L200 | TRZPIEŃ POŁĄCZENIE CS10 L200 | 1 |
| 1200 | 65311686 | ОСЬ / ВОЗДУШНАЯ ЗАСЛОНКА D12X673 D4H7<br>AKSI / HAVA KLAPESI D12X673 D4H7 | HASTE / FLAP DE AR D12X673 D4H7 | OŚ/PRZEPUSTNICA POWIETRZA D12X673 D4H7 | 1 |

| | 6XXXXXXX | RU<br>TR | PT | PL | X |
|---|---|---|---|---|---|
| 1210 | 65311701 | ЗУБЧАТОЕ КОЛЕ.Z=100 M=1 BO=12MM/BORG.6MM<br>DIŞLI Z=100 M=1 BO=12MM /BORG. 6 MM | RODA DENTAD. Z=100 M=1 BO=12MM /BORG.6MM | KOŁO ZĘBATE Z=100 M=1 BO=12MM /BORG.6 MM | 1 |
| 1220 | 65311685 | ОСЬ / ВОЗДУШНАЯ ЗАСЛОНКА D12X670 D4H7<br>AKSI / HAVA KLAPESI D12X670 D4H7 | HASTE / FLAP DE AR D12X670 D4H7 | OŚ/PRZEPUSTNICA POWIETRZA D12X670 D4H7 | 1 |
| 1225 | 65311687 | ОСЬ/ВОЗДУШНАЯ ЗАСЛ. D12X705 M8+УКАЗАТЕЛЬ<br>AKSI / HAVA KLAPESI D12X705 M8+IŞARETÇI | HASTE / FLAP DE AR D12X705 M8 + PONTEIRO | OŚ/PRZEPUSTNICA POW.D12X705 M8 +WSKAŹNIK | 1 |
| 1226 | 65311688 | ОСЬ/ВОЗДУШНАЯ ЗАСЛОНКА D12X705+УКАЗАТЕЛЬ<br>AKSI / HAVA KLAPESI D12X705 + IŞARETÇI | HASTE / FLAP DE AR D12X705 + PONTEIRO | OŚ/PRZEPUSTNICA POW. D12X705 + WSKAŹNIK | 1 |
| 1230 | 65311684 | ВОЗДУШНАЯ ЗАСЛОНКА<br>HAVA KLAPESI | FLAP DE AR | PRZEPUSTNICA POWIETRZA | 1 |
| 1605 | 65311789 | АДАПТЕР BT300/DFM300 RAST5<br>ADAPTÖR BT300/DFM300 RAST5 | ADAPTADOR BT300/DFM300 RAST5 | ADAPTER BT300/DFM300 RAST5 | 1 |
| 1610 | 65311790 | МОДУЛЬ LCM100 (LSB-M 667R0500-1)<br>MODÜLÜ LCM100 (LSB-M 667R0500-1) | MÓDULO LCM100 (LSB-M 667R0500-1) | MODUL LCM100 (LSB-M 667R0500-1) | 1 |
| 1615 | 65311791 | МОДУЛЬ DFM300 (LSB-M 667R0600-1)<br>MODÜLÜ DFM300 (LSB-M 667R0600-1) | MÓDULO DFM300 (LSB-M 667R0600-1) | MODUL DFM300 (LSB-M 667R0600-1) | 1 |
| 1620 | 65311449 | ПРОХОДНАЯ КЛЕММА WAGO (СЕРАЯ) 2001-1401<br>DEVRE TERMINALI WAGO (GRI) 2001-1401 | BORNE DE PASAGEM WAGO (CINZA) 2001-1401 | ZACISK PRZELOTOWY WAGO (SZARY) 2001-1401 | 1 |
| 1625 | 65311447 | ПРОХОДНАЯ КЛЕММА WAGO (N) 2001-1404<br>DEVRE TERMINALI WAGO (N) 2001-1404 | BORNE DE PASAGEM WAGO (NEUTRO) 2001-1404 | ZACISK PRZELOTOWY WAGO (N) 2001-1404 | 1 |
| 1626 | 65311445 | ПРОХОДНАЯ КЛЕММА WAGO (PE) 2001-1407<br>DEVRE TERMINALI WAGO (PE) 2001-1407 | BORNE DE PASAGEM WAGO (PE) 2001-1407 | ZACISK PRZELOTOWY WAGO (PE) 2001-1407 | 1 |
| 1640 | 65311446 | ИНСТРУМЕНТЫ WAG 2009-309<br>İŞLETIM ARAC WAG 2009-309 | FERRAMENTA WAG 2009-309 | NARZĘD. D.PRZEŁĄCZANIA WAG 2009-309 | 1 |
| 1645 | 65311793 | ВЫКЛЮЧ. ЭЛЕКТРОДВ. SCH D 3-4kW LC1D09P7<br>KONTAKTOER MOTOR SCH D 3-4kW LC1D09P7 | CONTACTOR MOTOR SCH D 3-4kW LC1D09P7 | STYCZNIK SILNIK SCH D 3-4kW LC1D09P7 | 1 |
| 1650 | 65311794 | РАЗЪЕДИНИТ. ЭЛЕКТРОДВИГА. 3-4KW GV2ME14<br>DEVRE KESİCİ MOTOR 3-4KW GV2ME14 | DISJUNTOR MOTOR 3-4KW GV2ME14 | WYŁĄCZNIKI SILNIK 3-4KW GV2ME14 | 1 |
| 1651 | 65311795 | ВСПОМОГАТЕЛЬНЫЙ ПЕРЕКЛЮЧАТЕЛЬ GVAE11<br>YARDIMCI ANAHTARI GVAE11 | INTERRUPTOR AUXILIAR GVAE11 | PRZEŁĄCZNIK POMOCNICZY GVAE11 | 1 |
| 1655 | 65311796 | ПУСКАТЕЛЬ ДВИГАТЕЛЯ Y/D 18KW LC3D18AP7<br>MARŞ MOTORU Y/D 18KW LC3D18AP7 | ARRANCADOR MOTOR Y/D 18KW LC3D18AP7 | ROZRUSZ. SILNIKA Y/D 18KW LC3D18AP7 | 1 |
| | 65311797 | ПУСКАТЕЛЬ ДВИГАТЕЛЯ Y/D 22KW LC3D32AP7<br>MARŞ MOTORU Y/D 22KW LC3D32AP7 | ARRANCADOR MOTOR Y/D 22KW LC3D32AP7 | ROZRUSZ. SILNIKA Y/D 22KW LC3D32AP7 | 1 |
| | 65312015 | ПУСКАТЕЛЬ ДВИГАТЕЛЯ Y/D 11KW LC3D12AP7<br>MARŞ MOTORU Y/D 11KW LC3D12AP7 | ARRANCADOR MOTOR Y/D 11KW LC3D12AP7 | ROZRUSZ. SILNIKA Y/D 11KW LC3D12AP7 | 1 |
| 1660 | 65311798 | РАЗЪЕДИНИТ. ЭЛЕКТРОДВИ. 15KW GV2ME32<br>DEVRE KESİCİ MOTOR 15KW GV2ME32 | DISJUNTOR MOTOR 15KW GV2ME32 | WYŁĄCZNIKI SILNIK 15KW GV2ME32 | 1 |
| | 65311917 | РАЗЪЕДИНИТ. ЭЛЕКТРОДВИ. 22KW GV3P50<br>DEVRE KESİCİ MOTOR 22KW GV3P50 | DISJUNTOR MOTOR 22KW GV3P50 | WYŁĄCZNIKI SILNIK 22KW GV3P50 | 1 |
| | 65312018 | РАЗЪЕДИНИТ. ЭЛЕКТРОДВИ. 11KW GV2ME22<br>DEVRE KESİCİ MOTOR 11KW GV2ME22 | DISJUNTOR MOTOR 11KW GV2ME22 | WYŁĄCZNIKI SILNIK 11KW GV2ME22 | 1 |
| | 65312019 | РАЗЪЕДИНИТ. ЭЛЕКТРОДВИ. 18,5KW GV3P40<br>DEVRE KESİCİ MOTOR 18,5KW GV3P40 | DISJUNTOR MOTOR 18,5KW GV3P40 | WYŁĄCZNIKI SILNIK 18,5KW GV3P40 | 1 |
| 1661 | 65311795 | ВСПОМОГАТЕЛЬНЫЙ ПЕРЕКЛЮЧАТЕЛЬ GVAE11<br>YARDIMCI ANAHTARI GVAE11 | INTERRUPTOR AUXILIAR GVAE11 | PRZEŁĄCZNIK POMOCNICZY GVAE11 | 1 |
| 1665 | 65311919 | ШАССИ, 3 ДЕТАЛИ M22-A<br>EKIPMAN RAFI, 3 GÖZLÜ M22-A | SUPORTE DE APARELHO, 3 NIVEIS M22-A | WSPORNIK URZĄDZENIA, 3 POZIOMY M22-A | 1 |
| 1666 | 65311443 | ПРОХОДНАЯ КЛЕММА WAGO (СЕРАЯ) 2001-1201<br>DEVRE TERMINALI WAGO (GRI) 2001-1201 | BORNE DE PASAGEM WAGO (CINZA) 2001-1201 | ZACISK PRZELOTOWY WAGO (SZARY) 2001-1201 | 1 |
| 1667 | 65311444 | ПРОХОДНАЯ КЛЕММА WAGO (PE) 2001-1207<br>DEVRE TERMINALI WAGO (PE) 2001-1207 | BORNE DE PASAGEM WAGO (PE) 2001-1207 | ZACISK PRZELOTOWY WAGO (PE) 2001-1207 | 1 |
| 1670 | 65311920 | СВЕТОДИОДНЫЙ ЭЛЕМЕНТ, БЕЛЫЙ M22-CLED230<br>LED ELEMAN, BEYAZ M22-CLED230 | ELEMENTO LED, BRANCO M22-CLED230 | ELEMENT LED, BIAŁY M22-CLED230 | 1 |
| | 65311921 | РАЗМЫКАЮЩИЙ КОНТАКТ M22 -CK01<br>KILIT AÇMA KONTAK M22 -CK01 | CONTACTO NF M22 -CK01 | STYKI ROZWIERNE M22 -CK01 | 1 |
| | 65311922 | РАЗМЫКАЮЩИЙ ДВОЙНОЙ КОНТАКТ M22-CK02<br>ÇIFT KILIT AÇMA KONTAK M22-CK02 | CONTACTO DUPLO NF M22-CK02 | PODWÓJNE STYKI ROZWIERNE M22-CK02 | 1 |
| | 65311923 | ЗАМЫКАЮЩИЙ КОНТАКТ M22-CK10<br>KILIT KAPATMA KONTAK M22-CK10 | CONTACTO NA M22-CK10 | STYKI ZWIERNE M22-CK10 | 1 |
| | 65311924 | ЗАМЫКАЮЩИЙ ДВОЙНОЙ КОНТАКТ M22-CK20<br>ÇIFT KILIT KAPATMA KONTAK M22-CK20 | CONTACTO DUPLO NA M22-CK20 | PODWÓJNE STYKI ZWIERNE M22-CK20 | 1 |
| 1675 | 65312454 | БЛОК УПРАВЛЕНИЯ BT340 GL-E<br>KUTU BT340 GL-E | PROGRAMADOR BT340 GL-E | MODUŁ BT340 GL-E | 1 |
| 1676 | 65311926 | ЗАГЛУШКА X30-X34 667R0001<br>KÖR KAPAK X30-X34 667R0001 | TAMPA CEGA X30-X34 667R0001 | ZAŚLEPKA X30-X34 667R0001 | 1 |
| 1680 | 65311927 | ПРОХОДНАЯ КЛЕММА WAGO ОРАНЖЕВАЯ2001-1402<br>DEVRE TERMINALI WAGO (TURUNCU) 2001-1402 | BORNE DE PASAGEM WAGO LARANJA 2001-1402 | ZACISK PRZELOTOWY WAGO POMARA 2001-1402 | 1 |
| 1685 | 65311445 | ПРОХОДНАЯ КЛЕММА WAGO (PE) 2001-1407<br>DEVRE TERMINALI WAGO (PE) 2001-1407 | BORNE DE PASAGEM WAGO (PE) 2001-1407 | ZACISK PRZELOTOWY WAGO (PE) 2001-1407 | 1 |
| 1690 | 65311449 | ПРОХОДНАЯ КЛЕММА WAGO (СЕРАЯ) 2001-1401<br>DEVRE TERMINALI WAGO (GRI) 2001-1401 | BORNE DE PASAGEM WAGO (CINZA) 2001-1401 | ZACISK PRZELOTOWY WAGO (SZARY) 2001-1401 | 1 |

| | 6XXXXXXX | RU<br>TR | PT | PL | X |
|---|---|---|---|---|---|
| 1695 | 65311447 | ПРОХОДНАЯ КЛЕММА WAGO (N) 2001-1404<br>DEVRE TERMINALI WAGO (N) 2001-1404 | BORNE DE PASAGEM WAGO (NEUTRO) 2001-1404 | ZACISK PRZELOTOWY WAGO (N) 2001-1404 | 1 |
| 1700 | 65311451 | САЛБНИК M16<br>KABLO RAKORU M16 | PRENSAESTOPAS M16 | DŁAWNICA M16 | 1 |
| 1701 | 65311758 | САЛБНИК M20<br>KABLO RAKORU M20 | PRENSAESTOPAS M20 | DŁAWNICA M20 | 1 |
| | 65311759 | САЛБНИК M25<br>KABLO RAKORU M25 | PRENSAESTOPAS M25 | DŁAWNICA M25 | 1 |
| 1705 | 65311443 | ПРОХОДНАЯ КЛЕММА WAGO (СЕРАЯ) 2001-1201<br>DEVRE TERMINALI WAGO (GRI) 2001-1201 | BORNE DE PASAGEM WAGO (CINZA) 2001-1201 | ZACISK PRZELOTOWY WAGO (SZARY) 2001-1201 | 1 |
| 1710 | 65311441 | ПРОХОДНАЯ КЛЕММА WAGO ОРАНЖЕ. 2001-1202<br>DEVRE TERMINALI WAGO (TURUNCU)2001-1202 | BORNE DE PASAGEM WAGO LARANJA 2001-1202 | ZACISK PRZELOTOWY WAGO POMARA 2001-1202 | 1 |
| 1715 | 65311931 | АВТОМАТИЧЕСКИЙ ВЫКЛЮЧАТЕЛЬ<br>EMNIYET OTOMATI?I | DISJUNTOR AUTOMÁTICO 1P SCHNEIDER 23614 | BEZPIECZNIK AUTOMATYCZNY 1P SCHNEIDER 23 | 1 |
| 1716 | 65311932 | КЛЕММНАЯ КОЛОДКА WAGO STRG. N6-9 GL-E BT<br>TERMINAL BLOĞU WAGO STRG. N6-9 GL-E BT | BLOCO TERMINAL WAGO STRG. N6-9 GL-E BT | LISTWA ZACISKOWA WAGO STRG. N6-9 GL-E BT | 1 |
| 1720 | 65311933 | САЛБНИК M32X1,5<br>KABLO BEZI M32X1,5 | PRENSAESTOPAS M32X1,5 | DŁAWNICA M32X1,5 | 1 |
| | 65311934 | САЛБНИК M40X1,5<br>KABLO BEZI M40X1,5 | PRENSAESTOPAS M40X1,5 | DŁAWNICA M40X1,5 | 1 |
| 1725 | 65311935 | РЕДУКТОР SKINDICHT KU-M M40x1,5/32X1.5<br>REDÜKTÖR SKINDICHT KU-M M40x1,5/32X1.5 | REDUTOR SKINDICHT KU-M M40x1,5/32X1.5 | REDUKTOR SKINDICHT KU-M M40x1,5/32X1.5 | 1 |
| 1730 | 65311936 | КОНТРГАЙКА M40X1,5<br>KILIT SOMUNU M40X1,5 | CONTRAPORCA M40X1,5 | LOKÓWKA M40X1,5 | 1 |
| 1731 | 65311937 | ПРОХОДНАЯ КЛЕММА WAGO (СЕРАЯ) 2010-1301<br>DEVRE TERMINALI WAGO (GRI) 2010-1301 | BORNE DE PASAGEM WAGO (CINZA) 2010-1301 | ZACISK PRZELOTOWY WAGO (SZARY) 2010-1301 | 1 |
| | 65311938 | ПРОХОДНАЯ КЛЕММА WAGO (СЕРАЯ) 2016-1301<br>DEVRE TERMINALI WAGO (GRI) 2016-1301 | BORNE DE PASAGEM WAGO (CINZA) 2016-1301 | ZACISK PRZELOTOWY WAGO (SZARY) 2016-1301 | 1 |
| | 65312106 | ПРОХОДНАЯ КЛЕММА WAGO (СЕРАЯ) 2006-1301<br>DEVRE TERMINALI WAGO (GRI) 2006-1301 | BORNE DE PASAGEM WAGO (CINZA) 2006-1301 | ZACISK PRZELOTOWY WAGO (SZARY) 2006-1301 | 1 |
| 1732 | 65311939 | ПРОХОДНАЯ КЛЕММА WAGO (PE) 2016-1307<br>DEVRE TERMINALI WAGO (PE) 2016-1307 | BORNE DE PASAGEM WAGO (PE) 2016-1307 | ZACISK PRZELOTOWY WAGO (PE) 2016-1307 | 1 |
| | 65312040 | ПРОХОДНАЯ КЛЕММА WAGO (PE) 2010-1307<br>DEVRE TERMINALI WAGO (PE) 2010-1307 | BORNE DE PASAGEM WAGO (PE) 2010-1307 | ZACISK PRZELOTOWY WAGO (PE) 2010-1307 | 1 |
| | 65312107 | ПРОХОДНАЯ КЛЕММА WAGO (PE) 2006-1307<br>DEVRE TERMINALI WAGO (PE) 2006-1307 | BORNE DE PASAGEM WAGO (PE) 2006-1307 | ZACISK PRZELOTOWY WAGO (PE) 2006-1307 | 1 |
| 1735 | 65311436 | СВЕТЯЩАЯСЯ КНОПКА, 3-ПОЗ., С<br>IŞIKLI SEÇIM TUŞU, 3 KADEMELI | INTERRUPTOR RETROILLUM., 3 POS.,BLOQU. | PODŚWIETLANY PRZYCISK WYBORU, 3-STOP., B | 1 |
| 1740 | 65311437 | СВЕТЯЩАЯСЯ КНОПКА, 3-ПОЗ., С<br>IŞIKLI SEÇIM TUŞU, 3 KADEMELI | INTERRUPTOR RETROILLUM., 3 POS.,BLOQU. | PODŚWIETLANY PRZYCISK WYBORU, 3-STOP., B | 1 |
| 1745 | 65326869 | ДИСПЛЕЙ БЛОКА УПРАВЛЕНИЯ BT3XX<br>EKRAN KUTU BT3XX | VISOR UNIDADE DE CONTROLE BT3XX | WYŚWIETLACZ MODUŁ BT3XX | 1 |
| 1750 | 65311364 | ПРОКЛАДКА/ДИСПЛЕЙ 152/140X80/70X2<br>CONTASI/EKRAN 152/140X80/70X2 | GAXETA/VISOR 152/140X80/70X2 | USZCZELKA/WYŚWIETLACZ 152/140X80/70X2 | 1 |
| 1755 | 65311438 | СВЕТЯЩАЯСЯ КНОПКА, 2-ПОЗ., СФИКСАЦИЕЙ<br>IŞIKLI SEÇIM TUŞU, 2 KADEMELI | INTERRUPTOR RETROILLUM., 2 POS.,BLOQU. | PODŚWIETLANY PRZYCISK WYBORU, 2-STOP., B | 1 |
| 2020 | 65312078 | СОПЛО ГОРЕЛКИ D369/400/320 L617<br>BRÜLÖR BORUSU D369/400/320 L617 | TUBO DO QUEIMADOR D369/400/320 L617 | RURA PALNIKA D369/400/320 L617 | 1 |
| | 65312079 | СОПЛО ГОРЕЛКИ D369/400/320 L757<br>BRÜLÖR BORUSU D369/400/320 L757 | TUBO DO QUEIMADOR D369/400/320 L757 | RURA PALNIKA D369/400/320 L757 | 1 |
| | 65312080 | СОПЛО ГОРЕЛКИ D369/400/320 L897<br>BRÜLÖR BORUSU D369/400/320 L897 | TUBO DO QUEIMADOR D369/400/320 L897 | RURA PALNIKA D369/400/320 L897 | 1 |
| | 65312081 | СОПЛО ГОРЕЛКИ D369/415/351 L638<br>BRÜLÖR BORUSU D369/415/351 L638 | TUBO DO QUEIMADOR D369/415/351 L638 | RURA PALNIKA D369/415/351 L638 | 1 |
| | 65312082 | СОПЛО ГОРЕЛКИ D369/415/351 L778<br>BRÜLÖR BORUSU D369/415/351 L778 | TUBO DO QUEIMADOR D369/415/351 L778 | RURA PALNIKA D369/415/351 L778 | 1 |
| | 65312083 | СОПЛО ГОРЕЛКИ D369/415/351 L918<br>BRÜLÖR BORUSU D369/415/351 L918 | TUBO DO QUEIMADOR D369/415/351 L918 | RURA PALNIKA D369/415/351 L918 | 1 |
| | 65312084 | СОПЛО ГОРЕЛКИ D431,5/373 L408<br>BRÜLÖR BORUSU D431,5/373 L408 | TUBO DO QUEIMADOR D431,5/373 L408 | RURA PALNIKA D431,5/373 L408 | 1 |
| | 65312085 | СОПЛО ГОРЕЛКИ D431,5/373 L558<br>BRÜLÖR BORUSU D431,5/373 L558 | TUBO DO QUEIMADOR D431,5/373 L558 | RURA PALNIKA D431,5/373 L558 | 1 |
| | 65312086 | СОПЛО ГОРЕЛКИ D431,5/373 L708<br>BRÜLÖR BORUSU D431,5/373 L708 | TUBO DO QUEIMADOR D431,5/373 L708 | RURA PALNIKA D431,5/373 L708 | 1 |
| 2110 | 65311881 | ДЕФЛЕКТОР D330/74 BEF.230MM<br>DEFLEKTOR D330/74 BEF.230MM | DEFLECTOR D330/74 BEF.230MM | DEFLEKTOR D330/74 BEF.230MM | 1 |
| | 65312087 | ДЕФЛЕКТОР D320/74X67 20SL<br>DEFLEKTOR D320/74X67 20SL | DEFLECTOR D320/74X67 20SL | DEFLEKTOR D320/74X67 20SL | 1 |
| | 65312088 | ДЕФЛЕКТОР D300/74X67 20SL<br>DEFLEKTOR D300/74X67 20SL | DEFLECTOR D300/74X67 20SL | DEFLEKTOR D300/74X67 20SL | 1 |
| 2120 | 65312089 | ГАЗОВЫЕ ДИФФУЗОРЫ СТАБИЛИЗАЦИЯ D=13<br>STABILIZASYON GAZ DIFÜZÖRLER D=13 | DIFUSOR GAS DE ESTABILIZAÇÃO D=13 | DYSZ GAZU STABILIZACJA D=13 | 1 |

| | 6XXXXXXX | RU<br>TR | PT | PL | X |
|---|---|---|---|---|---|
| 2130 | 65312090 | ГАЗОВЫЕ ДИФФУЗОРЫ УГЛОВАЯ D=20<br>AÇISAL GAZ DIFÜZÖRLER D=20 | DIFUSOR GAS ANGULAR D=20 | KĄTOWE DYSZ GAZU D=20 | 1 |
| | 65312091 | ГАЗОВЫЕ ДИФФУЗОРЫ УГЛОВАЯ D=22<br>AÇISAL GAZ DIFÜZÖRLER D=22 | DIFUSOR GAS ANGULAR D=22 | KĄTOWE DYSZ GAZU D=22 | 1 |
| 2145 | 65312094 | ЗАТВОР ТРУБКА ГАЗОВЫЕ D30<br>GAZ TUPLU TAPA D30 | OBTURADOR TUBO GAS D30 | MIGAWKA BORUSU GAZOWY D30 | 1 |
| 2150 | 65311710 | ТРУБКА ГАЗОВЫЕ D35X2,2X360 GRL.<br>GAZ TUPLU D35X2,2X360 GRL. | TUBO GAS D35X2,2X360 GRL. | BORUSU GAZOWY D35X2,2X360 GRL. | 1 |
| | 65312092 | ГАЗОВЫЕ ДИФФУЗОРЫ УГЛОВАЯ D35/24X56/245<br>AÇISAL GAZ DIFÜZÖRLER D35/24X56/245 | DIFUSOR GAS ANGULAR D35/24X56/245 | KĄTOWE DYSZ GAZU D35/24X56/245 | 1 |
| | 65312093 | ГАЗОВЫЕ ДИФФУЗОРЫ УГЛОВАЯ D35/27X35/245<br>AÇISAL GAZ DIFÜZÖRLER D35/27X35/245 | DIFUSOR GAS ANGULAR D35/27X35/245 | KĄTOWE DYSZ GAZU D35/27X35/245 | 1 |
| | 65312095 | ТРУБКА ГАЗОВЫЕ D35X2,2X300<br>GAZ TUPLU D35X2,2X300 | TUBO GAS D35X2,2X300 | BORUSU GAZOWY D35X2,2X300 | 1 |
| 2160 | 65311702 | ТРУБКА ГАЗОВЫЕ D35X2,2X360<br>GAZ TUPLU D35X2,2X360 | TUBO GAS D35X2,2X360 | BORUSU GAZOWY D35X2,2X360 | 1 |
| | 65311882 | ТРУБКА ГАЗОВЫЕ D35X2,2X257 РЕГУЛИРУЕМЫЙ<br>GAZ TUPLU D35X2,2X257 AYARLANABILIR | TUBO GAS D35X2,2X257 AJUSTÁVEL | BORUSU GAZOWY D35X2,2X257 NASTAWNY | 1 |
| 2170 | 65311683 | ГАЗОВЫЕ ДИФФУЗОРЫ D30x2/D12x1,5<br>GAZ DIFÜZOERÜ D30x2/D12x1,5 | BICO DE GÁS D30x2/D12x1,5 | DYSZA GAZU D30x2/D12x1,5 | 1 |
| | 65312096 | ГАЗОВЫЕ ДИФФУЗОРЫ D30X2/10X1,5X103<br>GAZ DIFÜZÖRLER D30X2/10X1,5X103 | DIFUSOR GAS D30X2/10X1,5X103 | DYSZ GAZU D30X2/10X1,5X103 | 1 |
| 2171 | 65312013 | ГАЗОВЫЕ ДИФФУЗОРЫ D30X2/D12X1 L73<br>GAZ DIFÜZÖRLER D30X2/D12X1 L73 | DIFUSOR GAS D30X2/D12X1 L73 | DYSZ GAZU D30X2/D12X1 L73 | 1 |
| 2180 | 65311712 | ГАЗОВЫЙ ТРУБКА D35X2.2X45GR.<br>GAZ TUPLU D35X2.2X45GR. | TUBO GAS D35X2.2X45GR. | BORUSU GAZOWY D35X2.2X45GR. | 1 |
| | 65312097 | ТРУБКА ГАЗОВЫЕ D35X2,2X220/50<br>GAZ TUPLU D35X2,2X220/50 | TUBO GAS D35X2,2X220/50 | BORUSU GAZOWY D35X2,2X220/50 | 1 |
| | 65312098 | ТРУБКА ГАЗОВЫЕ D35X2,2X100/35<br>GAZ TUPLU D35X2,2X100/35 | TUBO GAS D35X2,2X100/35 | BORUSU GAZOWY D35X2,2X100/35 | 1 |
| 2200 | 1728777751 | КАБЕЛЬ РОЗЖИГАD6,4/D6,4 L1500 AP<br>ATEŞLEME KABLOSU D6,4/D6,4 L1500 AP | CABO ENCENDIDO D6,4/D6,4 L1500 AP | PRZEWÓD ALU. D6,4/D6,4 L1500 AP | 1 |
| 2201 | 65310724 | КАБЕЛЬ РОЗЖИГАD4/SAT 72750<br>ATEŞLEME KABLOSU D4/SAT 72750 | CABO ENCENDIDO D4/SAT 72750 | PRZEWÓD ALU. D4/SAT 72750 | 1 |
| 2210 | 65311662 | ДЕРЖАТЕЛЬ ЭЛЕКТРОД<br>DESTEĞI ELEKTROD | SUPORTE ELETRODO | WSPORNIK ELEKTRODA | 1 |
| 2230 | 65311690 | ЭЛЕКТРОД ЗАЖИ. D11X100 D6,4 D2,5X59 45°<br>ATEŞLEYICI ELEKT.D11X100 D6,4D2,5X59 45° | ELETRODO ENC. D11X100 D6,4 D2,5X59 45° | ELEKTRODA ALU. D11X100 D6,4 D2,5X59 45° | 1 |
| | 65313846 | ЭЛЕКТРОД ЗАЖИ.D11X100D6,4D2,5X150 27/90°<br>ATEŞLEYICI EL.D11X100D6,4D2,5X150 27/90° | ELETRODO ENC. D11X100D6,4D2,5X150 27/90° | ELEKTRODA ALU.D11X100D6,4D2,5X150 27/90° | 1 |
| 2250 | 65311713 | ПРОКЛАДКА/OVAL ФЛАНЕЦ 210X160X2 D116<br>CONTASI/OVAL FLANŞI 210X160X2 D116 | GAXETA/OVAL FLANGE 210X160X2 D116 | USZCZELKA/OVAL KOŁNIERZ 210X160X2 D116 | 1 |
| 2260 | 65312022 | ЦЕНТРИРОВАНИЯ СТОЛБ N8/EKEVO8<br>MERKEZLEME AYAĞI N8/EKEVO8 | PILAR DE CENTRAGEM N8/EKEVO8 | CENTROWANIE FILAR N8/EKEVO8 | 1 |
| | 65312023 | ЦЕНТРИРОВАНИЯ СТОЛБ N9/EKEVO9<br>MERKEZLEME AYAĞI N9/EKEVO9 | PILAR DE CENTRAGEM N9/EKEVO9 | CENTROWANIE FILAR N9/EKEVO9 | 1 |
| 2320 | 65312099 | ЦЕНТРИРОВАНИЕ ЛИНИЯ ФОРСУНКИ DM35<br>MERKEZLEME PÜSKÜRTME MEMESI HATTI DM35 | CIMBRE LÍNEA DE BOQUILLA DM35 | KRĄŻYNA UKŁAD DYSZY DM35 | 1 |
| 2330 | 65312100 | ДЕРЖАТЕЛЬ ЦЕНТРИРОВАНИЯ СТОЛБ<br>DESTEĞI MERKEZLEME AYAĞI | SUPORTE PILAR DE CENTRAGEM | WSPORNIK CENTROWANIE FILAR | 1 |
| 2350 | 1728703262 | ЭЛЕКТРОД ЗАЖИ. D11X220D3X150 20° L150 D4<br>ATEŞLEYI.ELEKT.D11X220D3X150 20° L150 D4 | ELETRODO ENC. D11X220 D3X150 20° L150 D4 | ELEKTROD.ALU. D11X220 D3X150 20° L150 D4 | 1 |
| 2360 | 65312141 | ЦЕНТРИРУЮЩЕЕ КОЛЬЦО<br>MERKEZLEME HALKASI | ANEL DE CENTRAGEM | PIERŚCIEŃ CENTRUJĄCY | 1 |
| 2380 | 65310280 | ЛИНИЯ ФОРСУНКИ RDG 1250D35 L860<br>PÜSKÜRTME MEM.HATTI RDG 1250D35 L860 | LÍNEA DE BOQUILLA RDG 1250D35 L860 | UKŁAD DYSZY RDG 1250D35 L860 | 1 |
| | 65311817 | ЛИНИЯ ФОРСУНКИ RDG 1250D35 L760<br>PÜSKÜRTME MEM.HATTI RDG 1250D35 L760 | LÍNEA DE BOQUILLA RDG 1250D35 L760 | UKŁAD DYSZY RDG 1250D35 L760 | 1 |
| | 65311818 | ЛИНИЯ ФОРСУНКИ RDG 1250D35 L960<br>PÜSKÜRTME MEM.HATTI RDG 1250D35 L960 | LÍNEA DE BOQUILLA RDG 1250D35 L960 | UKŁAD DYSZY RDG 1250D35 L960 | 1 |
| | 65311884 | ЛИНИЯ ФОРСУНКИ RDG1250 L660<br>PÜSKÜRTME MEMESI HATTI RDG1250 L660 | LÍNEA DE BOQUILLA RDG1250 L660 | UKŁAD DYSZY RDG1250 L660 | 1 |
| | 65312102 | ЛИНИЯ ФОРСУНКИ D35 L560<br>PÜSKÜRTME MEM.HATTI D35 L560 | LÍNEA DE BOQUILLA D35 L560 | UKŁAD DYSZY D35 L560 | 1 |
| 2490 | 65311435 | ШЛАНГ DN16 L500<br>ESNEK DN16 L500 | FLEXIVEL DN16 L500 | PRZEWÓD GIĘTKI DN16 L500 | 1 |
| 2810 | 65311406 | НАСОСНЫЙ АГРЕГА.SMG1630-I-4-SO-IE3 30BAR<br>POMPA ÜNITESI SMG1630-I-4-SO-IE3 30BAR | GRUPO DE BOMBA SMG1630-I-4-SO-IE3 30BAR | AGREGAT POMPY SMG1630-I-4-SO-IE3 30BAR | 1 |
| | 65312103 | НАСОСНЫЙ АГРЕГА.SMG1631-I-4-SO-IE3 30BAR<br>POMPA ÜNITESI SMG1631-I-4-SO-IE3 30BAR | GRUPO DE BOMBA SMG1631-I-4-SO-IE3 30BAR | AGREGAT POMPY SMG1631-I-4-SO-IE3 30BAR | 1 |
| 2815 | 65311407 | ЭЛЕКТРОДВИГ.3KW 230/400V D28 1400T/MN GM<br>MOTORU 3KW 230/400V D28 1400 TR/MN GMP | MOTOR 3KW 230/400V D28 1400 TR/MN GMP | SILNIK 3KW 230/400V D28 1400 TR/MN GMP | 1 |

| | 6XXXXXXX | RU<br>TR | PT | PL | X |
|---|---|---|---|---|---|
| | 65312104 | ЭЛЕКТРОДВИГ.4KW400/690VD28 1400TR/MN IE3<br>MOTORU 4KW400/690V D28 1400TR/MN GMP IE3 | MOTOR 4KW400/690V D28 1400TR/MN GMP IE3 | SILNIK 4KW400/690V D28 1400TR/MN GMP IE3 | 1 |
| 2820 | 1238795399 | СЦЕПЛЕНИЕ D24/28 PW DM18/MW<br>KAPLİN D24/28 PW DM18/MW | ACOPLAMENTO D24/28 PW DM18/MW | ŁĄCZNIK D24/28 PW DM18/MW | 1 |
| | 1238795402 | СЦЕПЛЕНИЕ D28/38 PW DM22/MW<br>KAPLİN D28/38 PW DM22/MW | ACOPLAMENTO D28/38 PW DM22/MW | ŁĄCZNIK D28/38 PW DM22/MW | 1 |
| 2821 | 1238795424 | СЦЕПЛЕНИЕ D24/28 GMP<br>KAPLİN D24/28 GMP | ACOPLAMENTO D24/28 GMP | ŁĄCZNIK D24/28 GMP | 1 |
| | 1238795435 | СЦЕПЛЕНИЕ D28/38<br>KAPLİN D28/38 | ACOPLAMENTO D28/38 | ŁĄCZNIK D28/38 | 1 |
| 2825 | 65311410 | НАСОС VBHRG I 410 SO 1700L/H<br>POMPA VBHRG I 410 SO 1700L/H | BOMBA VBHRG I 410 SO 1700L/H | POMPA VBHRG I 410 SO 1700L/H | 1 |
| | 65312105 | НАСОС VBHRG 2200L/H<br>POMPA VBHRG 2200L/H | BOMBA VBHRG 2200L/H | POMPA VBHRG 2200L/H | 1 |
| 2826 | 13019380 | КОМПЛЕКТ ПРОКЛАДОК / НАСОС D18<br>CONTA SETI / POMPASI D18 | CONJUNTO DE GAXETAS / BOMBA D18 | ZESTAW USZCZELNIAJĄCY / POMPA D18 | 1 |
| | 5788707026 | КОМПЛЕКТ ПРОКЛАДОК D22<br>CONTA SETI D22 | CONJUNTO DE GAXETAS D22 | ZESTAW USZCZELNIAJĄCY D22 | 1 |
| 2830 | 13022666 | ЭЛЕКТРОКЛАПАН LUC 321F2523 P8 PG11 19W<br>ELECTROVANA LUC 321F2523 P8 PG11 19W | ELECTROVALVULA LUC 321F2523 P8 PG11 19W | ELEKTROZAWOR LUC 321F2523 P8 PG11 19W | 1 |
| | 13022667 | ЭЛЕКТРОКЛАПАН LUC 121F2523 P8 PG11 19W<br>ELECTROVANA LUC 121F2523 P8 PG11 19W | ELECTROVALVULA LUC 121F2523 P8 PG11 19W | ELEKTROZAWOR LUC 121F2523 P8 PG11 19W | 1 |
| 2840 | 65311572 | МАНОМЕТР ГЛИЦЕРИН D 63 0-40 BAR G1/4<br>GLISERIN MANOMETRE D 63 0-40 BAR G1/4 | MANOMETRO GLICERINA D 63 0-40 BAR G1/4 | MANOMETR GLICERYNA D 63 0-40 BAR G1/4 | 1 |
| 2850 | 65311831 | ПРОКЛАДОЧНОЕ КОЛЬЦО M6/M8X42 SW15<br>PASPAYI M6/M8X42 SW15 | ESPAÇADOR M6/M8X42 SW15 | ROZPÓRKA M6/M8X42 SW15 | 1 |
| 2860 | 65311412 | ПЛАСТИНА СЕРВОДВИГАТЕЛЬ STE<br>SERVOMOTOR STE PLAKA | PRATO DO SERVOMOTOR STE | PŁYTA SERWOMOTOR STE | 1 |
| 2870 | 65311650 | СЕРВОДВИГАТЕ STE4,5 Q3.51/6+КАБЕЛЬ L3000<br>SERVOMOTOR STE 4,5 Q3.51/6+KABLOSU L3000 | SERVOMOTOR STE 4,5 Q3.51/6+CABO L3000 | SERWOMOTOR STE 4,5 Q3.51/6+PRZEWÓD L3000 | 1 |
| | 65311833 | СЕРВОДВИГАТЕЛЬ STM 40 Q15.51/8 2NR<br>SERVOMOTOR STM 40 Q15.51/8 2NR | SERVOMOTOR STM 40 Q15.51/8 2NR | SERWOMOTOR STM 40 Q15.51/8 2NR | 1 |
| 2880 | 65312206 | РЕЛЕ ДАВ. ВОЗДУХА DSB 158 F931 3-25BAR<br>YAKIT BASINÇ ŞALT. DSB 158 F931 3-25BAR | PRESSOSTATO FUEL DSB 158 F931 3-25BAR | CZUJNIK CIŚ.OLEJU OP.DSB158 F931 3-25BAR | 1 |
| 2890 | 65311616 | ПРОКЛАДКА GDM 3-21<br>CONTASI GDM 3-21 | GAXETA GDM 3-21 | USZCZELKA GDM 3-21 | 1 |
| 2900 | 65311615 | РАЗЪЕМ GDMW 30-11 DF<br>PRIZ GDMW 30-11 DF | TOMADA GDMW 30-11 DF | GNIAZDO GDMW 30-11 DF | 1 |
| 2910 | 13019342 | ШЛАНГ M30X1,5 DN20 L=1500<br>ESNEK M30X1,5 DN20 L=1500 | FLEXIVEL M30X1,5 DN20 L=1500 | PRZEWÓD GIĘTKI M30X1,5 DN20 L=1500 | 1 |
| | 1488436955 | ШЛАНГ M38X1,5 DN25 L=1500<br>ESNEK M38X1,5 DN25 L=1500 | FLEXIVEL M38X1,5 DN25 L=1500 | PRZEWÓD GIĘTKI M38X1,5 DN25 L=1500 | 1 |
| 2920 | 65311414 | Т-ШТУЦЕР R1Z (ФИЛЬТР) OVE<br>T-RAKOR R1Z (FILTRE) OVE | UNIÃO EM T R1Z (FILTRO) OVE | T-ZŁĄCZE R1Z (FILTR) OVE | 1 |
| | 65311578 | ФИЛЬТР ТОПЛИВА RP3/4 PN16<br>YAKIT FILTRESI RP3/4 PN16 | FILTRO FUEL RP3/4 PN16 | FILTR OLEJU RP3/4 PN16 | 1 |
| 3005 | 65311613 | ПРОКЛАДКА/ГАЗОВАЯ РАМПА D162/115X2 DN100<br>CONTASI/GAZ RAMPASI D162/115X2 DN100 | GAXETA/RAMPA DE GAS D162/115X2 DN100 | USZCZELKA/RAMPA GAZOWA D162/115X2 DN100 | 1 |
| 3010 | 65311678 | КОЛЛЕКТОР DN100-R2Z 2G1/4 PN16<br>MANIFOLD DN100-R2Z 2G1/4 PN16 | COLETOR DN100-R2Z 2G1/4 PN16 | KOLEKTOR DN100-R2Z 2G1/4 PN16 | 1 |
| 3020 | 65311606 | ПРЯМОЙ ШТУЦЕР P-GEV 8LR-WD-VI<br>SAĞ RAKOR P-GEV 8LR-WD-VI | UNIÃO DIREITA P-GEV 8LR-WD-VI | ZŁĄCZE PRAWE P-GEV 8LR-WD-VI | 1 |
| 3030 | 65311604 | УГЛОВОЙ ШТУЦЕР P-EWV 8-L<br>DIRSEKLI RAKOR P-EWV 8-L | UNIÃO COTOVELO P-EWV 8-L | ZŁĄCZKA TYPU KOLANKO P-EWV 8-L | 1 |
| 3040 | 65311579 | ШТУЦЕР ОТБОРА ДАВЛЕНИЯ R1/4Z+УПЛОТ.<br>BASINÇ GIRIŞI R1/4Z+CONTA | TOMADA DE PRESSÃO R1/4Z+JUNTA | GNIAZ. POMIARU CIŚNIEN. R1/4Z+USZCZEL | 1 |
| 3060 | 65311581 | ГАЗОВЫЙ КЛАПАН VGD20 5011 RP2"<br>GAZ VANASI VGD20 5011 RP2" | VALVULA GAS VGD20 5011 RP2" | ZAWÓR GAZOWY VGD20 5011 RP2" | 1 |
| 3070 | 65107100 | СЕРВОДВИГАТЕЛЬ SKP25.003 E2 БЕЗ КОНЦЕВЫ<br>SERVOMOTOR SKP 25.003 E2 LIMIT ANAHTAR | SERVOMOT. GÁS SKP25.003 E2 SEM FIM CURSO | SERWOSILNIK SKP25.003E2 BEZ WYŁĄCZNIKI | 1 |
| 3080 | 65311585 | СОЕДИНИТЕЛ.КАБЕЛЬ AGA 62 PLUG DIN L270<br>BAĞLANTI KABLOSU AGA 62 PLUG DIN L270 | CABO DE CONEXÃO AGA 62 TOMADA DIN L270 | POŁĄCZENIOW. KABEL AGA 62 PLUG DIN L270 | 1 |
| 3090 | 1478836180 | СЕРВОДВИГАТЕЛЬ SKP15.000E2 БЕЗ КОНЦЕВЫ<br>SERVOMOTOR SKP15.000E2 LIMIT ANAHTAR | SERVOMOTOR GAS SKP15.000E2 SEM FIM CURSA | SERWOSILNIK SKP15.000E2 BEZ WYŁĄCZNIKI | 1 |
| 3110 | 65311377 | ФЛАНЕЦ AGF10.50 RP2<br>FLANŞI AGF10.50 RP2 | FLANGE AGF10.50 RP2 | KOŁNIERZ AGF10.50 RP2 | 1 |
| 3120 | 65310852 | РЕЛЕ ДАВ. ВОЗДУХА GW 500 A5 30-500MB<br>GAZ BASINÇ ŞALT. GW 500 A5 30-500MB | PRESSOSTATO GÁS GW 500 A5 30-500MB | CZUJNIK CIŚ. GAZU GW 500 A5 30-500MB | 1 |
| | 65323022 | РЕЛЕ ДАВ. ВОЗДУХА GW 150 A6 5-150MB DIN<br>GAZ BASINÇ ŞALT. GW 150 A6 5-150MB DIN | PRESSOSTATO GAS GW 150 A6 5-150MB DIN | CZUJNIK CIŚ. GAZU GW 150 A6 5-150MB DIN | 1 |
| 3130 | 65311586 | ГНЕЗДОВОЙ РАЗЪЕМ AGA64<br>DİŞİ PRIZ AGA64 | TOMADA FÊMEA AGA64 | GNIAZDO AGA64 | 1 |

| | 6XXXXXXX | RU<br>TR | PT | PL | X |
|---|---|---|---|---|---|
| 3140 | 65311615 | РАЗЪЕМ GDMW 30-11 DF<br>PRIZ GDMW 30-11 DF | TOMADA GDMW 30-11 DF | GNIAZDO GDMW 30-11 DF | 1 |
| 3300 | 65311459 | ГАЗОВЫЙ ФИЛЬТР GF80M-1616-A-1 RP2 1BAR<br>GAZ FILTR. GF80M-1616-A-1 RP2 1BAR | FILTRO GÁS GF80M-1616-A-1 RP2 1BAR | FILTR GAZU GF80M-1616-A-1 RP2 1BAR | 1 |
| 3301 | 65311361 | ФИЛЬТРУЮЩИЙ ЭЛЕМЕНТ RP 1 1/2+O-RING<br>FİLTRE ELEMANI RP 1 1/2+O-RING | ELEMENTO FILTRANTE RP 1 1/2+O-RING | WKŁAD FILTRA RP 1 1/2+O-RING | 1 |
| 3505 | 65311613 | ПРОКЛАДКА/ГАЗОВАЯ РАМПА D162/115X2 DN100<br>CONTASI/GAZ RAMPASI D162/115X2 DN100 | GAXETA/RAMPA DE GAS D162/115X2 DN100 | USZCZELKA/RAMPA GAZOWA D162/115X2 DN100 | 1 |
| 3510 | 65311973 | КОЛЛЕКТОР DN100 / R2<br>MANIFOLD DN100 / R2 | COLETOR DN100 / R2 | KOLEKTOR DN100 / R2 | 1 |
| 3580 | 65311840 | ГАЗОВЫЙ КЛАПАН MBC1200SES82RP2'' 5-80MB<br>GAZ VANA. MBC1200 SE S82 RP2'' 5-80 MB | VÁLVULA GÁS MBC1200 SE S82 RP2'' 5-80MBA | ZAWÓR GAZ. MBC1200SES82 RP2'' 5-80MB | 1 |
| 3620 | 65313022 | ФЛАНЕЦ MBC700/1200 RP2<br>FLANŞI MBC700/1200 RP2 | FLANGE MBC700/1200 RP2 | KOŁNIERZ MBC700/1200 RP2 | 1 |
| 3640 | 65310852 | РЕЛЕ ДАВ. ВОЗДУХА GW 500 A5 30-500MB<br>GAZ BASINÇ ŞALT. GW 500 A5 30-500MB | PRESSOSTATO GÁS GW 500 A5 30-500MB | CZUJNIK CIŚ. GAZU GW 500 A5 30-500MB | 1 |
| | 65311598 | РЕЛЕ ДАВ. ВОЗДУХА GW 150 A5 30-150MB<br>GAZ BASINÇ ŞALT. GW 150 A5 30-150MB | PRESSOSTATO GAS GW 150 A5 30-150MB | CZUJNIK CIŚ. GAZU GW 150 A5 30-150MB | 1 |
| 3650 | 65311615 | РАЗЪЕМ GDMW 30-11 DF<br>PRIZ GDMW 30-11 DF | TOMADA GDMW 30-11 DF | GNIAZDO GDMW 30-11 DF | 1 |
| 3700 | 13022417 | ФИЛЬТРУЮЩИЙ ЭЛЕМЕНТ MBC 1200<br>FİLTRE ELEMANI MBC 1200 | ELEMENTO FILTRANTE MBC 1200 | WKŁAD FILTRA MBC 1200 | 1 |
| 3800 | 65311459 | ГАЗОВЫЙ ФИЛЬТР GF80M-1616-A-1 RP2 1BAR<br>GAZ FILTR. GF80M-1616-A-1 RP2 1BAR | FILTRO GÁS GF80M-1616-A-1 RP2 1BAR | FILTR GAZU GF80M-1616-A-1 RP2 1BAR | 1 |
| 3801 | 65311361 | ФИЛЬТРУЮЩИЙ ЭЛЕМЕНТ RP 1 1/2+O-RING<br>FİLTRE ELEMANI RP 1 1/2+O-RING | ELEMENTO FILTRANTE RP 1 1/2+O-RING | WKŁAD FILTRA RP 1 1/2+O-RING | 1 |
| 4005 | 65311613 | ПРОКЛАДКА/ГАЗОВАЯ РАМПА D162/115X2 DN100<br>CONTASI/GAZ RAMPASI D162/115X2 DN100 | GAXETA/RAMPA DE GAS D162/115X2 DN100 | USZCZELKA/RAMPA GAZOWA D162/115X2 DN100 | 1 |
| 4010 | 65311674 | КОЛЛЕКТОР DN100/DN65<br>MANIFOLD DN100/DN65 | COLETOR DN100/DN65 | KOLEKTOR DN100/DN65 | 1 |
| | 65311675 | КОЛЛЕКТОР DN100-DN80 PN16<br>MANIFOLD DN100-DN80 PN16 | COLETOR DN100-DN80 PN16 | KOLEKTOR DN100-DN80 PN16 | 1 |
| | 65311676 | КОЛЛЕКТОР DN100/DN100<br>MANIFOLD DN100/DN100 | COLETOR DN100/DN100 | KOLEKTOR DN100/DN100 | 1 |
| | 65311677 | КОЛЛЕКТОР DN100/DN125<br>MANIFOLD DN100/DN125 | COLETOR DN100/DN125 | KOLEKTOR DN100/DN125 | 1 |
| 4020 | 65311601 | ПРЯМОЙ ШТУЦЕР P-EGES 12L/R 1/4WD<br>SAĞ RAKOR P-EGES 12L/R 1/4WD | CONEXÃO DIREITA P-EGES 12L/R 1/4WD | ZŁĄCZE PRAWE P-EGES 12L/R 1/4WD | 1 |
| 4030 | 65311608 | ШТУЦЕР (ЛОКОТЬ) P-EWV12L-SV<br>RAKOR (DIRSEK) P-EWV12L-SV | UNIÃO (COTOVELO) P-EWV12L-SV | ZŁĄCZE (ŁOKIEĆ) P-EWV12L-SV | 1 |
| 4040 | 65311605 | ШТУЦЕР P-KV12L<br>RAKOR P-KV12L | CONEXÃO P-KV12L | ZŁĄCZE P-KV12L | 1 |
| 4060 | 65311607 | КРЫШКА D15/10X21 VSD 12L/S O.M.MB<br>TAPA D15/10X21 VSD 12L/S O.M.MB | TAMPA D15/10X21 VSD 12L/S O.M.MB | NAKRĘTKA D15/10X21 VSD 12L/S O.M.MB | 1 |
| 4070 | 65311601 | ПРЯМОЙ ШТУЦЕР P-EGES 12L/R 1/4WD<br>SAĞ RAKOR P-EGES 12L/R 1/4WD | CONEXÃO DIREITA P-EGES 12L/R 1/4WD | ZŁĄCZE PRAWE P-EGES 12L/R 1/4WD | 1 |
| 4080 | 65311453 | ГАЗОВЫЙ КЛАПАН VGD40 125 DN125<br>GAZ VANASI VGD40 125 DN125 | VALVULA GAS VGD40 125 DN125 | ZAWÓR GAZOWY VGD40 125 DN125 | 1 |
| | 65311583 | ГАЗОВЫЙ КЛАПАН VGD40 080 DN80<br>GAZ VANASI VGD40 080 DN80 | VALVULA GAS VGD40 080 DN80 | ZAWÓR GAZOWY VGD40 080 DN80 | 1 |
| | 65311590 | ГАЗОВЫЙ КЛАПАН VGD40 100 DN100<br>GAZ VANASI VGD40 100 DN100 | VALVULA GAS VGD40 100 DN100 | ZAWÓR GAZOWY VGD40 100 DN100 | 1 |
| | 65323661 | ГАЗОВЫЙ КЛАПАН VGD40 065 DN65<br>GAZ VANASI VGD40 065 DN65 | VÁLVULA GÁS VGD40 065 DN65 | ZAWÓR GAZOWY VGD40 065 DN65 | 1 |
| 4090 | 65107100 | СЕРВОДВИГАТЕЛЬ SKP25.003 E2 БЕЗ КОНЦЕВЫ<br>SERVOMOTOR SKP 25.003 E2 LIMIT ANAHTAR | SERVOMOT. GÁS SKP25.003 E2 SEM FIM CURSO | SERWOSILNIK SKP25.003E2 BEZ WYŁĄCZNIKI | 1 |
| 4100 | 65311585 | СОЕДИНИТЕЛ.КАБЕЛЬ AGA 62 PLUG DIN L270<br>BAĞLANTI KABLOSU AGA 62 PLUG DIN L270 | CABO DE CONEXÃO AGA 62 TOMADA DIN L270 | POŁĄCZENIOW. KABEL AGA 62 PLUG DIN L270 | 1 |
| 4110 | 1478836180 | СЕРВОДВИГАТЕЛЬ SKP15.000E2 БЕЗ КОНЦЕВЫ<br>SERVOMOTOR SKP15.000E2 LIMIT ANAHTAR | SERVOMOTOR GAS SKP15.000E2 SEM FIM CURSA | SERWOSILNIK SKP15.000E2 BEZ WYŁĄCZNIKI | 1 |
| 4120 | 65311611 | ПРОКЛАДКА/ГАЗОВАЯ РАМПА D127/77X2 DN65<br>CONTASI/GAZ RAMPASI D127/77X2 DN65 | GAXETA/RAMPA DE GAS D127/77X2 DN65 | USZCZELKA/RAMPA GAZOWA D127/77X2 DN65 | 1 |
| | 65311612 | ПРОКЛАДКА/ГАЗОВАЯ РАМПА D142/90X2 DN80<br>CONTASI/GAZ RAMPASI D142/90X2 DN80 | GAXETA/RAMPA DE GAS D142/90X2 DN80 | USZCZELKA/RAMPA GAZOWA D142/90X2 DN80 | 1 |
| | 65311613 | ПРОКЛАДКА/ГАЗОВАЯ РАМПА D162/115X2 DN100<br>CONTASI/GAZ RAMPASI D162/115X2 DN100 | GAXETA/RAMPA DE GAS D162/115X2 DN100 | USZCZELKA/RAMPA GAZOWA D162/115X2 DN100 | 1 |
| | 65311614 | ПРОКЛАДКА/ГАЗОВАЯ РАМПА D192/141X2 DN125<br>CONTASI/GAZ RAMPASI D192/141X2 DN125 | GAXETA/RAMPA DE GAS D192/141X2 DN125 | USZCZELKA/RAMPA GAZOWA D192/141X2 DN125 | 1 |
| 4130 | 65311586 | ГНЕЗДОВОЙ РАЗЪЕМ AGA64<br>DİŞİ PRIZ AGA64 | TOMADA FÊMEA AGA64 | GNIAZDO AGA64 | 1 |
| 4140 | 65311615 | РАЗЪЕМ GDMW 30-11 DF<br>PRIZ GDMW 30-11 DF | TOMADA GDMW 30-11 DF | GNIAZDO GDMW 30-11 DF | 1 |

| | 6XXXXXXX | RU<br>TR | PT | PL | X |
|---|---|---|---|---|---|
| 4150 | 65310852 | РЕЛЕ ДАВ. ВОЗДУХА GW 500 A5 30-500MB<br>GAZ BASINÇ ŞALT. GW 500 A5 30-500MB | PRESSOSTATO GÁS GW 500 A5 30-500MB | CZUJNIK CIŚ. GAZU GW 500 A5 30-500MB | 1 |
| | 65323022 | РЕЛЕ ДАВ. ВОЗДУХА GW 150 A6 5-150MB DIN<br>GAZ BASINÇ ŞALT. GW 150 A6 5-150MB DIN | PRESSOSTATO GAS GW 150 A6 5-150MB DIN | CZUJNIK CIŚ. GAZU GW 150 A6 5-150MB DIN | 1 |
| 4300 | 65311460 | ГАЗОВЫЙ ФИЛЬТР GF65MF-2020-A-1 DN65 1BAR<br>GAZ FILTR. GF65MF-2020-A-1 DN65 1BAR | FILTRO GÁS GF65MF-2020-A-1 DN65 1BAR | FILTR GAZU GF65MF-2020-A-1 DN65 1BAR | 1 |
| | 65311461 | ГАЗОВЫЙ ФИЛЬТР GF80MF-2424-A-1 DN80 1BAR<br>GAZ FILTR. GF80MF-2424-A-1 DN80 1BAR | FILTRO GÁS GF80MF-2424-A-1 DN80 1BAR | FILTR GAZU GF80MF-2424-A-1 DN80 1BAR | 1 |
| | 65311462 | ГАЗОВЫЙ ФИЛЬТР GF100MF-3232-A-1 DN100 1B<br>GAZ FILTR. GF100MF-3232-A-1 DN100 1BAR | FILTRO GÁS GF100MF-3232-A-1 DN100 1BAR | FILTR GAZU GF100MF-3232-A-1 DN100 1BAR | 1 |
| | 65311463 | ГАЗОВЫЙ ФИЛЬТР GF125MF-4040-A-1 DN125 1B<br>GAZ FILTR. GF125MF-4040-A-1 DN125 1BAR | FILTRO GÁS GF125MF-4040-A-1 DN125 1BAR | FILTR GAZU GF125MF-4040-A-1 DN125 1BAR | 1 |
| 4301 | 65311723 | ФИЛЬТРУЮЩИЙ ЭЛЕМЕНТ GF 65 MF<br>FİLTRE ELEMANI GF 65 MF | ELEMENTO FILTRANTE GF 65 MF | WKŁAD FILTRA GF 65 MF | 1 |
| | 65311888 | ФИЛЬТРУЮЩИЙ ЭЛЕМЕНТ GF 80 MF<br>FİLTRE ELEMANI GF 80 MF | ELEMENTO FILTRANTE GF 80 MF | WKŁAD FILTRA GF 80 MF | 1 |
| | 65311889 | ФИЛЬТРУЮЩИЙ ЭЛЕМЕНТ GF 100 MF<br>FİLTRE ELEMANI GF 100 MF | ELEMENTO FILTRANTE GF 100 MF | WKŁAD FILTRA GF 100 MF | 1 |
| | 65311890 | ФИЛЬТРУЮЩИЙ ЭЛЕМЕНТ GF 125 MF<br>FİLTRE ELEMANI GF 125 MF | ELEMENTO FILTRANTE GF 125 MF | WKŁAD FILTRA GF 125 MF | 1 |
| 4505 | 65311613 | ПРОКЛАДКА/ГАЗОВАЯ РАМПА D162/115X2 DN100<br>CONTASI/GAZ RAMPASI D162/115X2 DN100 | GAXETA/RAMPA DE GAS D162/115X2 DN100 | USZCZELKA/RAMPA GAZOWA D162/115X2 DN100 | 1 |
| 4510 | 65311674 | КОЛЛЕКТОР DN100/DN65<br>MANIFOLD DN100/DN65 | COLETOR DN100/DN65 | KOLEKTOR DN100/DN65 | 1 |
| | 65311675 | КОЛЛЕКТОР DN100-DN80 PN16<br>MANIFOLD DN100-DN80 PN16 | COLETOR DN100-DN80 PN16 | KOLEKTOR DN100-DN80 PN16 | 1 |
| | 65311676 | КОЛЛЕКТОР DN100/DN100<br>MANIFOLD DN100/DN100 | COLETOR DN100/DN100 | KOLEKTOR DN100/DN100 | 1 |
| 4520 | 65311601 | ПРЯМОЙ ШТУЦЕР P-EGES 12L/R 1/4WD<br>SAĞ RAKOR P-EGES 12L/R 1/4WD | CONEXÃO DIREITA P-EGES 12L/R 1/4WD | ZŁĄCZE PRAWE P-EGES 12L/R 1/4WD | 1 |
| 4530 | 65311344 | Т-ШТУЦЕР P-TV 12 L<br>T-RAKOR P-TV 12 L | CONEXÃO EM T P-TV 12 L | T-ZŁĄCZKA P-TV 12 L | 1 |
| 4560 | 65311607 | КРЫШКА D15/10X21 VSD 12L/S O.M.MB<br>TAPA D15/10X21 VSD 12L/S O.M.MB | TAMPA D15/10X21 VSD 12L/S O.M.MB | NAKRĘTKA D15/10X21 VSD 12L/S O.M.MB | 1 |
| 4580 | 65311844 | ГАЗОВЫЙ КЛАПАН MBC1900SEDN65 40-80MBAR<br>GAZ VANASI MBC1900SE DN65 40-80 MBAR | VÁLVULA GÁS MBC1900SE DN65 40-80MBAR | ZAWÓR GAZ. MBC1900SE DN65 40-80 MBAR | 1 |
| | 65311845 | ГАЗОВЫЙ КЛАПАН MBC3100SE DN80 40-80MBAR<br>GAZ VANASI MBC3100SE DN80 40-80 MBAR | VÁLVULA GÁS MBC3100 SE DN80 40-80 MBAR | ZAWÓR GAZ. MBC3100SE DN80 40-80 MBAR | 1 |
| | 65311846 | ГАЗОВЫЙ КЛАПАН MBC5000SE DN100 40-80MB<br>GAZ VANASI MBC5000 SE DN100 40-80 MB | VÁLVULA GÁS MBC5000 SE DN100 40-80 MBAR | ZAWÓR GAZ.MBC5000SE DN100 40-80MBAR | 1 |
| 4620 | 65311611 | ПРОКЛАДКА/ГАЗОВАЯ РАМПА D127/77X2 DN65<br>CONTASI/GAZ RAMPASI D127/77X2 DN65 | GAXETA/RAMPA DE GAS D127/77X2 DN65 | USZCZELKA/RAMPA GAZOWA D127/77X2 DN65 | 1 |
| | 65311612 | ПРОКЛАДКА/ГАЗОВАЯ РАМПА D142/90X2 DN80<br>CONTASI/GAZ RAMPASI D142/90X2 DN80 | GAXETA/RAMPA DE GAS D142/90X2 DN80 | USZCZELKA/RAMPA GAZOWA D142/90X2 DN80 | 1 |
| | 65311613 | ПРОКЛАДКА/ГАЗОВАЯ РАМПА D162/115X2 DN100<br>CONTASI/GAZ RAMPASI D162/115X2 DN100 | GAXETA/RAMPA DE GAS D162/115X2 DN100 | USZCZELKA/RAMPA GAZOWA D162/115X2 DN100 | 1 |
| 4640 | 65310852 | РЕЛЕ ДАВ. ВОЗДУХА GW 500 A5 30-500MB<br>GAZ BASINÇ ŞALT. GW 500 A5 30-500MB | PRESSOSTATO GÁS GW 500 A5 30-500MB | CZUJNIK CIŚ. GAZU GW 500 A5 30-500MB | 1 |
| | 65323022 | РЕЛЕ ДАВ. ВОЗДУХА GW 150 A6 5-150MB DIN<br>GAZ BASINÇ ŞALT. GW 150 A6 5-150MB DIN | PRESSOSTATO GAS GW 150 A6 5-150MB DIN | CZUJNIK CIŚ. GAZU GW 150 A6 5-150MB DIN | 1 |
| 4650 | 65311615 | РАЗЪЕМ GDMW 30-11 DF<br>PRIZ GDMW 30-11 DF | TOMADA GDMW 30-11 DF | GNIAZDO GDMW 30-11 DF | 1 |
| 4800 | 65311460 | ГАЗОВЫЙ ФИЛЬТР GF65MF-2020-A-1 DN65 1BAR<br>GAZ FILTR. GF65MF-2020-A-1 DN65 1BAR | FILTRO GÁS GF65MF-2020-A-1 DN65 1BAR | FILTR GAZU GF65MF-2020-A-1 DN65 1BAR | 1 |
| | 65311461 | ГАЗОВЫЙ ФИЛЬТР GF80MF-2424-A-1 DN80 1BAR<br>GAZ FILTR. GF80MF-2424-A-1 DN80 1BAR | FILTRO GÁS GF80MF-2424-A-1 DN80 1BAR | FILTR GAZU GF80MF-2424-A-1 DN80 1BAR | 1 |
| | 65311462 | ГАЗОВЫЙ ФИЛЬТР GF100MF-3232-A-1 DN100 1B<br>GAZ FILTR. GF100MF-3232-A-1 DN100 1BAR | FILTRO GÁS GF100MF-3232-A-1 DN100 1BAR | FILTR GAZU GF100MF-3232-A-1 DN100 1BAR | 1 |
| 4801 | 65311723 | ФИЛЬТРУЮЩИЙ ЭЛЕМЕНТ GF 65 MF<br>FİLTRE ELEMANI GF 65 MF | ELEMENTO FILTRANTE GF 65 MF | WKŁAD FILTRA GF 65 MF | 1 |
| | 65311888 | ФИЛЬТРУЮЩИЙ ЭЛЕМЕНТ GF 80 MF<br>FİLTRE ELEMANI GF 80 MF | ELEMENTO FILTRANTE GF 80 MF | WKŁAD FILTRA GF 80 MF | 1 |
| | 65311889 | ФИЛЬТРУЮЩИЙ ЭЛЕМЕНТ GF 100 MF<br>FİLTRE ELEMANI GF 100 MF | ELEMENTO FILTRANTE GF 100 MF | WKŁAD FILTRA GF 100 MF | 1 |
| 5001 | 1458645325 | ФОРСУНКА BER 350KG 55° CBM<br>PÜSK. MEMESI BER 350KG 55° CBM | BOQUILLA BER 350KG 55° CBM | DYSZA BER 350KG 55° CBM | 1 |
| | 1458645347 | ФОРСУНКА BER 400KG 55° CBM<br>PÜSK. MEMESI BER 400KG 55° CBM | BOQUILLA BER 400KG 55° CBM | DYSZA BER 400KG 55° CBM | 1 |
| | 1458698846 | ФОРСУНКА DZ1000 750KG 80° M14 1-5<br>PÜSK. MEMESI DZ1000 750KG 80° M14 1-5 | BOQUILLA DZ1000 750KG 80° M14 1-5 | DYSZA DZ1000 750KG 80° M14 1-5 | 1 |
| | 1458698891 | ФОРСУНКА DZ1000 1000KG 80° M14 1-5<br>PÜSK. MEMESI DZ1000 1000KG 80° M14 1-5 | BOQUILLA DZ1000 1000KG 80° M14 1-5 | DYSZA DZ1000 1000KG 80° M14 1-5 | 1 |

| | 6XXXXXXX | RU<br>TR | PT | PL | X |
|---|---|---|---|---|---|
| | 65311201 | ФОРСУНКА DZ1000 950KG 80° M14 1-5<br>PÜSK. MEMESI DZ1000 950KG 80° M14 1-5 | BOQUILLA DZ1000 950KG 80° M14 1-5 | DYSZA DZ1000 950KG 80° M14 1-5 | 1 |
| | 65312421 | ФОРСУНКА DZ1000 800KG 80° M14 1-5<br>PÜSK. MEMESI DZ1000 800KG 80° M14 1-5 | BOQUILLA DZ1000 800KG 80° M14 1-5 | DYSZA DZ1000 800KG 80° M14 1-5 | 1 |
| | 65313182 | ФОРСУНКА BER 275KG 55° CBM<br>PÜSK. MEMESI BER 275KG 55° CBM | BOQUILLA BER 275KG 55° CBM | DYSZA BER 275KG 55° CBM | 1 |
| | 65313183 | ФОРСУНКА BER 300KG 55° CBM<br>PÜSK. MEMESI BER 300KG 55° CBM | BOQUILLA BER 300KG 55° CBM | DYSZA BER 300KG 55° CBM | 1 |
| | 65313184 | ФОРСУНКА BER 450KG 55° CBM<br>PÜSK. MEMESI BER 450KG 55° CBM | BOQUILLA BER 450KG 55° CBM | DYSZA BER 450KG 55° CBM | 1 |
| | 65313185 | ФОРСУНКА BER 500KG 55° CBM<br>PÜSK. MEMESI BER 500KG 55° CBM | BOQUILLA BER 500KG 55° CBM | DYSZA BER 500KG 55° CBM | 1 |
| | 65313186 | ФОРСУНКА BER 600KG 55° CBM<br>PÜSK. MEMESI BER 600KG 55° CBM | BOQUILLA BER 600KG 55° CBM | DYSZA BER 600KG 55° CBM | 1 |
| | 65313190 | ФОРСУНКА DZ1000 900KG 80° M14 1-5<br>PÜSK. MEMESI DZ1000 900KG 80° M14 1-5 | BOQUILLA DZ1000 900KG 80° M14 1-5 | DYSZA DZ1000 900KG 80° M14 1-5 | 1 |
| | 65313851 | ФОРСУНКА BER 550KG 55° CBM<br>PÜSK. MEMESI BER 550KG 55° CBM | BOQUILLA BER 550KG 55° CBM | DYSZA BER 550KG 55° CBM | 1 |
| | 65313852 | ФОРСУНКА DZ1000 550KG 80° M14 1-5<br>PÜSK. MEMESI DZ1000 550KG 80° M14 1-5 | BOQUILLA DZ1000 550KG 80° M14 1-5 | DYSZA DZ1000 550KG 80° M14 1-5 | 1 |
| | 65313853 | ФОРСУНКА DZ1000 700KG 80° M14 1-5<br>PÜSK. MEMESI DZ1000 700KG 80° M14 1-5 | BOQUILLA DZ1000 700KG 80° M14 1-5 | DYSZA DZ1000 700KG 80° M14 1-5 | 1 |
| | 65313854 | ФОРСУНКА DZ1000 650KG 80° M14 1-5<br>PÜSK. MEMESI DZ1000 650KG 80° M14 1-5 | BOQUILLA DZ1000 650KG 80° M14 1-5 | DYSZA DZ1000 650KG 80° M14 1-5 | 1 |
| | 65313855 | ФОРСУНКА DZ1000 850KG 80° M14 1-5<br>PÜSK. MEMESI DZ1000 850KG 80° M14 1-5 | BOQUILLA DZ1000 850KG 80° M14 1-5 | DYSZA DZ1000 850KG 80° M14 1-5 | 1 |
| 5002 | 65312447 | БЛОК УПРАВЛЕНИЯ BT340 ОСН.НАСТР-КИ<br>KUTU BT340 TEMEL AYARI | PROGRAMADOR BT340 CONFIGUR. BÁSICA | MODUŁ BT340 USTAWIENIE PODSTAWOWE | 1 |
| | 65312450 | БЛОК УПРА. BT340 ОПРЕДЕЛ. ПАРАМ.<br>KUTU BT340 ÖZEL AYAR | PROGRAMADOR BT340 CONF. ESPECÍFICA | MODUŁ BT340 SPECYFICZNE USTAWIENIE | 1 |
| | 65312455 | БЛОК УПРА. BT340 GL-EF3+БЕС.РЕГ.<br>KUTU BT340 GL-EF3+FREK.DÖNÜS. | PROGRAMADOR BT340 GL-EF3+CTL.FR. | MODUŁ BT340 GL-EF3+PRZET.CZEST. | 1 |
| 5010 | 65311362 | ИСПЫТАТЕЛЬНАЯ ГОРЕЛКА С КНОПКОЙ PB2<br>BASMA DÜĞMESİ İLE BRÜLÖR TEST PB2 | QUEIMADOR DE ENSAIO COM B. PRESSÃO PB2 | PALNIK TEST Z PRZYCISKIEM PB2 | 1 |
| 5020 | 65311918 | МОДУЛЬ VSM100 (LSB-M 667R0200-1)<br>VSM100 MODÜLÜ (LSB-M 667R0200-1) | MÓDULO VSM100 (LSB-M 667R0200-1) | MODUL VSM100 (LSB-M 667R0200-1) | 1 |
| 5042 | 65311940 | РЕЛЕ FIN 38.61.8.240.5060 KLL 1W FZ<br>RÖLE FIN 38.61.8.240.5060 KLL 1W FZ | RELE FIN 38.61.8.240.5060 KLL 1W FZ | PRZEKAŹNIK FIN 38.61.8.240.5060 KLL 1WFZ | 1 |
| 5070 | 65311937 | ПРОХОДНАЯ КЛЕММА WAGO (СЕРАЯ) 2010-1301<br>DEVRE TERMINALI WAGO (GRI) 2010-1301 | BORNE DE PASAGEM WAGO (CINZA) 2010-1301 | ZACISK PRZELOTOWY WAGO (SZARY) 2010-1301 | 1 |
| | 65311938 | ПРОХОДНАЯ КЛЕММА WAGO (СЕРАЯ) 2016-1301<br>DEVRE TERMINALI WAGO (GRI) 2016-1301 | BORNE DE PASAGEM WAGO (CINZA) 2016-1301 | ZACISK PRZELOTOWY WAGO (SZARY) 2016-1301 | 1 |
| 5071 | 65311939 | ПРОХОДНАЯ КЛЕММА WAGO (PE) 2016-1307<br>DEVRE TERMINALI WAGO (PE) 2016-1307 | BORNE DE PASAGEM WAGO (PE) 2016-1307 | ZACISK PRZELOTOWY WAGO (PE) 2016-1307 | 1 |
| 5080 | 65311793 | ВЫКЛЮЧ. ЭЛЕКТРОДВ. SCH D 3-4kW LC1D09P7<br>KONTAKTOER MOTOR SCH D 3-4kW LC1D09P7 | CONTACTOR MOTOR SCH D 3-4kW LC1D09P7 | STYCZNIK SILNIK SCH D 3-4kW LC1D09P7 | 1 |
| 5085 | 65311794 | РАЗЪЕДИНИТ. ЭЛЕКТРОДВИГА. 3-4KW GV2ME14<br>DEVRE KESİCİ MOTOR 3-4KW GV2ME14 | DISJUNTOR MOTOR 3-4KW GV2ME14 | WYŁĄCZNIKI SILNIK 3-4KW GV2ME14 | 1 |
| 5086 | 65311795 | ВСПОМОГАТЕЛЬНЫЙ ПЕРЕКЛЮЧАТЕЛЬ GVAE11<br>YARDIMCI ANAHTARI GVAE11 | INTERRUPTOR AUXILIAR GVAE11 | PRZEŁĄCZNIK POMOCNICZY GVAE11 | 1 |
| 5087 | 65311941 | ПРИВОДЫ ACH550 15KW<br>SÜRÜCÜLER ACH550 15KW | CONVERSOR FREQ. ACH550 15KW | PRZETWORNICA ACH550 15KW | 1 |
| | 65311942 | ПРИВОДЫ ACH550 22KW<br>SÜRÜCÜLER ACH550 22KW | CONVERSOR FREQ. ACH550 22KW | PRZETWORNICA ACH550 22KW | 1 |
| | 65312014 | ПРЕОБРАЗОВАТЕЛЬ ЧАСТОТЫ ACH550 - 11kW<br>FREKANS DÖNÜŞTÜRÜCÜ ACH550 - 11kW | CONVERSOR DE FREQUÊNCIA ACH550 - 11kW | PRZETWORNICA CZĘSTOTLIWOŚCI ACH550-11kW | 1 |
| | 65312021 | ПРИВОДЫ ACH550 18,5KW<br>SÜRÜCÜLER ACH550 18,5KW | CONVERSOR FREQ. ACH550 18,5KW | PRZETWORNICA ACH550 18,5KW | 1 |
| 5090 | 65311943 | ВЕНТИЛЯТОР ПРОВЕТ., ПРЕОБРАЗОВА. ЧАСТОТЫ<br>FREKANS INVERTÖRÜ IÇIN FAN | VENTILADOR CONVERSOR DE FREQUÊNCIA | PRZETWORNICA CZĘSTOTLIWOŚCI WENTYLATORA | 1 |
| 5091 | 65311944 | ФИЛЬТР ВЕНТИЛЯ. 177X177 EFA 200R5/ELDON<br>FILTRE HALAVAN. 177X177 EFA 200R5/ELDON | FILTRO VENTIL. 177X177 EFA 200R5 /ELDON | FILTR WENTYL. 177X177 EFA 200R5/ELDON | 1 |
| 5100 | 65312285 | РЕГУЛЯТОРА ДЕРЕВО 8.0 (CCW) GR.2<br>AĞAÇ DÜZENLEMESI 8.0 (CCW) GR.2 | VEIO DE REGULAÇÃO 8.0 (CCW) GR.2 | DRZEWO REGULACJA 8.0 (CCW) GR.2 | 1 |
| | 65312292 | РЕГУЛЯТОРА ДЕРЕВО 7.0 (CCW) GR.2<br>AĞAÇ DÜZENLEMESI 7.0 (CCW) GR.2 | VEIO DE REGULAÇÃO 7.0 (CCW) GR.2 | DRZEWO REGULACJA 7.0 (CCW) GR.2 | 1 |
| | 65312293 | РЕГУЛЯТОРА ДЕРЕВО 9.0 (CCW) GR.2<br>AĞAÇ DÜZENLEMESI 9.0 (CCW) GR.2 | VEIO DE REGULAÇÃO 9.0 (CCW) GR.2 | DRZEWO REGULACJA 9.0 (CCW) GR.2 | 1 |
| | 65312302 | РЕГУЛЯТОРА ДЕРЕВО 5.0 (CCW)<br>AĞAÇ DÜZENLEMESI 5.0 (CCW) | VEIO DE REGULAÇÃO 5.0 (CCW) | DRZEWO REGULACJA 5.0 (CCW) | 1 |
| | 65312303 | РЕГУЛЯТОРА ДЕРЕВО 6.0 (CCW)<br>AĞAÇ DÜZENLEMESI 6.0 (CCW) | VEIO DE REGULAÇÃO 6.0 (CCW) | DRZEWO REGULACJA 6.0 (CCW) | 1 |

| | 6XXXXXXX | RU<br>TR | PT | PL | X |
|---|---|---|---|---|---|
| | 65312304 | РЕГУЛЯТОРА ДЕРЕВО 7.0 (CCW)<br>AĞAÇ DÜZENLEMESI 7.0 (CCW) | VEIO DE REGULAÇÃO 7.0 (CCW) | DRZEWO REGULACJA 7.0 (CCW) | 1 |
| | 65312305 | РЕГУЛЯТОРА ДЕРЕВО 8.0 (CCW)<br>AĞAÇ DÜZENLEMESI 8.0 (CCW) | VEIO DE REGULAÇÃO 8.0 (CCW) | DRZEWO REGULACJA 8.0 (CCW) | 1 |
| 5110 | 65311439 | КЛЕММНАЯ КОЛОДКА WAGO STRG.N6-9GL-E/F3TB<br>TERMINAL BLOĞU WAGO STRG.N6-9 GL-E/F3 TB | BLOCO TERMINAL WAGO STRG.N6-9 GL-E/F3 TB | LISTWA ZACISKOWA WAGO STRG.N6-9GL-E/F3TB | 1 |
| 5111 | 65311440 | ПОДДЕРЖКА РАЗЪЕМА 3-6 MM<br>KONEKTÖR DESTEĞI 3-6 MM | SUPORTE DE CONECTOR 3-6 MM | UCHWYT ZŁĄCZA 3-6 MM | 1 |
| 5112 | 65311441 | ПРОХОДНАЯ КЛЕММА WAGO ОРАНЖЕ. 2001-1202<br>DEVRE TERMINALI WAGO (TURUNCU)2001-1202 | BORNE DE PASAGEM WAGO LARANJA 2001-1202 | ZACISK PRZELOTOWY WAGO POMARA 2001-1202 | 1 |
| 5113 | 65311442 | ПОДДЕРЖКА РАЗЪЕМА 6-8 MM<br>KONEKTÖR DESTEĞI 6-8 MM | SUPORTE DE CONECTOR 6-8 MM | UCHWYT ZŁĄCZA 6-8 MM | 1 |
| 5114 | 65311443 | ПРОХОДНАЯ КЛЕММА WAGO (СЕРАЯ) 2001-1201<br>DEVRE TERMINALI WAGO (GRI) 2001-1201 | BORNE DE PASAGEM WAGO (CINZA) 2001-1201 | ZACISK PRZELOTOWY WAGO (SZARY) 2001-1201 | 1 |
| 5115 | 65311444 | ПРОХОДНАЯ КЛЕММА WAGO (PE) 2001-1207<br>DEVRE TERMINALI WAGO (PE) 2001-1207 | BORNE DE PASAGEM WAGO (PE) 2001-1207 | ZACISK PRZELOTOWY WAGO (PE) 2001-1207 | 1 |
| 5116 | 65311445 | ПРОХОДНАЯ КЛЕММА WAGO (PE) 2001-1407<br>DEVRE TERMINALI WAGO (PE) 2001-1407 | BORNE DE PASAGEM WAGO (PE) 2001-1407 | ZACISK PRZELOTOWY WAGO (PE) 2001-1407 | 1 |
| 5117 | 65311446 | ИНСТРУМЕНТЫ WAG 2009-309<br>İŞLETIM ARAC WAG 2009-309 | FERRAMENTA WAG 2009-309 | NARZĘD. D.PRZEŁĄCZANIA WAG 2009-309 | 1 |
| 5118 | 65311447 | ПРОХОДНАЯ КЛЕММА WAGO (N) 2001-1404<br>DEVRE TERMINALI WAGO (N) 2001-1404 | BORNE DE PASAGEM WAGO (NEUTRO) 2001-1404 | ZACISK PRZELOTOWY WAGO (N) 2001-1404 | 1 |
| 5119 | 65311448 | ПРОХОДНАЯ КЛЕММА WAGO (N) 2001-1204<br>DEVRE TERMINALI WAGO (N) 2001-1204 | BORNE DE PASAGEM WAGO (NEUTRO) 2001-1204 | ZACISK PRZELOTOWY WAGO (N) 2001-1204 | 1 |
| 5120 | 65311449 | ПРОХОДНАЯ КЛЕММА WAGO (СЕРАЯ) 2001-1401<br>DEVRE TERMINALI WAGO (GRI) 2001-1401 | BORNE DE PASAGEM WAGO (CINZA) 2001-1401 | ZACISK PRZELOTOWY WAGO (SZARY) 2001-1401 | 1 |
| 5121 | 65311450 | ТЕСТОВАЯ НАГРУЗКА ETAMATIC 663R1199<br>TEST YÜKÜ ETAMATIC 663R1199 | CARGA DE TESTE ETAMATIC 663R1199 | OBCIĄŻENIE TESTOWE ETAMATIC 663R1199 | 1 |
| 5122 | 65311451 | САЛБНИК M16<br>KABLO RAKORU M16 | PRENSAESTOPAS M16 | DŁAWNICA M16 | 1 |
| | 65311758 | САЛБНИК M20<br>KABLO RAKORU M20 | PRENSAESTOPAS M20 | DŁAWNICA M20 | 1 |
| | 65311759 | САЛБНИК M25<br>KABLO RAKORU M25 | PRENSAESTOPAS M25 | DŁAWNICA M25 | 1 |
| 5123 | 65311786 | CLIC TOOL M16<br>CLIC TOOL M16 | CLIC TOOL M16 | CLIC TOOL M16 | 1 |
| | 65311787 | CLIC TOOL M20<br>CLIC TOOL M20 | CLIC TOOL M20 | CLIC TOOL M20 | 1 |
| | 65311788 | CLIC TOOL M25<br>CLIC TOOL M25 | CLIC TOOL M25 | CLIC TOOL M25 | 1 |
| 5150 | 1758811789 | ИСТОЧНИК ПИТАНИЯ ML30.100-24V DC<br>GÜÇ KAYNAĞI ML30.100-24V DC | FONTE DE ENERGIA ML30.100-24V DC | ZASILACZ ML30.100-24V DC | 1 |
| 5300 | 65114033 | РЕГУЛИРОВАНИЕ RWF 55.50A9<br>REGÜLATÖRÜ RWF 55.50A9 | REGULADOR RWF 55.50A9 | REGULATORA RWF 55.50A9 | 1 |

# ADDRESSES

**www.elco.net**

# LIST OF THE ABBREVIATIONS

: Maintenance parts / Pièces d'entretien / Materiali di consumo /
: Piezas de mantenimiento / Hilfsmaterial / Onderhoudsonderdelen

: Wearing parts / Pièces d'usure / Parti di usura
: Piezas de desgaste / Verschleissteile / Slijtageonderdelen

* : Item not stocked, manufactured to order / Article non stocké, fabrication à la demande /
: Articolo non a magazzino, produzione all'ordine / Artículo no almacenado, fabricación previa solicitud /
: Keine Lagerware, wird bei Bedarf bestellt, Artikel niet op voorraad, fabricage op bestelling

# IDENTIFICATION PLATE

## SERIAL NUMBER

**7 Characters :** 00001 / K A

- Sequencial number
- Trimester of manufacture : from A to D
- Year of manufacture : K → 2003, L → 2004, M → 2005, etc ...

**8 Characters :** 00001 / L 09

- Sequencial number
- Month of manufacture
- Year of manufacture : K → 2003, L → 2004, M → 2005, etc ...

**11 Characters :** 2007 1370 P 07

- Year of manufacture
- Month of manufacture
- Year of manufacture : P → 2007, R → 2008, S → 2009, T → 2010, U → 2011, W → 2012, X → 2013, Y → 2014, Z → 2015
- Sequencial number

**18 Characters :** 070115 000000000001

- Sequencial number
- Manufacturing day (07) / Month (01) / Year (15)

The indications mentionned on the prices, commercial or technical literature and the scheme are written for your guidance and are available at a given time. The CONSTRUCTOR retains the power to modify the presentation, the form, the size, the conception or the material of the products.